PERFORMANCE
MADE
SMARTER

Product Manual
6333
2-wire programmable transmitter

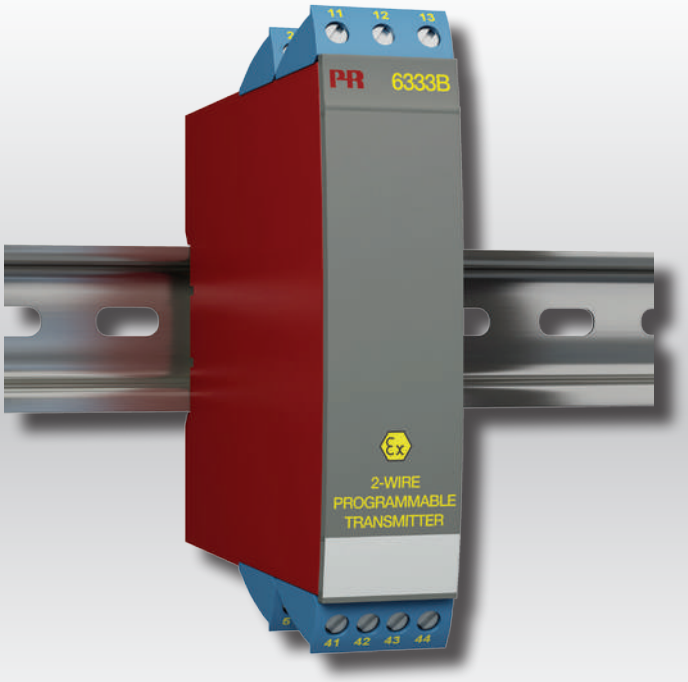

ATEX IECEx FM APPROVED C SA US EAC CE

TEMPERATURE | I.S. INTERFACES | COMMUNICATION INTERFACES | MULTIFUNCTIONAL | ISOLATION | DISPLAY

No. 6333V104-UK
From serial no.: 1517871082

PR electronics

6 Product Pillars
to meet your every need

Individually outstanding, unrivalled in combination

With our innovative, patented technologies, we make signal conditioning smarter and simpler. Our portfolio is composed of six product areas, where we offer a wide range of analog and digital devices covering over a thousand applications in industrial and factory automation. All our products comply with or surpass the highest industry standards, ensuring reliability in even the harshest of environments and have a 5-year warranty for greater peace of mind.



Our range of temperature transmitters and sensors provides the highest level of signal integrity from the measurement point to your control system. You can convert industrial process temperature signals to analog, bus or digital communications using a highly reliable point-to-point solution with a fast response time, automatic self-calibration, sensor error detection, low drift, and top EMC performance in any environment.



We deliver the safest signals by validating our products against the toughest safety standards. Through our commitment to innovation, we have made pioneering achievements in developing I.S. interfaces with SIL 2 Full Assessment that are both efficient and cost-effective. Our comprehensive range of analog and digital intrinsically safe isolation barriers offers multifunctional inputs and outputs, making PR an easy-to-implement site standard. Our backplanes further simplify large installations and provide seamless integration to standard DCS systems.



We provide inexpensive, easy-to-use, future-ready communication interfaces that can access your PR installed base of products. The detachable 4501 Local Operator Interface (LOI) allows for local monitoring of process values, device configuration, error detection and signal simulation. The next generation, our 4511 Remote Operator Interface (ROI) does all that and more, adding remote digital communications via Modbus/RTU, while the analog output signals are still available for redundancy.
With the 4511 you can further expand connectivity with a PR gateway, which connects via industrial Ethernet, wirelessly through a Wi-Fi router or directly with the devices using our Portable Plant Supervisor (PPS) application. The PPS app is available for iOS, Android and Windows.



Our unique range of single devices covering multiple applications is easily deployable as your site standard. Having one variant that applies to a broad range of applications can reduce your installation time and training, and greatly simplify spare parts management at your facilities. Our devices are designed for long-term signal accuracy, low power consumption, immunity to electrical noise and simple programming.



Our compact, fast, high-quality 6 mm isolators are based on microprocessor technology to provide exceptional performance and EMC-immunity for dedicated applications at a very low total cost of ownership. They can be stacked both vertically and horizontally with no air gap separation between units required.



Our display range is characterized by its flexibility and stability. The devices meet nearly every demand for display readout of process signals, and have universal input and power supply capabilities. They provide a real-time measurement of your process value no matter the industry, and are engineered to provide a user-friendly and reliable relay of information, even in demanding environments.

2-wire programmable transmitter 6333

Table of contents

Technical characteristics 4
Mounting / installation. 4
Applications 4
Order 5
Electrical specifications 5
Connections 7
Block diagram 7
Programming 8
ATEX Installation Drawing - 6333A 9
ATEX Installation Drawing - 6333B 11
IECEx Installation Drawing - 6333A 13
IECEx Installation Drawing - 6333B 15
CSA Installation Drawing - 6333B 17
FM Installation Drawing - 6333B 19
Document history 21

2-wire programmable transmitter
6333

- RTD or Ohm input
- High measurement accuracy
- 3-wire connection
- Programmable sensor error value
- 1- or 2-channel version

Application

- Linearized temperature measurement with Pt100... Pt1000 or Ni100...Ni1000 sensor.
- Conversion of linear resistance variation to a standard analog current signal, for instance from valves or Ohmic level sensors.

Technical characteristics

- Within a few seconds the user can program PR6333 to measure temperatures within all RTD ranges defined by the norms.
- The RTD and resistance inputs have cable compensation for 3-wire connection.
- A limit can be programmed on the output signal.

Mounting / installation

- Mounted vertically or horizontally on a DIN rail. Using the 2-channel version up to 84 channels per metre can be mounted.
- The 6333B can be mounted in zone 0, 1, 2 and zone 20, 21, 22 including M1 / Class I/II/ III, Division 1, Groups A, B, C, D..

Applications

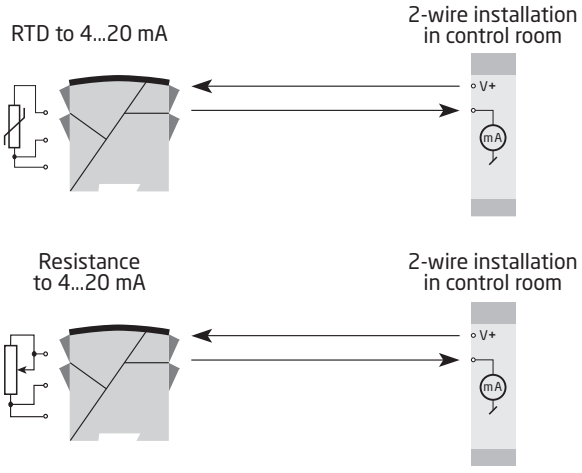

Order

Type	Version	Galvanic isolation	Channels
6333	Standard : A ATEX, CSA, FM & IECEx : B	None : 2	Single : A Double : B

Electrical specifications

Environmental conditions:

Specification range . . . . . -40°C to +85°C
Storage temperature . . . . . -40°C to +85°C
Calibration temperature. . . . . 20...28°
Humidity. . . . . < 95% RH (non-cond.)
Protection degree IP20

Mechanical specifications:

Dimensions (H x W x D) . . . . . 109 x 23.5 x 104 mm
Weight (1 / 2 channels) . . . . . 145 / 185 g
DIN rail type. . . . . DIN EN/IEC 60715 - 35 mm
Wire size. . . . . 0.13...2.08 mm^2 / AWG 26...14 stranded wire
Screw terminal torque. . . . . 0.5 Nm

Common specifications:

Supply voltage, DC
  Standard. . . . . 8...35 VDC
  ATEX, CSA, FM & IECEx . . . . . 8...30 VDC
Internal consumption . . . . . 0.19...0.8 W
Voltage drop . . . . . 8 VDC
Warm-up time. . . . . 5 min.
Communications interface . . . . . Loop Link
Signal / noise ratio. . . . . Min. 60 dB
Response time (programmable) . . . . . 0.33...60 s
Signal dynamics, input . . . . . 19 bit
Signal dynamics, output . . . . . 16 bit
Effect of supply voltage variation. . . . . < 0.005% of span / VDC
Accuracy, the greater of general and basic values:

General values		
Input type	Absolute accuracy	Temperature coefficient
All	≤ ±0.1% of span	≤ ±0.01% of span / °C

Basic values		
Input type	Basic accuracy	Temperature coefficient
RTD	≤ ±0.3°C	≤ ±0.01°C/°C
Lin. R	≤ ±0.2 Ω	≤ ±20 mW / °C

EMC - immunity influence.	< ±0.5% of span

Electrical specifications, inputs:

Max. offset . . . . . 50% of selec. max. value

RTD and linear resistance inputs:

RTD type	Min. value	Max. value	Min. span	Standard
Pt100	-200°C	+850°C	25°C	IEC 60751
Ni100	-60°C	+250°C	25°C	DIN 43760
Lin. R	0 Ω	10000 Ω	30 Ω	-----

Cable resistance per wire (max.). . . . . 10 Ω

Sensor current . . . . . > 0.2 mA, < 0.4 mA

Effect of sensor cable resistance (3-wire) . . . . . < 0.002 Ω/Ω

Sensor error detection . . . . . Yes

Outputs:

Current outputs:

Signal range. . . . . 4...20 mA

Min. signal range.. . . . . 16 mA

Updating time . . . . . 135 ms

Load resistance. . . . . $\leq (V_{supply} - 8) / 0.023$ [Ω]

Load stability . . . . . < ±0.01% of span / 100 Ω

Sensor error detection:

Programmable . . . . . 3.5...23 mA

NAMUR NE43 Upscale . . . . . 23 mA

NAMUR NE43 Downscale. . . . . 3.5 mA

Of span = Of the presently selected range

Approvals:

EMC 2004/108/EC. . . . . EN 61326-1

EAC TR-CU 020/2011. . . . . EN 61326-1

Ex / I.S.:

ATEX 94/9/EC . . . . . KEMA 09ATEX0147 X

CSA 1125003

FM 2D5A7

IECEx. . . . . IECEx DEK 14.0049X

EAC Ex TR-CU 012/2011 . . . . . RU C-DK.GB08.V.00410

Connections

Inputs:

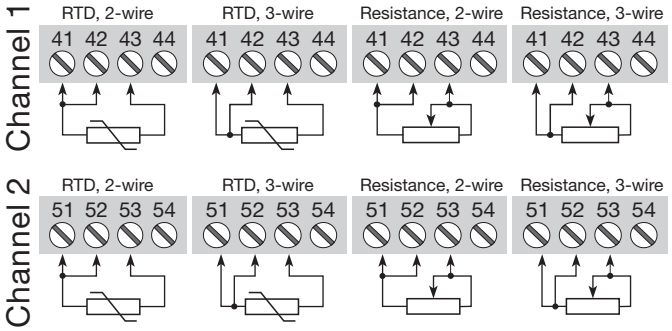

Outputs:

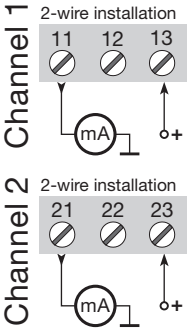

Block diagram

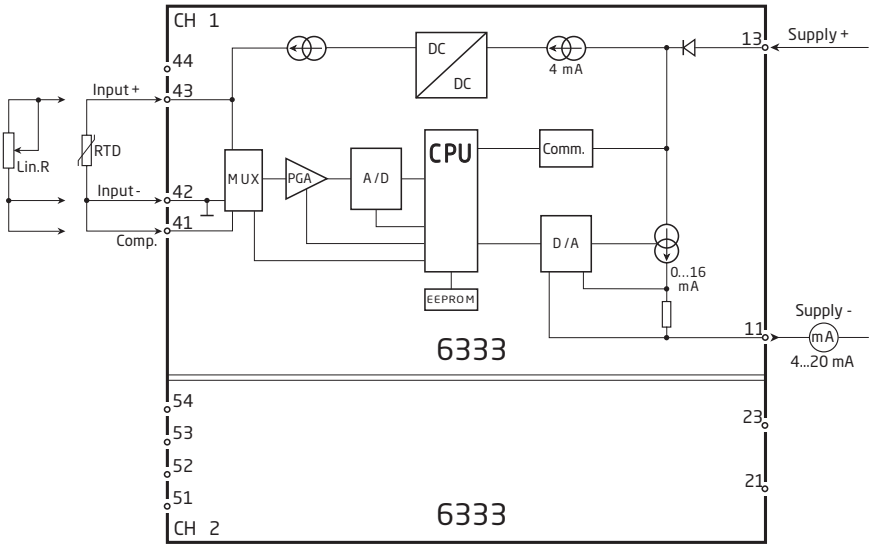

Programming

- Loop Link is a communications interface that is needed for programming 6333.
- For programming please refer to the drawing below and the help functions in PReset.
- When communicating with non-installed devices, connectors 11, 12, 13 (channel 1) and 21, 22, 23 (channel 2) can be dismantled in the safe area to connect the terminals of the communications interface to the pins.
- Loop Link is not approved for communication with devices installed in harzardous (Ex) areas.

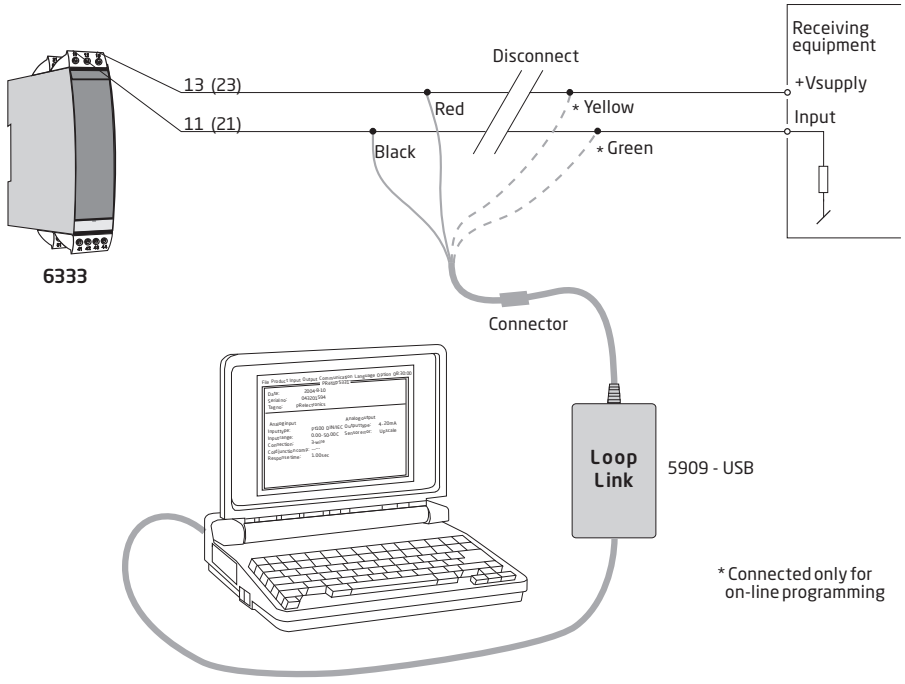

LERBAKKEN 10, 8410 RØNDE DENMARK. WWW.PRELECTRONICS.COM

ATEX Installation drawing

For safe installation of 6333A and 6343A the following must be observed. The module shall only be installed by qualified personnel who are familiar with the national and international laws, directives and standards that apply to this area.
Year of manufacture can be taken from the first two digits in the serial number.

ATEX Certificate KEMA 09ATEX 0147X

Marking

II 3 G Ex nA [ic] IIC T6..T4 Gc
II 3 G Ex ic IIC T6..T4 Gc
II 3 D Ex ic IIIC Dc

Standards EN 60079-0 : 2012, EN 60079-11 : 2012, EN 60079-15 : 2010

T4: -40ºC to 85 ºC
T6: -40ºC to 60 ºC

Terminal:
41,42,43 /
51,52,53

Ex nA [ic]

Uo: 5 VDC
Io: 4 mA
Po: 20 mW
Lo: 900 mH
Co: 1000 µF

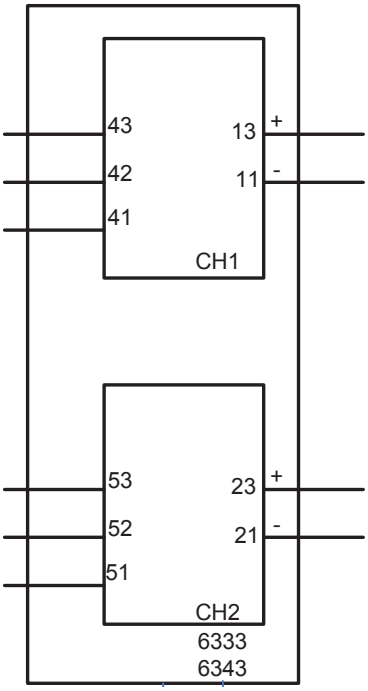

Hazardous Area Zone 2

Terminal:
11-13 / 21-23

Ex nA
Umax ≤ 35 VDC

Ex ic
Ui = 35 VDC
Li = 10 µH
Ci = 6.2 nF

General installation instructions

To avoid risk of ignition during installation and maintenance appropriate safety measures against electrostatic discharge (ESD) are to be considered.

For installation in a potentialy explosive gas atmosphere, the following instructions apply:

If the transmitter is applied in type of protection “Ex nA”, it shall be installed in an enclosure that is Ex nA certified according to IEC-EN 60079-15, or “Ex e” certified and suitable for the application and correctly installed.

Cable entry devices and blanking elements shall fulfill the same requirements

For installation in a potentially explosive dust atmposphere, the following instructions apply:

If the transmitter is supplied with an intrinsically safe signal "ic" and interfaces an intrinsically safe signal "ic" (e.g. a passive device), the transmitter shall be mounted in a metal enclosure that provides a degree of protection of at least IP6X according to EN/IEC 60529, and that is suitable for the application. Cable entry devices and blanking elements shall fulfill the same requirements. The surface temperature of the enclosure is equal to the ambient temperature +20K for a dust layer with a maximum thickness of 5 mm.

LERBAKKEN 10, 8410 RØNDE DENMARK. WWW.PRELECTRONICS.COM

ATEX Installation drawing

For safe installation of 6333B and 6343B the following must be observed. The module shall only be Installed by qualified personnel who are familiar with the national and international laws, directives and standards that apply to this area.
Year of manufacture can be taken from the first two digits in the serial number.

ATEX Certificate KEMA 09ATEX 0147 X

Marking II 1 G Ex ia IIC T6..T4 Ga
II 1 D Ex ia IIIC Da
I M 1 Ex ia I Ma

Standards EN 60079-0 : 2012, EN 60079-11 : 2012, EN 60079-26 : 2007

Hazardous area
Zone 0, 1, 2, 20, 21, 22

T4: -40 ≤ Ta ≤ 85ºC
T5: -40 ≤ Ta ≤ 60ºC
T6: -40 ≤ Ta ≤ 40ºC

Terminal:
41,42,43
Uo: 30 VDC
Io: 8 mA
Po: 60 mW
Lo: 35 mH
Co: 60.8 nF

Terminal:
51,52,53
Uo: 30 VDC
Io: 8 mA
Po: 60 mW
Lo: 35 mH
Co: 60.8 nF

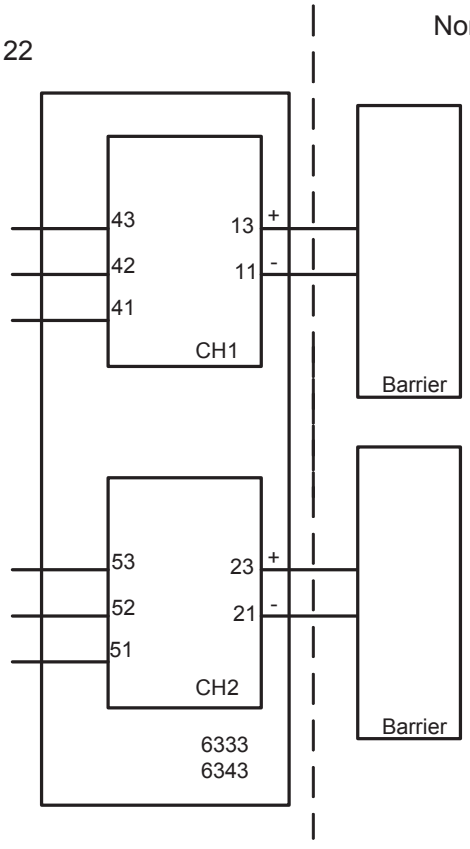

Terminal:
11,13 and
21,23
Ui: 30 VDC
Ii: 120 mA
Pi: 0.84 W
Li: 10 µH
Ci: 6.2 nF

General installation instructions

To avoid risk of ignition during installation and maintenance appropriate safety measures against electrostatic discharge (ESD) are to be considered.

For installation in a potentially explosive gas atmosphere the following instructions apply:

To avoid risk of ignition due to electrostatic discharge (ESD) the transmitter shall be mounted in an enclosure providing a degree of protection of at least IP20 according to EN/IEC 60529.

Ambient temperature range:

T4: -40 ≤ Ta ≤ 85ºC

T5: -40 ≤ Ta ≤ 60ºC

T6: -40 ≤ Ta ≤ 40ºC

For installation in a potentially explosive dust atmosphere, the following instructions apply:

The transmitter shall be mounted in a metal enclosure or equivalent that is providing a degree of protection of at least IP6X according to EN/IEC 60529 that is suitable for the application and correctly installed. Cable entries and blanking elements shall be used that are suitable for the application and correctly installed. The surface temperature of the enclosure is equal to the ambient temperature +20K for a dust layer with a maximum thickness of 5 mm.

Ambient temperature range:

T4: -40 ≤ Ta ≤ 85ºC

For installation in a potentially explosive atmosphere in mines, the following instructions apply:

The transmitter shall be mounted in an enclosure providing a degree of protection of at least IP6X according to EN/IEC 60529. Cable entries and blanking elements shall be used that are suitable for the application and correctly installed.

Ambient temperature range:

T4: -40 ≤ Ta ≤ 85ºC

LERBAKKEN 10, 8410 RØNDE DENMARK. WWW.PRELECTRONICS.COM

IECEx Installation drawing

For safe installation of 6333A and 6343A the following must be observed. The module shall only be installed by qualified personnel who are familiar with the national and international laws, directives and standards that apply to this area.
Year of manufacture can be taken from the first two digits in the serial number.

IECEx Certificate IECEx DEK 14.0049X

Marking
Ex nA [ic] IIC T6..T4 Gc
Ex ic IIC T6..T4 Gc
Ex ic IIIC Dc

Standards IEC 60079-0 : 2011, IEC 60079-11 : 2011, IEC 60079-15 : 2010

Hazardous Area Zone 2

T4: -40ºC to 85 ºC
T6: -40ºC to 60 ºC

Terminal:
41,42,43 /
51,52,53

Ex nA [ic]

Uo: 5 VDC
Io: 4 mA
Po: 20 mW
Lo: 900 mH
Co: 1000 µF

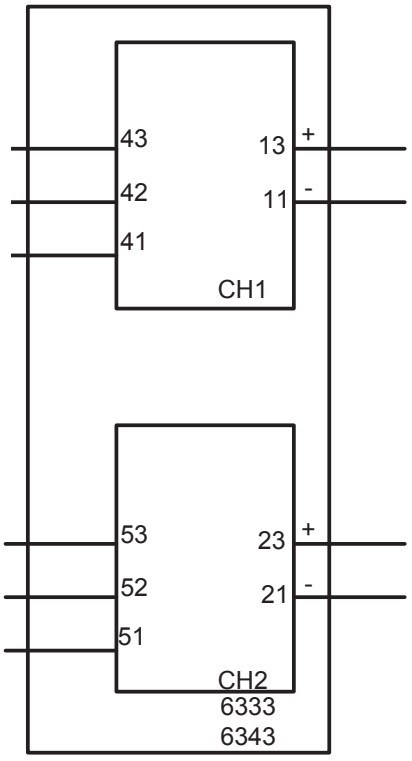

Terminal:
11-13 / 21-23

Ex nA
Umax ≤ 35 VDC

Ex ic
Ui = 35 VDC
Li = 10 µH
Ci = 6.2 nF

General installation instructions

To avoid risk of ignition during installation and maintenance appropriate safety measures against electrostatic discharge (ESD) are to be considered.

For installation in a potentialy explosive gas atmosphere, the following instructions apply:

If the transmitter is applied in type of protection “Ex nA”, it shall be installed in an enclosure that is Ex nA certified according to IEC-EN 60079-15, or “Ex e” certified and suitable for the application and correctly installed.

Cable entry devices and blanking elements shall fulfill the same requirements

For installation in a potentially explosive dust atmposphere, the following instructions apply:

If the transmitter is supplied with an intrinsically safe signal "ic" and interfaces an intrinsically safe signal "ic" (e.g. a passive device), the transmitter shall be mounted in a metal enclosure that provides a degree of protection of at least IP6X according to EN/IEC 60529, and that is suitable for the application. Cable entry devices and blanking elements shall fulfill the same requirements. The surface temperature of the enclosure is equal to the ambient temperature +20K for a dust layer with a maximum thickness of 5 mm.

LERBAKKEN 10, 8410 RØNDE DENMARK. WWW.PRELECTRONICS.COM

IECEx Installation drawing

For safe installation of 6333B and 6343B the following must be observed. The module shall only be installed by qualified personnel who are familiar with the national and international laws, directives and standards that apply to this area.
Year of manufacture can be taken from the first two digits in the serial number.

IECEx Certificate	IECEx DEK 14.0049X
Marking	Ex ia IIC T6..T4 Ga Ex ia IIIC Da Ex ia I Ma
Standards:	IEC60079-11:2011, IEC60079-0: 2011, IEC60079-26:2006

Hazardous area
Zone 0, 1, 2, 20, 21, 22

T4: -40 ≤ Ta ≤ 85ºC
T5: -40 ≤ Ta ≤ 60ºC
T6: -40 ≤ Ta ≤ 40ºC

Terminal:
41,42,43
Uo: 30 VDC
Io: 8 mA
Po: 60 mW
Lo: 35 mH
Co: 60.8 nF

Terminal:
51,52,53
Uo: 30 VDC
Io: 8 mA
Po: 60 mW
Lo: 35 mH
Co: 60.8 nF

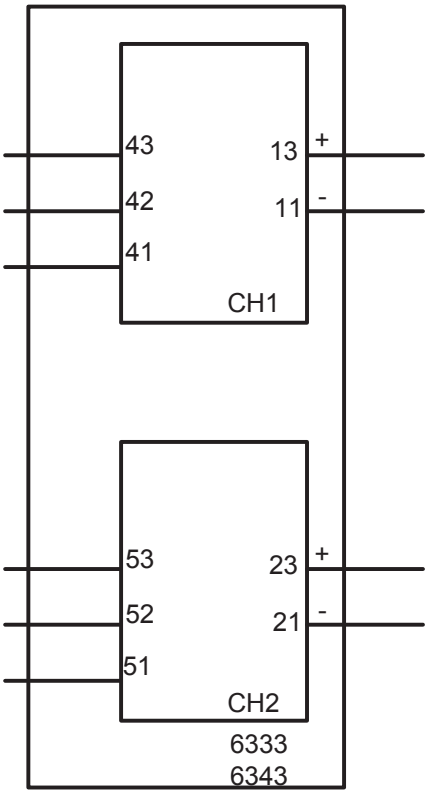

Non Hazardous Area

Terminal:
11,13 and
21,23
Ui: 30 VDC
Ii: 120 mA
Pi: 0.84 W
Li: 10 µH
Ci: 6.2 nF

General installation instructions

To avoid risk of ignition during installation and maintenance appropriate safety measures against electrostatic discharge (ESD) are to be considered.

For installation in a potentially explosive gas atmosphere the following instructions apply:

To avoid risk of ignition due to electrostatic discharge (ESD) the transmitter shall be mounted in an enclosure providing a degree of protection of at least IP20 according to EN/IEC 60529.

Ambient temperature range:

T4: -40 ≤ Ta ≤ 85ºC

T5: -40 ≤ Ta ≤ 60ºC

T6: -40 ≤ Ta ≤ 40ºC

For installation in a potentially explosive dust atmosphere, the following instructions apply:

The transmitter shall be mounted in a metal enclosure or equivalent that is providing a degree of protection of at least IP6X according to EN/IEC 60529 that is suitable for the application and correctly installed. Cable entries and blanking elements shall be used that are suitable for the application and correctly installed. The surface temperature of the enclosure is equal to the ambient temperature +20K for a dust layer with a maximum thickness of 5 mm.

Ambient temperature range:

T4: -40 ≤ Ta ≤ 85ºC

For installation in a potentially explosive atmosphere in mines, the following instructions apply:

The transmitter shall be mounted in an enclosure providing a degree of protection of at least IP6X according to EN/IEC 60529. Cable entries and blanking elements shall be used that are suitable for the application and correctly installed.

Ambient temperature range:

T4: -40 ≤ Ta ≤ 85ºC

Hazardous (Classified) Location
IS,Class I, Division 1, Group A,B,C,D T4..T6
Ex ia IIC T4..T6 Ga
Class I, Zone 0, AEx ia IIC T4..T6 Ga

Non Hazardous Location

T6: -40 ≤ Ta ≤ 60ºC
T4: -40 ≤ Ta ≤ 85ºC

Terminal: 41,42,43
Connect to passive or non-energy storing devices such as RTD's Resistors and Thermocouples only.

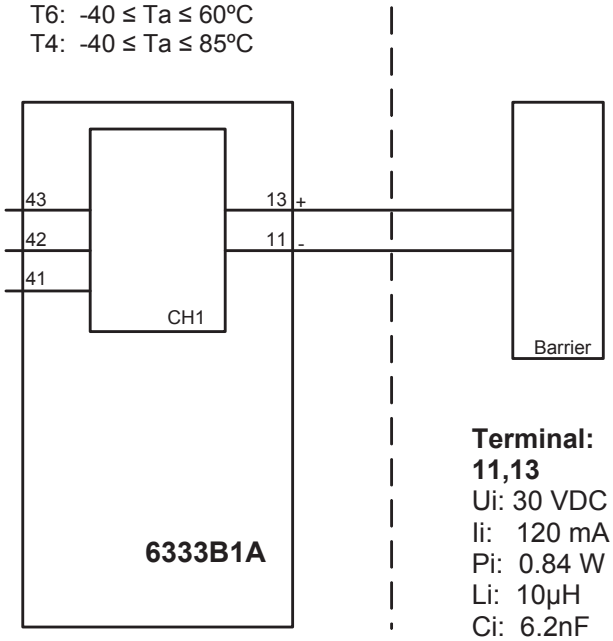

Terminal: 11,13
Ui: 30 VDC
Ii: 120 mA
Pi: 0.84 W
Li: 10µH
Ci: 6.2nF

Co(Ca) > ∑(Ci+Ccable)
Lo(La) > ∑ (Li+Lcable)

Installation notes.
The Transmitter must be installed in a suitable enclosure to meet installation codes stipulated in The Canadian Electrical Code (CEC).

Substitution of components may impair intrinsic safety.

Hazardous (Classified) Location
IS,Class I, Division 1, Group A,B,C,D T4..T6
Ex ia IIC T4..T6 Ga
Class I, Zone 0, AEx ia IIC T4..T6 Ga

Non Hazardous Location

T6: -40 ≤ Ta ≤ 60ºC
T4: -40 ≤ Ta ≤ 85ºC

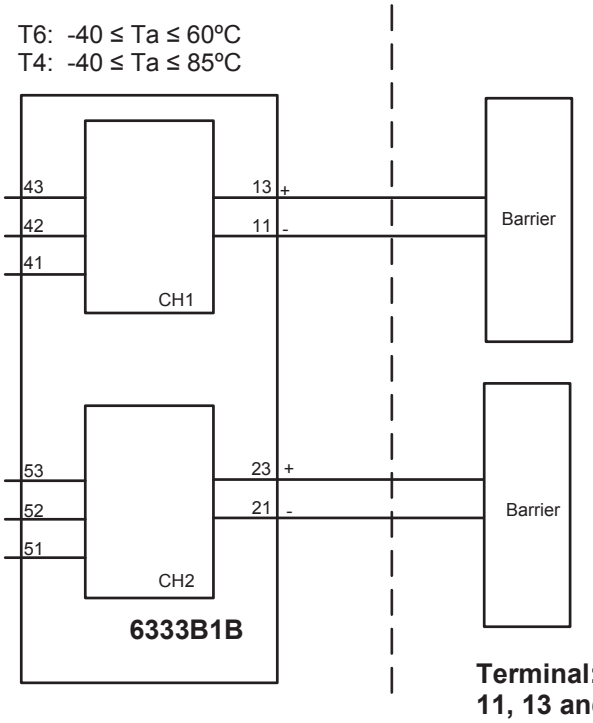

Terminal: 41,42,43
51,52,53
Connect to passive or non-energy storing devices such as RTD's Resistors and Thermocouples only.

Terminal:
11, 13 and
21, 23
Ui: 30 VDC
Ii: 120 mA
Pi: 0.84 W
Li: 10µH
Ci: 6.2nF

$Co(Ca) > \sum(Ci+Ccable)$
$Lo(La) > \sum(Li+Lcable)$

Installation notes.
The Transmitter must be installed in a suitable enclosure to meet installation codes stipulated in The Canadian Electrical Code (CEC).

Channel 1 and Channel 2 are separate channels and therefore separate shielded cables shall be used for each channel.

Substitution of components may impair intrinsic safety.

Hazardous (Classified) Location
Class I, Division 1, Group A,B,C,D T4..T6
Class I, Zone 0, AEx ia IIC T4..T6

Non Hazardous Location

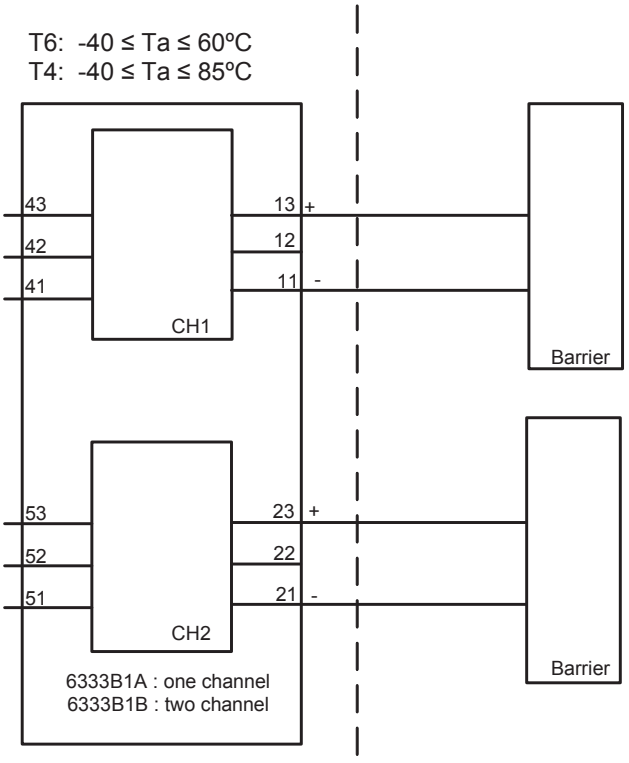

Terminal: 11,12,13 and 21,22,23

Ui: 30 VDC
Ii: 120 mA
Pi: 0.84 W
Li: 10µH
Ci: 6.2nF

Installation notes.

For installation in Class I the Transmitter must be installed in a suitable enclosure to meet installation codes stipulated in The National Electrical Code (ANSI-NFPA 70).

Equipment that is FM-approved for intrinsic safety may be connected to barriers based on the Entity Concept. This concept permits interconnection of approved transmitters, meters and other devices in combinations, which have not been specifically examined by FM, provided that the agency's criteria are met. The combination is then intrinsically safe, if the entity concept is acceptable to the authority having jurisdiction over the installation.

The entity concept criteria are as follows: The intrinsically safe devices, other than barriers, must not be a source of power. The maximum voltage Ui(V_{MAX}) and current Ii(I_{MAX}), and maximum power Pi(Pmax), which the device can receive and remain intrinsically safe, must be equal to or greater than the voltage (Uo or V_{OC} or V_t) and current (Io or I_{SC} or I_t) and the power Po which can be delivered by the barrier. The sum of the maximum unprotected capacitance (C_i) for each intrinsically device and the interconnecting wiring must be less than the capacitance (C_a) which can be safely connected to the barrier. The sum of the maximum unprotected inductance (L_i) for each intrinsically device and the interconnecting wiring must be less than the inductance (L_a) which can be safely connected to the barrier. The entity parameters Uo, V_{OC} or V_t and Io, I_{SC} or I_t, and C_a and L_a for barriers are provided by the barrier manufacturer.

LERBAKKEN 10, 8410 RØNDE DENMARK. WWW.PRELECTRONICS.COM

Hazardous (Classified) Location
Class I, Division 2, Group A,B,C,D T4..T6
Class I, Zone 2, IIC T4..T6

Non Hazardous Location

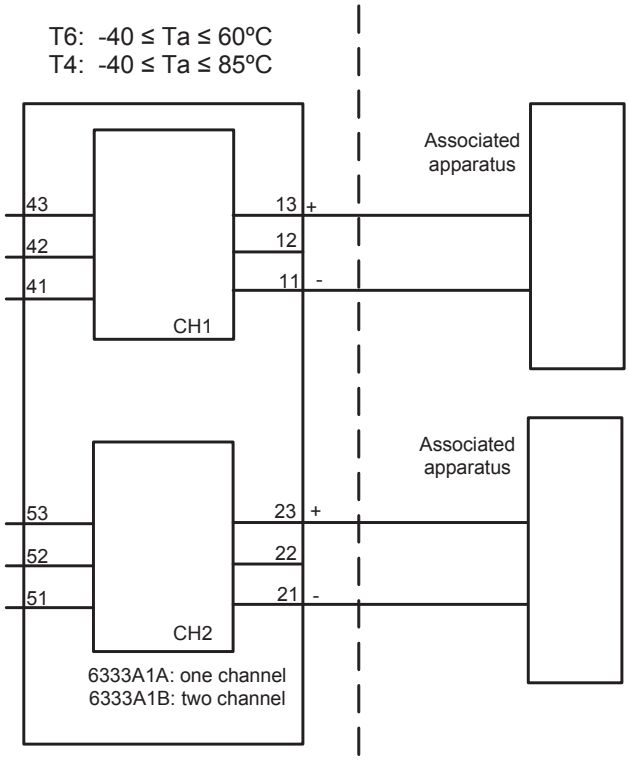

Terminal: 11,12,13 and 21,22,23

Vmax: 35 VDC
Li: 10µH
Ci: 6.2nF

Installation notes.
The Transmitter must be installed in a suitable enclosure to meet installation codes stipulated in The National Electrical Code (ANSI-NFPA 70).

To assure a Non-Incendive system the transmitter and associated apparatus must be wired in accordance with the associated apparatus manufacturers field wiring instructions and the circuit diagram shown above.
.

Document history

The following list provides notes concerning revisions of this document.

Rev. ID	Date	Notes
104	15/43	CSA, FM & IECEx approvals added

We are near you, *all over the world*

Our trusted red boxes are supported wherever you are

All our devices are backed by expert service and a 5-year warranty. With each product you purchase, you receive personal technical support and guidance, day-to-day delivery, repair without charge within the warranty period and easily accessible documentation.

We are headquartered in Denmark, and have offices and authorized partners the world over. We are a local business with a global reach. This means that we are always nearby and know your local markets well.
We are committed to your satisfaction and provide PERFORMANCE MADE SMARTER all around the world.

For more information on our warranty program, or to meet with a sales representative in your region, visit prelectronics.com.

Benefit today from
PERFORMANCE MADE SMARTER

PR electronics is the leading technology company specialized in making industrial process control safer, more reliable and more efficient. Since 1974, we have been dedicated to perfecting our core competence of innovating high precision technology with low power consumption. This dedication continues to set new standards for products communicating, monitoring and connecting our customers' process measurement points to their process control systems.

Our innovative, patented technologies are derived from our extensive R&D facilities and from having a great understanding of our customers' needs and processes. We are guided by principles of simplicity, focus, courage and excellence, enabling some of the world's greatest companies to achieve PERFORMANCE MADE SMARTER.