4300-06

IEC cord connector C13, rewirable, angled



C13

70° C

Description

- Rewireable plug:
  Screw-on
- Outlet, Pin temperature 70 °C, Protection class I
- Cable

Approvals

- UL License Number: E60148
- CSA License Number: 702825

Technical Data

Ratings IEC	10 A / 250 VAC; 50 Hz
Ratings UL/CSA	15 A / 250 VAC; 60 Hz
Dielectric Strength	> 2 kVAC between L-N > 2 kVAC between L/N-PE (1 min/50 Hz)
Allowable Operation Temp.	-25 °C to 70 °C
Protection Class	Suitable for appliances with protection class I acc. to IEC 61140
Terminal	Cable
Material: Housing	Thermoplastic, black, UL 94V-2

Appliance-Inlet/-Outlet	C13 acc. to IEC/EN 60320-1, UL 498, CSA C22.2 no. 42 (for cold conditions) pin-temperature 70 °C, 10 A, Protection class I

Dimensions

Length 70.4 mm

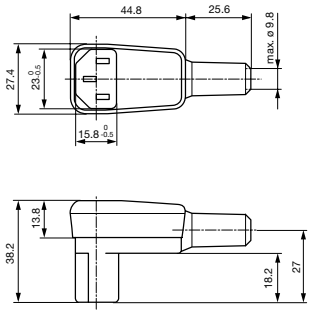

Variants

Color	Max. cable diameter	Max. wire size	Order Number
black	8.5 mm	3 x 1 mm² / 3 x 18 AWG	4300.0609

Max. torque for screws: Terminal: 0.5 Nm, Cable clamp: 0.3 Nm, Cover: 0.3 Nm

Cord retaining clamp see accessories

Packaging unit

45 Pcs

The specifications, descriptions and illustrations indicated in this document are based on current information. All content is subject to modifications anamendments.