GEFRAN

MELT PRESSURE TRANSDUCERS

M3 SERIES *mV / V output*

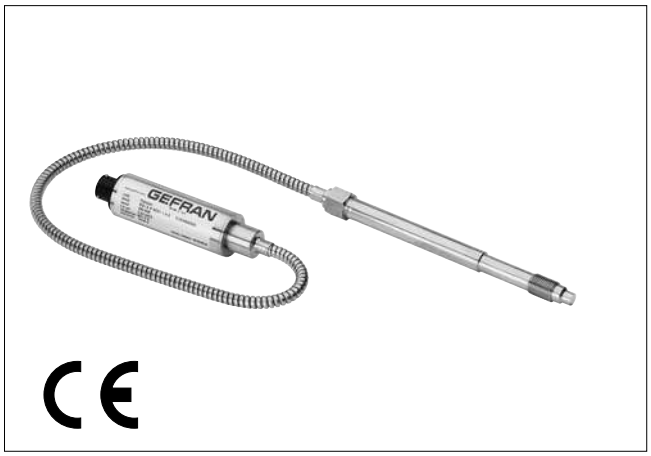

The M3 series of Gefran, are pressure transducers for using in High temperature environment.
The main characteristic of this series is the capability to read temperature of the media up to 400°C.
The constructive principle is based on the hydraulic trasmission of the pressure.
The fluid-filled system assures the temperature stability.
The phisical measure is transformed in a electrical measure by means the strain-gauge technology.

MAIN FEATURES

- Pressure ranges from:
  0-35 to 0-2000 bar / 0-500 to 0-30000 psi
- Accuracy: <±0.25% FSO (H); <±0.5% FSO (M)
- Fluid-filled system for temperature stability
- Mercury filling volume:
  M30 (30mm³), M31-M32-M33 (40mm³)
- 1/2-20UNF, M18x1.5 standard threads; other types available on request
- Standard diaphragm is 15-5 PH stainless steel with GTP+ coating
- 17-7 PH corrugated diaphragm with GTP+ coating for ranges below 100bar-1500psi

GTP+ (advanced protection)
Coating with high resistance against corrosion, abrasion and high temperature

TECHNICAL SPECIFICATIONS

Accuracy (1)	**H** <±0.25%FSO (100...2000 bar) **M** <±0.5%FSO (35...2000 bar)
Resolution	Infinite
Measurement range	0..35 to 0..2000bar 0..500 to 0..30000psi
Maximum overpressure	2 x FS 1.5 x FS above1000bar/15000psi
Measurement principle	Strain gage Wheatstone bridge
Supply voltage	6..12Vdc (10Vdc typical)
Strain gage bridge resistance	350 Ohm (550 Ohm below 100bar - 1500psi)
Isolation resistance (at 50Vdc)	>1000 MOhm
Full Scale Output (FSO) (toll. ± 0.5 FSO)	2.5 mV/V (option 2) 3.33 mV/V (option 3)
Zero balance	±0.5% FSO
Calibration signal	80% FSO
Compensated temperature range	0...+100°C 32...212°F
Maximum temperature range	-30...+120°C -22...250°F
Thermal drift in compensated range Zero/Calibr./Sens.	< 0.02% FSO/°C < 0.01% FSO/°F
Diaphragm maximum temperature	400°C 750°F
Zero drift due to change in process temperature	0.02 bar/°C 15 psi/100°F
Standard material in contact with process medium	Diaphragm: • 15-5 PH with GTP+ coating • 17-7 PH corrugated diaphragm with GTP+ coating for ranges <100 bar (1500psi) Stem: • 17-4 PH
Thermocouple (model M32)	STD : type "J" (isolated junction)
Protection degree (with 6-pin mating connector)	IP65
Electrical connections	6-pin Conn. VPT07RA10-6PT (PT02A-10-6P) 8-pin Conn. PC02E-12-8P

FSO = Full Scale Output
(1) BFSL method (Best Fit Straight Line): includes combined effects of Non-Linearity, Hysteresis and Repeatability

MECHANICAL DIMENSIONS

M30

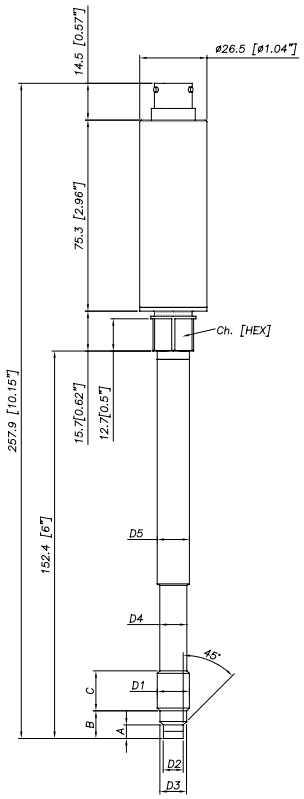

D1	1/2 - 20UNF
D2	ø7.8 -0.05 [ø0.31" -0.002]
D3	ø10.5 -0.025 [ø0.41" -0.001]
D4	ø10.67 [ø0.42"]
D5	ø12.7 [ø0.5"]
A	5.56 -0.26 [0.22" -0.01]
B	11.2 [0.44"]
C	15.74 [0.62"]
Ch [Hex]	16 [5/8"]

M32

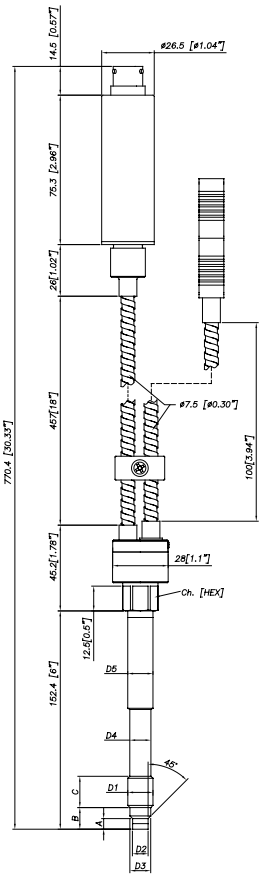

M31

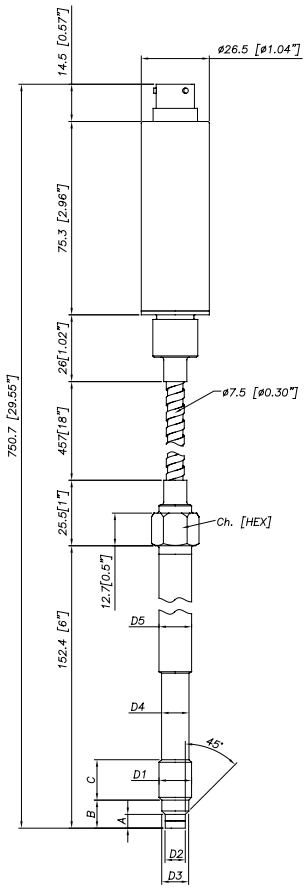

D1	M18x1.5
D2	ø10 -0.05 [ø0.394" -0.002]
D3	ø16 -0.08 [ø0.63" -0.003]
D4	ø16 -0.4 [ø0.63" -0.016]
D5	ø18 [ø0.71"]
A	6 -0.26 [0.24" -0.01]
B	14.8 -0.4 [0.58" -0.016]
C	19 [0.75"]
Ch [Hex]	19 [3/4"]

M33

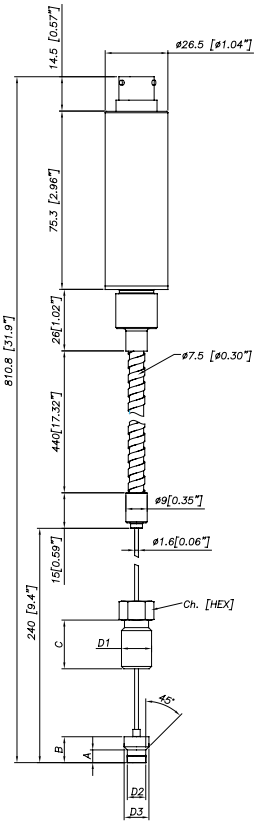

	Exposed capillary
D1	1/2-20UNF
D2	.307/.305" [7.80/7.75mm]
D3	.414/.412" [10.52/10.46mm]
A	.125/.120" [3.18/3.05mm]
B	.318/.312" [8.08/7.92mm]
C	.81" [20.6mm]

NOTE : Dimensions refer to rigid stem length option "4" (153mm - 6")

WARNING : For installation use a maximum tightening torque of 56 Nm (500 in-lb)

ELECTRICAL CONNECTIONS

mV/V OUTPUT

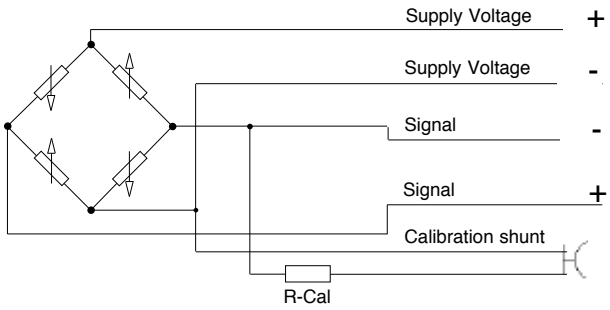

6-pin	8-pin
C	A
D	C
B	D
A	B
E - F	E - F
	G - H

Connect the cable sheathing to the side of the instrument.

6 pin connector
VPT07RA10-6PT2
(PT02A-10-6P)

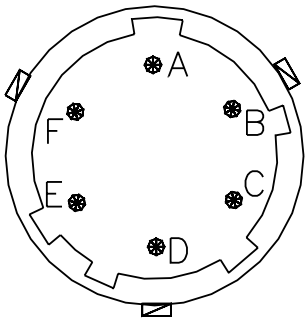

8 pin connector
PC02E-12-8P Bendix

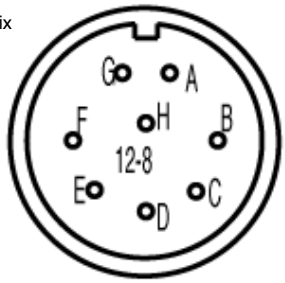

ACCESSORIES

Connectors

6-pin mating connector (IP65 protection degree)	**CON300**
8-pin mating connector	**CON307**

Extension cables

6-pin connector with 8m (25ft) cable	**C08W**
6-pin connector with 15m (50ft) cable	**C15W**
6-pin connector with 25m (75ft) cable	**C25W**
6-pin connector with 30m (100ft) cable	**C30W**
8-pin connector with 8m (25ft) cable	**E08W**
8-pin connector with 15m (50ft) cable	**E15W**
8-pin connector with 25m (75ft) cable	**E25W**
8-pin connector with 30m (100ft) cable	**E30W**
Other lengths	**consult factory**

Cable color code 6 wires

Conn.	Wire
A	Red
B	Black
C	White
D	Green
E	Blue
F	Orange

Cable color code 8 wires

Conn.	Wire
A	White
B	Red
C	Green
D	Black
E	Blue
F	Orange
G	n.c.
H	n.c.

Accessories

Mounting bracket	**SF18**
Dummy plug for 1/2-20UNF	**SC12**
Dummy plug for M18x1.5	**SC18**
Drill kit for 1/2-20UNF	**KF12**
Drill kit for M18x1.5	**KF18**
Cleaning kit for 1/2-20UNF	**CT12**
Cleaning kit for M18x1.5	**CT18**

Thermocouple for M32 model

Type “J” (153mm - 6” stem)	**TTER 601**

ORDER CODE

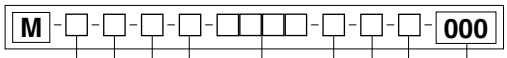

000 = Standard version
Special or customized versions available on request

OUTPUT SIGNAL	
2.5 mV/V	**2**
3.33 mV/V	**3**

VERSION	
Rigid stem	**0**
Rigid stem + flexible	**1**
With thermocouple	**2**
Exposed capillary	**3**

CONNECTOR	
Standard	
6 pin	**6**
8 pin	**8**

ACCURACY CLASS	
0.25% FSO (ranges ≥ 100 bar/1500 psi)	**H**
0.5% FSO	**M**

RANGE			
bar		psi	
35	**B35U**	**500**	**P05C**
50	**B05D**	**750**	**P75D**
70	**B07D**	**1000**	**P01M**
100	**B01C**	**1500**	**P15C**
200	**B02C**	**3000**	**P03M**
350	**B35D**	**5000**	**P05M**
500	**B05C**	**7500**	**P75C**
700	**B07C**	**10000**	**P10M**
1000	**B01M**	**15000**	**P15M**
1400	**B14C**	**20000**	**P20M**
2000	**B02M**	**30000**	**P30M**

FLEXIBLE LENGTH (mm / inches)		
Standard (M30)		
0	none	
Standard (M31, M32)		
D	457mm	18”
E	610mm	24”
F	760mm	30”
Standard (M33)		
L	711mm	28”
Available on request		
A	76mm	3”
B	152mm	6”
C	300mm	12”
G	914mm	36”
H	1067mm	42”
I	1220mm	48”
J	1372mm	54”
K	1520mm	60”

RIGID STEM LENGTH (mm / inches)		
Standard (M30, M31, M32)		
4	153mm	6”
5	318mm	12.5”
Standard (M33)		
0	none	
Available on request		
1	38mm	1.5”
2	50mm	2”
3	76mm	3”
6	350mm	14”
7	400mm	16”
8	456mm	18”

THREAD	
Standard	
1	1/2 - 20 UNF
4	M18 x 1.5

Examples

M32-6-M-B07C-1-4-D-000
Melt pressure transducer with type “J” thermocouple, 3.33 mV/V output, 6-pin connector, 1/2-20UNF thread, 700bar full scale, 0.5 % accuracy class, 153 mm (6”) rigid stem, 457mm (18”) flexible capillary.

M20-8-M-P03M-1-4-0-000
Melt pressure transducer, rigid stem, 2.5 mV/V output, 8-pin connector, 1/2-20UNF thread, 3000psi full scale, 0.5 % accuracy class, 153 mm (6”) rigid stem

Product designed and available in compliance with Directive 2011/65/EU (RoHS II) only for large-scale stationary installation or industrial tools, or for B-to-B laboratory equipments for R&D purposes

GEFRAN reserves the right to make any kind of design or functional modification at any moment without prior notice.

GEFRAN

GEFRAN spa
via Sebina, 74
25050 PROVAGLIO D’ISEO (BS) - ITALIA
tel. 0309888.1 - fax. 0309839063
Internet: http://www.gefran.com