trumeter
innovation by design

722 Series

Electromechanical Hour Meter



The Redington Model 722 provides an AC Hour Meter with an operating range of 90-264VAC 50/60 Hz. You no longer require two separate meters, one for 115VAC and one for 230VAC. Models are available in the standard industry housings, 2-Hole Rectangular, Flush-Rectangular, Flush-Round and 3-Hole Round. Its quartz time base insures accurate long-term time keeping. The Totally Sealed case protects against the environment and provides years of reliable service. All models are NEMA 4X,12 rated when mounted with optional gasket.

Key Features

- Operating voltage 90-264VAC 50/60Hz
- Totally Sealed
- UL/cUL Recognized, CE & RoHS Compliant
- 6 Figure, 99999.9
- Quartz accuracy
- Options include:
  - Wire leads
  - Gasket kit (for NEMA 4X, 12 rating)
  - Custom lens
  - Terminals up, down, straight

Applications

- Medical Equipment
- Control Panels
- Office Equipment
- Test Equipment
- Generators

trumeter
innovation by design

Specification

Figures	6 - digits, 0.14” [3.6mm] 99999.9 Hours and indicator - white on black Decimal - black on white
Reset	Non-reset
Voltage	90-264VAC
Frequency	50/60Hz
Power	1 watt max.
Mount	Clip or mounting holes
Terminations	1/4” [6.3mm] spade terminals
Weight	~2 oz [57 g]
Accuracy	± 0.02% over entire range
Case Material	Black polymer
Lens Material	Polymer
Approvals	UL/cUL Recognized, CE & RoHS Compliant, SAE & NEMA 4X, 12 Compliant
Environmental	Totally Sealed
Front Panel	NEMA 4X, 12 rated with optional gasket
Temp. Range	-40°F to +185°F [-40°C to + 85°C]
Humidity	95% (SAE J1378)
Vibration	10-80 Hz. 20g max. (SAE J1378)
Shock	55g @ 9 - 13msec (SAE J1378)

Dimensions

2-Hole

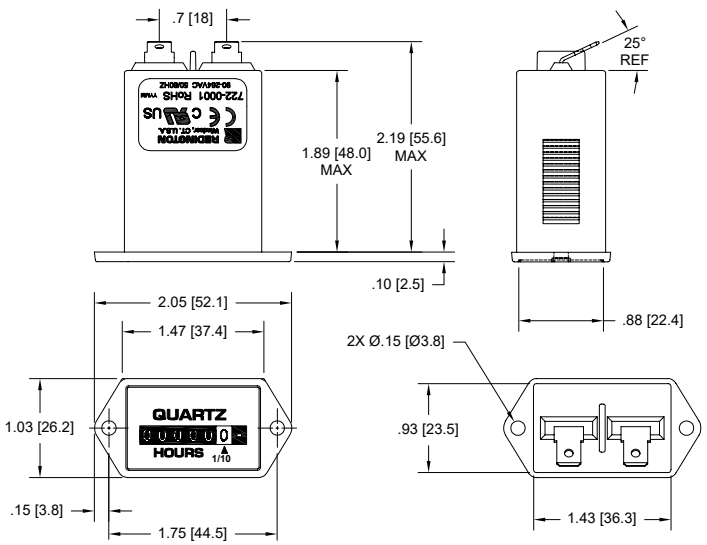

Panel Opening: 1.45” X 0.95” [36.8 X 24.1]

Flush-Rectangular

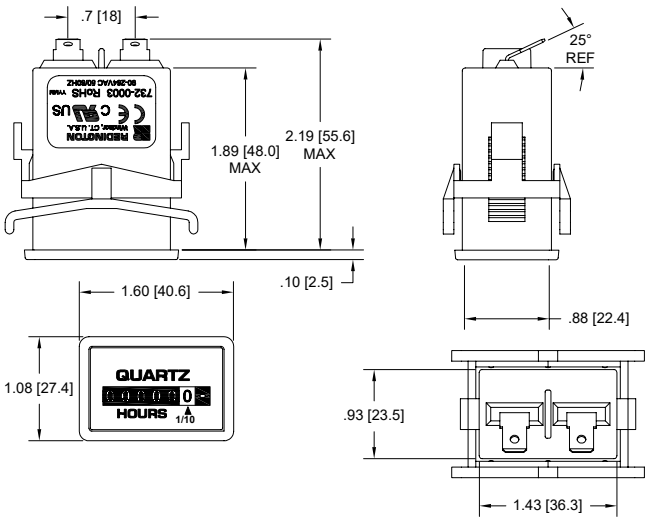

Panel Opening: 1.45” X 0.95” [36.8 X 24.1]
Panel Thickness: 0.03 to 0.63 [0.76 to 16.00]

trumeter
innovation by design

Flush-Round

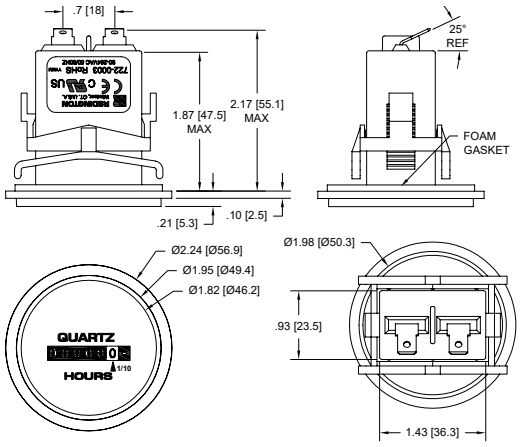

Panel Opening: 2.0" [50.6]
Panel Thickness: 0.40 [10.2] Max.

3-Hole Round

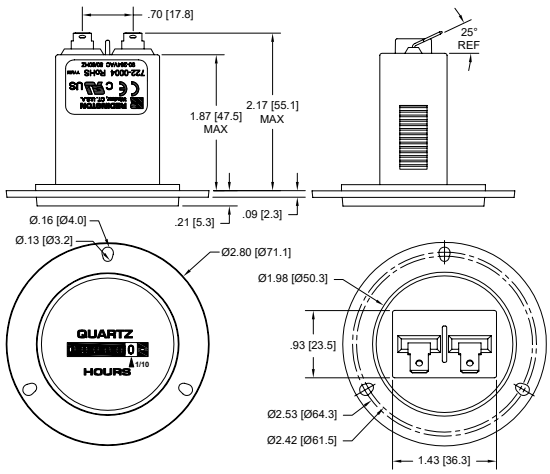

Panel Opening: 2.0" [50.6]

Square

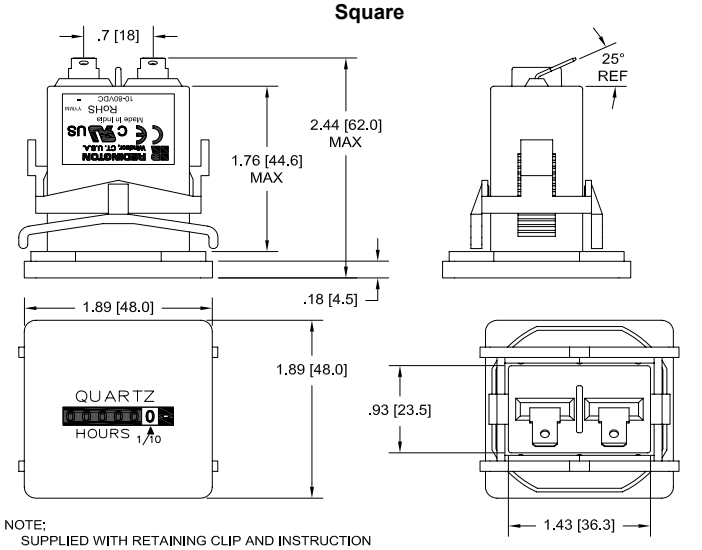

NOTE:
SUPPLIED WITH RETAINING CLIP AND INSTRUCTION SHEET 211013-321IN A LABELED BOX.

PANEL CUTOUT: 1.77 [45] X 1.77 [45]
MAX PANEL THICKNESS: 0.40 [10.2]

Part Numbers

722-0001	2-Hole Rectangular, 90-264VAC 50/60Hz, ¼" [6.3mm] spade terminals, hours & 1/10's
722-0002	Flush-Rectangular, 90-264VAC 50/60Hz, ¼" [6.3mm] spade terminals, hours & 1/10's
722-0003	Flush-Round, 90-264VAC 50/60Hz, ¼" [6.3mm] spade terminals, hours & 1/10's
722-0004	3-Hole Round, 90-264VAC 50/60Hz, ¼" [6.3mm] spade terminals, hours & 1/10's
722-0030	Square 1.9", 90-264VAC 50/60Hz, ¼" [6.3mm] spade terminals, hours & 1/10's
5003-010	NEMA 4X, 12 Gasket for Model 722-0001
5003-009	NEMA 4X, 12 Gasket for Model 722-0002
5003-008	NEMA 4X, 12 Gasket for Model 722-0003
5003-011	NEMA 4X, 12 Gasket for Model 722-0004



www.trumeter.com

Trumeter (Europe)
Pilot Mill
Alfred Street
Bury,
BL9 9EF
Tel: +44 161 674 0960
Email: sales.uk@trumeter.com

Trumeter (The Americas)
702 S. Military Trail
Deerfield Beach, Florida
FL 33442,
USA
Tel: +1 954 725 6699
Email: sales.usa@trumeter.com

Innovative Design Technologies Sdn. Bhd
Lot 5881, Lorong Iks Bukit Minyak 1
Taman Perindustrian Iks, 14000 Bukit Tengah
Penang, Malaysia
Web: www.idtworld.com
Tel: + 604 5015700
Email: sales.my@idtworld.com