HF163F-L SUBMINIATURE INTERMEDIATE POWER LATCHING RELAY

c UL us
File No.: E134517

VDE
File No.: 40039460



Features

- Latching relay
- High sensitive
- Breakdown voltage (between contact and coil): 5,000 V
- High switching capacity: 8A 250VAC
- Surge breakdown voltage (between contact and coil): 12,000 V
- Reflow soldering available
- 1 Form A configuration
- Environmental friendly product (RoHS compliant)
- Outline Dimensions: (24.0 x 10.0 x 18.8) mm

CONTACT DATA

Contact arrangement	1A
Contact resistance	100mΩ max. (at 1A 6VDC)
Contact material	$AgSnO_2$
Contact rating (Res. load)	8A 250VAC 5A 30VDC
Max. switching voltage	250VAC / 30VDC
Max. switching current	10A
Max. switching power	2500VA/150W
Mechanical endurance	1 x 10^6OPS
Electrical endurance	5 x 10^4OPS(8A 250VAC, Resistive load, at 85℃, 1s on 9s off)

CHARACTERISTICS

Insulation resistance		1000MΩ (at 500VDC)
Dielectric strength	Between coil & contacts	5000VAC 1min
	Between open contacts	1000VAC 1min
Set time		15ms max.
Reset time		15ms max.
Shock resistance	Functional	98m/s²
	Destructive	980m/s²
Vibration resistance		10Hz to 55Hz 2.0mm DA
Humidity		5% to 85% RH
Ambient temperature		-40˚C to 85˚C
Termination		PCB
Unit weight		Approx. 8g
Construction		Flux proofed

Notes: The data shown above are initial values.

COIL

Coil power	1 coil latching	Approx. 200mW
	2 coils latching	Approx. 400mW

COIL DATA at 23˚C

1 coil latching (200mW)

Nominal Voltage VDC	Set Voltage VDC max.	Reset Voltage VDC max.	Coil Resistance x (1±10%) Ω
3	2.4	2.4	45
5	4.0	4.0	125
6	4.8	4.8	180
9	7.2	7.2	405
12	9.6	9.6	720
24	19.2	19.2	2880

2 coils latching (400mW)

Nominal Voltage VDC	Set Voltage VDC max.	Reset Voltage VDC max.	Coil Resistance x (1±10%) Ω
3	2.4	2.4	22.5
5	4.0	4.0	62.5
6	4.8	4.8	90
9	7.2	7.2	202.5
12	9.6	9.6	360
24	19.2	19.2	1440

SAFETY APPROVAL RATINGS

UL/CUL	8A 250VAC at 85˚C 5A 30VDC at 85˚C 10A 250VAC at 40˚C TV-3 125VAC at 40˚C 800W 277VAC Tungsten at 40˚C 4A 277VAC Standard Ballast at 40˚C
VDE	8A 250VAC at 85˚C 5A 30VDC at 85˚C

Notes: 1) All values unspecified are at room temperature.
2) Only typical loads are listed above. Other load specifications can be available upon request.

ORDERING INFORMATION

	HF163F-L/	12	-H	L2	T	(XXX)
Type						
Coil voltage	3, 5, 6, 9, 12, 24VDC					
Contact form	**H:** 1 Form A					
Sort	**L1:** 1 coil latching	**L2:** 2 coils latching				
Contact material	**T:** $AgSnO_2$					
Special code[4]	**XXX:** Customer special requirement		**Nil:** Standard			

Notes: 1) We recommend flux proofed types for a clean environment (free from contaminations like H_2S, SO_2, NO_2, dust, etc.).
2) Contact is recommended for suitable condition and specifications if water cleaning or surface process is involved in assembling relays on PCB.
3) For gold plated type, the min. switching current and min. switching voltage is 10mA 5VDC.
4) The customer special requirement express as special code after evaluating by Hongfa. e.g.(335) stands for product in accordance to IEC 60335-1 (GWT); e.g.(470) stands for product which is suitable for reflow soldering.

OUTLINE DIMENSIONS, WIRING DIAGRAM AND PC BOARD LAYOUT

Unit: mm

Outline Dimensions

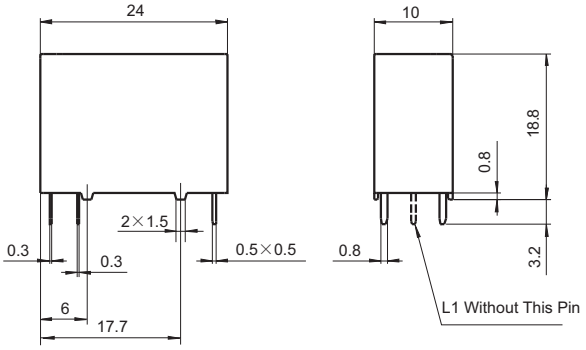

PCB Layout
(Bottom view)

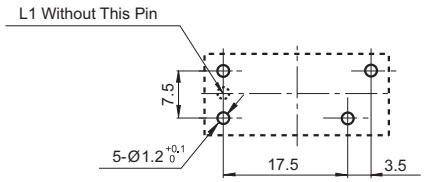

Remark: 1) In case of no tolerance shown in outline dimension: outline dimension ≤1mm, tolerance should be ±0.2mm; outline dimension >1mm and ≤5mm, tolerance should be ±0.3mm; outline dimension >5mm, tolerance should be ±0.4mm.
2) The tolerance without indicating for PCB layout is always ±0.1mm.
3) The width of the gridding is 2.54mm.

OUTLINE DIMENSIONS, WIRING DIAGRAM AND PC BOARD LAYOUT

Unit: mm

Wiring Diagram

(Bottom view)

Reset Status

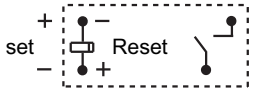

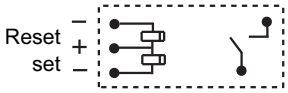

RECOMMENDED SOLDERING CONDITIONS

Temperature/Time profile of Reflow Soldering see below:

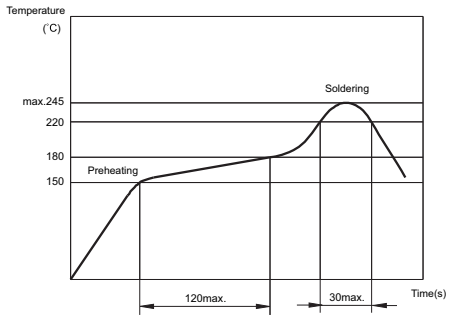

Notes: 1) Temperature profile shows Printed Circuit Board surface temperature on the relay terminal portion.

2) Please check the actual soldering condition to use other method except above mentioned temperature profiles.

Notice

1. Relay is on the “reset” or "set" status when being released from stock, with the consideration of shock risen from transit and relay mounting, relay would be changed to “set” or "reset" status, therefore, when application (connecting the power supply), please reset the relay to “set” or “reset” status on request.
2. In order to maintain “set” or “reset” status, energized voltage to coil should reach the rated voltage, impulse width should be 5 times more than “set” or “reset” time. Do not energize voltage to “set” coil and “reset” coil simultaneously. And also long energized time (more than 1 min) should be avoided.
3. Keep the product away from strong magnetic field during transportation, storage and application, to avoid change of set/reset voltage.

Disclaimer

The specification is for reference only. See to "Terminology and Guidelines" for more information. Specifications subject to change without notice. We could not evaluate all the performance and all the parameters for every possible application. Thus the user should be in a right position to choose the suitable product for their own application. If there is any query, please contact Hongfa for the technical service. However, it is the user’s responsibility to determine which product should be used only.

© Xiamen Hongfa Electroacoustic Co., Ltd. All rights of Hongfa are reserved.