DATASHEET - M22S-PVL30



Stop/switching off button, RMQ-Titan, Mushroom-shaped, 30 mm, Illuminated with LED element, Pull-to-release function, Black, yellow, RAL 9005

Part no. M22S-PVL30
Catalog No. 197541

Delivery program

Product range			RMQ-Titan
Basic function			STOP pushbuttons Emergency stop pushbuttons
Mounting hole diameter	∅	mm	22.5
Single unit/Complete unit			Single unit
Design			Mushroom-shaped
Diameter	∅	mm	30
Illumination			Illuminated with LED element
			Pull-to-release function
Colour			
Mushroom head			Black
			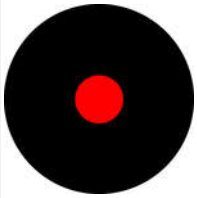
Base			yellow
RAL Value			RAL 9005
Degree of Protection			IP65, IP66, IP69
Connection to SmartWire-DT			yes with SWD-RMQ connections
Actuator travel and actuation force as per DIN EN 60947-5-1, K.5.4.1			
Minimum force for positive opening	N		0
Instructions			Max. Configuration: 4 x M22-(C)K01, …10 or 2 x M22-(C)K02, …20, …11 and 1 x M22-(F)LED... When using M22-PVL… with 1 x M22-K01SMC10 (single channel), article M22-XSMC (order no.: 173030) is required. Order this item separately.

Technical data

General

Standards			EN 50581:2012 EN 60947-5-1:2017 EN 60947-5-5:1997 + A1:2005 + A11:2013 + A2:2017 EN ISO 13850:2015 2006/42/EC Machinery Directive
certificate			CE, EAC UL, CSA, CCC
Lifespan, mechanical	Operations		150000
Operating frequency	Operations/h		≦ 600
Actuating force		n	≦ 50
Climatic proofing			Damp heat, constant, to IEC 60068-2-78 Damp heat, cyclic, to IEC 60068-2-30
Degree of Protection			IP65, IP66, IP69
Ambient temperature			
Open		°C	-25 - +70
Mounting position			As required
Mechanical shock resistance		g	50 Shock duration 11 ms Sinusoidal according to IEC 60068-2-27

Design verification as per IEC/EN 61439

Technical data for design verification			
Rated operational current for specified heat dissipation	I_n	A	0
Heat dissipation per pole, current-dependent	P_{vid}	W	0
Equipment heat dissipation, current-dependent	P_{vid}	W	0
Static heat dissipation, non-current-dependent	P_{vs}	W	0
Heat dissipation capacity	P_{diss}	W	0
Operating ambient temperature min.		°C	-25
Operating ambient temperature max.		°C	70
IEC/EN 61439 design verification			
10.2 Strength of materials and parts			
10.2.2 Corrosion resistance			Meets the product standard's requirements.
10.2.3.1 Verification of thermal stability of enclosures			Meets the product standard's requirements.
10.2.3.2 Verification of resistance of insulating materials to normal heat			Meets the product standard's requirements.
10.2.3.3 Verification of resistance of insulating materials to abnormal heat and fire due to internal electric effects			Meets the product standard's requirements.
10.2.4 Resistance to ultra-violet (UV) radiation			Please enquire
10.2.5 Lifting			Does not apply, since the entire switchgear needs to be evaluated.
10.2.6 Mechanical impact			Does not apply, since the entire switchgear needs to be evaluated.
10.2.7 Inscriptions			Meets the product standard's requirements.
10.3 Degree of protection of ASSEMBLIES			Does not apply, since the entire switchgear needs to be evaluated.
10.4 Clearances and creepage distances			Meets the product standard's requirements.
10.5 Protection against electric shock			Does not apply, since the entire switchgear needs to be evaluated.
10.6 Incorporation of switching devices and components			Does not apply, since the entire switchgear needs to be evaluated.
10.7 Internal electrical circuits and connections			Is the panel builder's responsibility.
10.8 Connections for external conductors			Is the panel builder's responsibility.
10.9 Insulation properties			
10.9.2 Power-frequency electric strength			Is the panel builder's responsibility.
10.9.3 Impulse withstand voltage			Is the panel builder's responsibility.
10.9.4 Testing of enclosures made of insulating material			Is the panel builder's responsibility.
10.10 Temperature rise			Not applicable.
10.11 Short-circuit rating			Is the panel builder's responsibility. The specifications for the switchgear must be observed.
10.12 Electromagnetic compatibility			Is the panel builder's responsibility. The specifications for the switchgear must be observed.
10.13 Mechanical function			The device meets the requirements, provided the information in the instruction leaflet (IL) is observed.

Technical data ETIM 8.0

Low-voltage industrial components (EG000017) / Front element for mushroom push-button (EC001038)

Electric engineering, automation, process control engineering / Low-voltage switch technology / Command and alarm device / Front element for mushroom push-button actuators (ecl@ss10.0.1-27-37-12-12 [AKF030014])

Colour button			Black
Construction type lens			Round
Diameter cap		mm	30
Hole diameter		mm	22.5
Width opening		mm	0
Height opening		mm	0
Degree of protection (IP)			IP66
Degree of protection (NEMA)			4X
Type of button			High
Suitable for illumination			Yes
With lighting			No
Supply voltage lamp		V	0
Switching function latching			Yes
Spring-return			No
With front ring			No

Material front ring		Other
Colour front ring		Other
Suitable for emergency stop		No
Unlocking method		Pull-release

Approvals

North America Certification		Request filed for UL, CSA certified

Dimensions

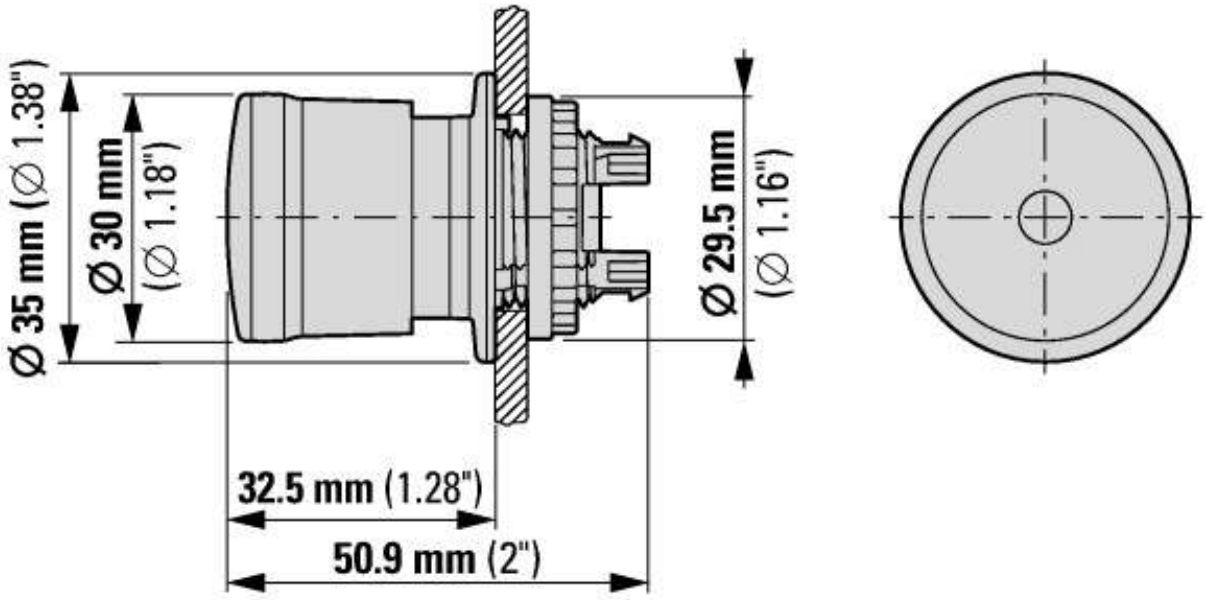

Additional product information (links)

IL04716002Z (AWA1160-1745) RMQ-Titan system	
IL04716002Z (AWA1160-1745) RMQ-Titan system	https://es-assets.eaton.com/DOCUMENTATION/AWA_INSTRUCTIONS/IL04716002Z2021_07.pdf

© 07/2022 by Eaton Industries GmbH