IG5595

Inductive sensor

IGA2005-FRKG/US

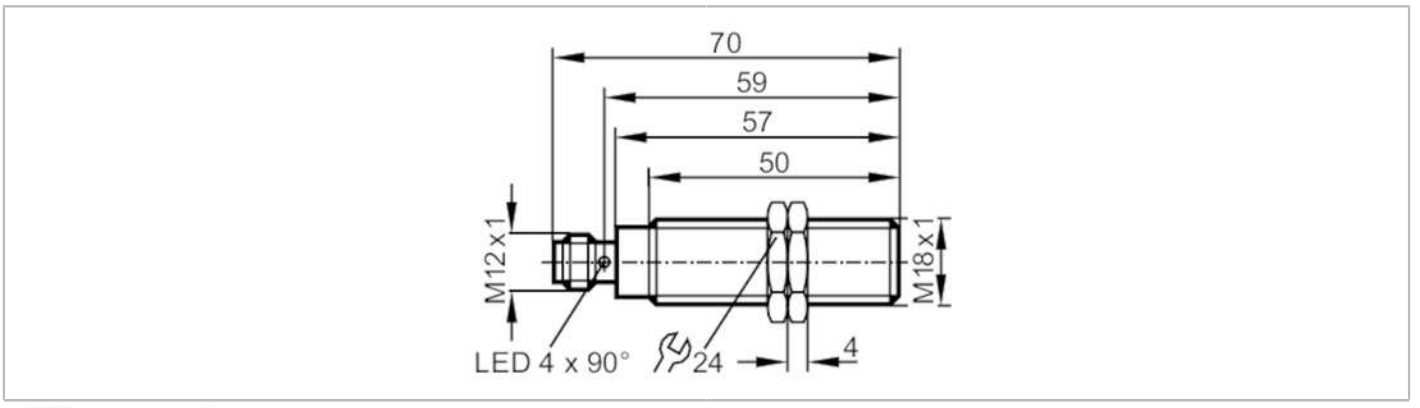

Product characteristics		
Electrical design		PNP/NPN
Output function		normally open / normally closed; (selectable)
Sensing range	[mm]	5
Housing		threaded type
Dimensions	[mm]	M18 x 1 / L = 70
Application		
Special feature		Gold-plated contacts
Electrical data		
Operating voltage	[V]	10...55 DC
Current consumption	[mA]	< 10
Protection class		II
Reverse polarity protection		yes
Outputs		
Electrical design		PNP/NPN
Output function		normally open / normally closed; (selectable)
Max. voltage drop switching output DC	[V]	2.5
Max. leakage current	[mA]	0.5
Permanent current rating of switching output DC	[mA]	400
Switching frequency DC	[Hz]	700
Short-circuit protection		yes
Type of short-circuit protection		pulsed
Overload protection		yes
Detection zone		
Sensing range	[mm]	5
Real sensing range Sr	[mm]	5 ± 10 %
Operating distance	[mm]	0...4.05
Accuracy / deviations		
Correction factor		steel: 1 / stainless steel: 0.7 / brass: 0.5 / aluminium: 0.4 / copper: 0.3

IG5595

Inductive sensor

IGA2005-FRKG/US

Hysteresis	[% of Sr]	1...20	
Switch point drift	[% of Sr]	-10...10	
Operating conditions			
Ambient temperature	[°C]	-25...70	
Protection		IP 67	
Tests / approvals			
EMC		EN 61000-4-2 ESD	4 kV CD / 8 kV AD
		EN 61000-4-3 HF radiated	10 V/m
		EN 61000-4-4 Burst	2 kV
		EN 61000-4-5 Surge	0,5 kV line to line, Ri: 2 Ohm
		EN 61000-4-6 HF conducted	10 V
		EN 55011	class B
MTTF	[years]	1775	
UL approval		Ta	-25...70 °C
		Enclosure type	Type 1
		power supply	Class 2
		File number UL	E174191
Mechanical data			
Weight	[g]	54.1	
Housing		threaded type	
Mounting		flush mountable	
Dimensions	[mm]	M18 x 1 / L = 70	
Thread designation		M18 x 1	
Materials		brass white bronze coated; sensing face: PBT	
Displays / operating elements			
Display		switching status	4 x 90° LED, yellow
Accessories			
Items supplied		lock nuts: 2	
Remarks			
Pack quantity		1 pcs.	

IG5595

Inductive sensor

IGA2005-FRKG/US

Electrical connection - plug

Connector: 1 x M12; coding: A; Contacts: gold-plated

