TI01147F/00/EN/04.21
71516060
2021-01-26

Technical Information
Liquiphant FTL31

Vibronic



Point level switch for liquids

Application

The Liquiphant FTL31 is a point level switch for liquids and is used in tanks, vessels and pipes.

It is used for overfill protection or pump protection in cleaning and filter systems as well as in cooling and lubrication vessels, for instance.

Ideal for applications in which float switches or conductive, capacitance and optical sensors have been used up to now. The Liquiphant FTL31 also works in areas where these measuring principles are not suitable due to conductivity, buildup, turbulence, flow conditions or air bubbles.

The Liquiphant FTL31 can be used for process temperatures up to:
- 100 °C (212 °F)
- 150 °C (302 °F)

Not suitable for hazardous areas.

The use of the Liquiphant FTL33 is recommended for hygiene areas.

Your benefits

- Operational safety, reliability and universal application thanks to the tuning fork measuring principle
- Robust stainless steel housing (316L), optionally available with M12x1 plug with IP69 protection
- External function test with test magnet
- Onsite function check possible thanks to LED indication
- Compact design for easy installation even in confined conditions or hard-to-access areas

Endress+Hauser
People for Process Automation

Table of contents

Important document information 3
Symbols used 3

Function and system design 4
Measuring principle 4
Measuring system 4

Input 5
Measured variable 5
Measuring range 5

Output 5
Switch output 5
Operating modes 5

Power supply 5
Supply voltage 5
Power consumption 5
Current consumption 5
Residual ripple 5
Residual voltage 5
Electrical connection 6
Cable entry 13
Cable specification 13
Overvoltage protection 13

Performance characteristics 14
Reference operating conditions 14
Switch point 14
Hysteresis 14
Non-repeatability 14
Influence of ambient temperature 14
Influence of medium temperature 14
Influence of medium pressure 14
Switching delay 14
Switch-on delay 14
Measuring frequency 14
Measured error 14

Installation 15
Orientation 15
Installation instructions 15
Length of connecting cable 17

Environment 18
Ambient temperature range 18
Storage temperature 18
Climate class 18
Altitude 18
Degree of protection 19
Shock resistance 19
Vibration resistance 19
Electromagnetic compatibility 19
Reverse polarity protection 19
Short-circuit protection 19

Process 20
Process temperature range 20
Process pressure range 20
Density 20
State of aggregation 20
Viscosity 20
Solids contents 20
Lateral loading capacity 20

Mechanical construction 21
Design 21
Plug 22
Tuning fork 22
Sensor type 23
Weight 26
Materials 26
Surface roughness 27

Operability 28
LED display 28
Function test with test magnet 28

Certificates and approvals 29
CE mark 29
EAC conformity 29
RCM-Tick marking 29
Approval 29
Overfill protection 29
Marine approvals 29
CRN approval 29
Inspection certificates 29
Manufacturer declaration 29
Pressure Equipment Directive 29
Other standards and guidelines 29

Ordering information 30
Ordering information 30
Services (optional) 30

Accessories 30
Weld-in adapter 30
Plug-in jack, cable 30
Additional accessories 32

Supplementary documentation 33
Operating Instructions Liquiphant FTL31 33
Additional documentation 33
Certificates 33

Important document information

Symbols used

Symbols for certain types of information and graphics

Permitted
Procedures, processes or actions that are permitted

Forbidden
Procedures, processes or actions that are forbidden

Tip
Indicates additional information

Reference to documentation

Reference to graphic

Notice or individual step to be observed

1., 2., 3.
Series of steps

Result of a step

1, 2, 3, ...
Item numbers

A, B, C, ...
Views

Function and system design

Measuring principle

A piezoelectric drive causes the tuning fork of the device to vibrate at its resonance frequency. When the tuning fork is immersed in a liquid, its intrinsic frequency changes due to the change in density of the surrounding medium. The electronics system in the point level switch monitors the resonance frequency and indicates whether the tuning fork is vibrating in air or is covered by liquid.

Measuring system

The measuring system consists of a point level switch, e.g. for connection to programmable logic controllers (PLC).

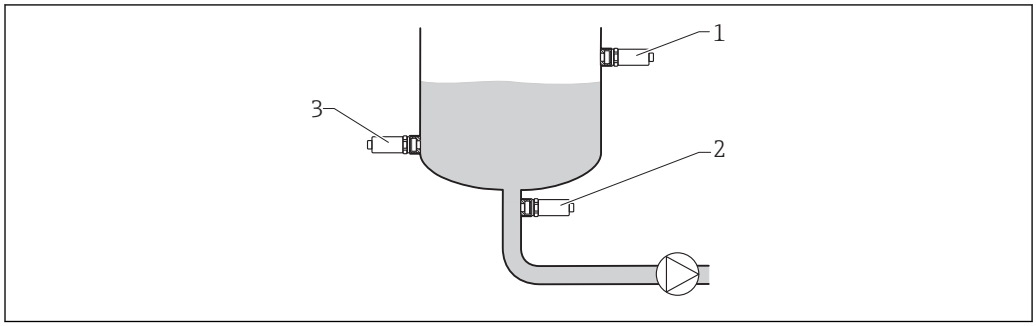

1 Installation examples

1 Overfill protection or upper level detection (maximum safety)
2 Dry running protection for pump (minimum safety)
3 Lower level detection (minimum safety)

Input

Measured variable

Density

Measuring range

> 0.7 g/cm³ (optionally available: > 0.5 g/cm³)

Output

Switch output

Switching behavior: On/Off

Function
3-wire DC-PNP:
Positive voltage signal at the switch output of the electronics (PNP), switching capacity 200 mA
2-wire AC/DC:
Load switching in the power supply line, switching capacity 250 mA

Operating modes

The device has two operating modes: maximum safety (MAX) and minimum safety (MIN).

By choosing the corresponding operating mode, the user ensures that the device also switches in a safety-oriented manner even in an alarm condition, e.g. if the power supply line is disconnected.

- **Maximum safety (MAX)**
  The device keeps the electronic switch closed as long as the liquid level is below the fork. Sample application: overfill prevention
- **Minimum safety (MIN)**
  The device keeps the electronic switch closed as long as the fork is immersed in liquid. Sample application: Dry running protection for pumps

The electronic switch opens if the limit is reached, if a fault occurs or the power fails (quiescent current principle).

Power supply

Supply voltage

DC-PNP
10 to 30 V DC, 3-wire

AC/DC
20 to 253 VAC/DC, 2-wire

Power consumption

DC-PNP
< 975 mW

AC/DC
< 850 mW

Current consumption

DC-PNP
< 15 mA

AC/DC
< 3.8 mA

Residual ripple

DC-PNP
5 Vss 0 to 400 Hz

AC/DC
—

Residual voltage

DC-PNP
U < 3 V (for switched through transistor)

AC/DC
—

Electrical connection

Two electronic versions and three different connections are available for the device.

- Electronic version 3-wire DC-PNP with connection; M12 plug, valve plug or cable
- Electronic version 2-wire AC/DC with connection; valve plug or cable

A fine-wire fuse is necessary for operation: 500 mA slow-blow.

Electronic version 3-wire DC-PNP

3-wire DC-PNP is preferably used in conjunction with programmable logic controllers (PLC), DI modules as per EN 61131-2. Positive signal at the switch output of the electronics (PNP).

Voltage source: non-hazardous contact voltage or Class 2 circuit (North America).

Connection with M12 plug

Depending on the analysis of the switch outputs, the device works in the MAX (maximum safety) or MIN (minimum safety) mode.

A cable is optionally available

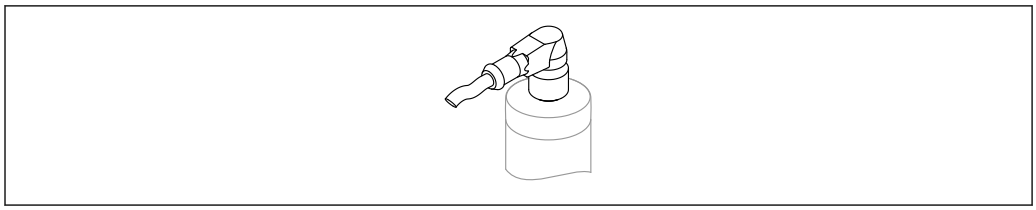

2 *M12 plug*

Maximum safety		
Terminal assignment	**MAX output**	**LED yellow (ye) 2**
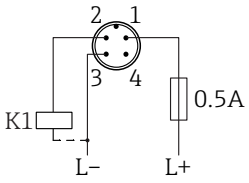		
		
		

Symbols	Description
	Yellow LED (ye) lit
	Yellow LED (ye) not lit
K1	External load

Minimum safety		
Terminal assignment	**MIN output**	**LED yellow (ye) 1**
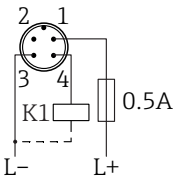	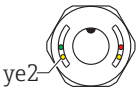	
		
		

Symbols	Description
	Yellow LED (ye) lit
	Yellow LED (ye) not lit
K1	External load

Function monitoring with M12 plug

Using a two-channel analysis, function monitoring of the sensor can be implemented in addition to level monitoring, e.g. per relay switch, PLC, AS-i Bus I/O module.

When both outputs are connected, the MIN and MAX outputs assume opposite states when the device is operating fault-free (XOR). In the event of an alarm condition or a line break, both outputs are deenergized.

Connection for function monitoring using XOR operation

Terminal assignment	MAX output	LED yellow (ye) 2	MIN output	LED yellow (ye) 1	Red LED (rd)
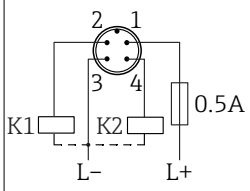	 A0037919		 A0037918		
	 1 2 A0045070		 1 4 A0045075		
	 1 2 A0045069		 1 4 A0045076		
	 1 2 A0045070		1 4 A0045076		

Symbols	Description
	LED lit
	LED not lit
	Fault or warning
K1 / K2	External load

Connection with valve plug

Depending on the assignment of the plug or the wiring of the cable, the device works in either the MAX or MIN operating mode.

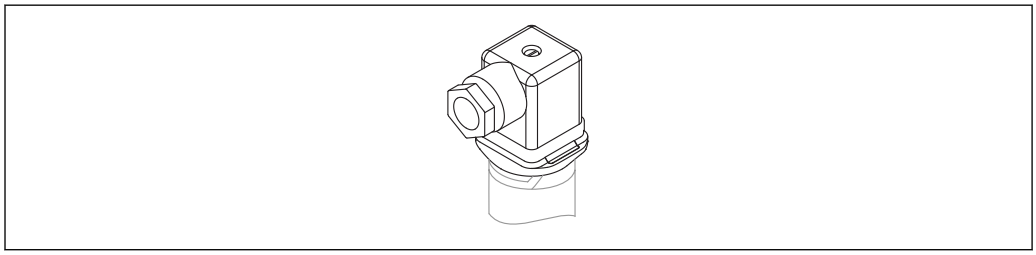

A0022900

3 Valve plug

3-wire DC-PNP		
Terminal assignment	**MAX operating mode**	**Yellow LED (ye)**
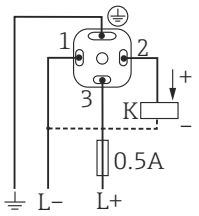	 3 2 A0045077	
	 3 2 A0045078	

Symbols	**Description**
	Yellow LED (ye) lit
	Yellow LED (ye) not lit
K	External load

3-wire DC-PNP		
Terminal assignment	**MIN operating mode**	**Yellow LED (ye)**
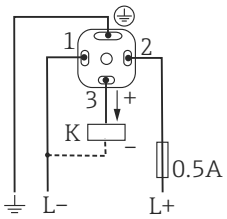	 2 3 A0045080	
	 2 3 A0045079	

Symbols	**Description**
	Yellow LED (ye) lit
	Yellow LED (ye) not lit
K	External load

Connection with cable

Depending on the assignment of the plug or the wiring of the cable, the device works in either the MAX or MIN operating mode.

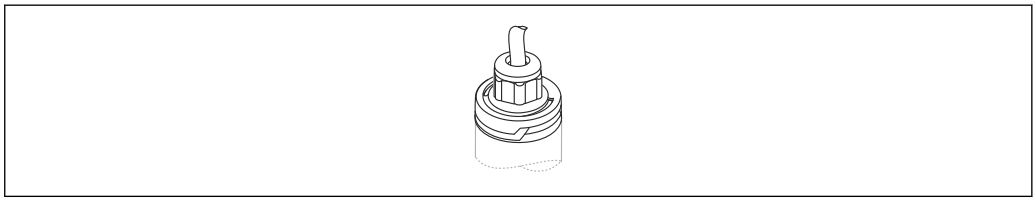

4 *Cable (cannot be disassembled)*

3-wire DC-PNP		
Terminal assignment	**MAX operating mode**	**Yellow LED (ye)**
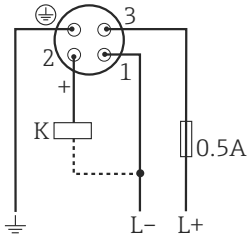	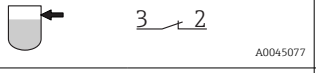	
	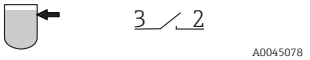	
Core colors: 1 = BK (black) 2 = GR (gray) 3 = BN (brown) Ground = GNYE (green-yellow)		
Symbols	**Description**	
	Yellow LED (ye) lit	
	Yellow LED (ye) not lit	
K	External load	

3-wire DC-PNP		
Terminal assignment	**MIN operating mode**	**Yellow LED (ye)**
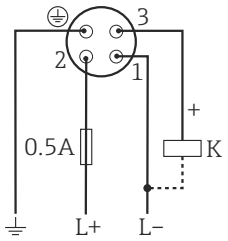	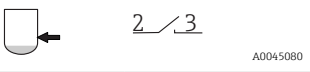	
	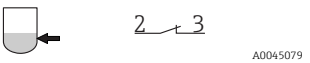	
Core colors: 1 = BK (black) 2 = GR (gray) 3 = BN (brown) Ground = GNYE (green-yellow)		
Symbols	**Description**	
	Yellow LED (ye) lit	
	Yellow LED (ye) not lit	
K	External load	

Electronic version 2-wire AC/DC

The load is switched via an electronic switch directly in the power supply circuit. Always connect in series with a load!

Not suitable for connection to low-voltage PLC inputs!

Selection tool for relays

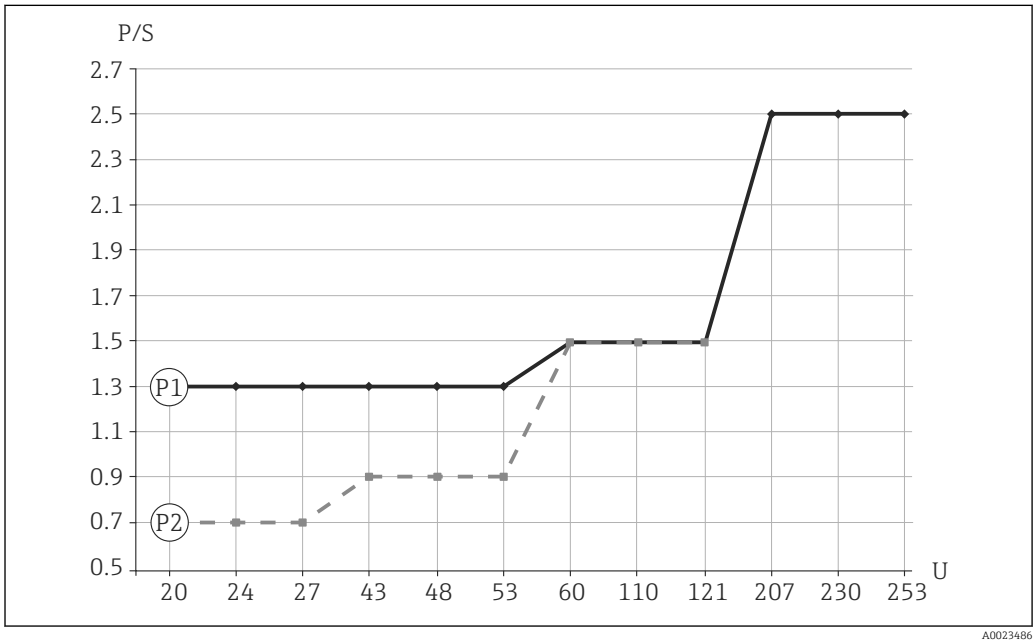

5 Minimum rated power of the load

P/S Rated power in [W] / [VA]
U Operating voltage in [V]

Item	Supply voltage	Rated power	
		min	max
P1 AC mode	24 V 110 V 230 V	> 1.3 VA > 1.5 VA > 2.5 VA	< 6 VA < 27.5 VA < 57.5 VA
P2 DC mode	24 V 48 V 60 V	> 0.7 W > 0.9 W > 1.5 W	< 6 W < 12 W < 15 W

Relays with a lower rated power can be operated by means of an RC module connected in parallel (optional).

Connection with valve plug

Depending on the assignment of the plug or the wiring of the cable, the device works in either the MAX or MIN operating mode.

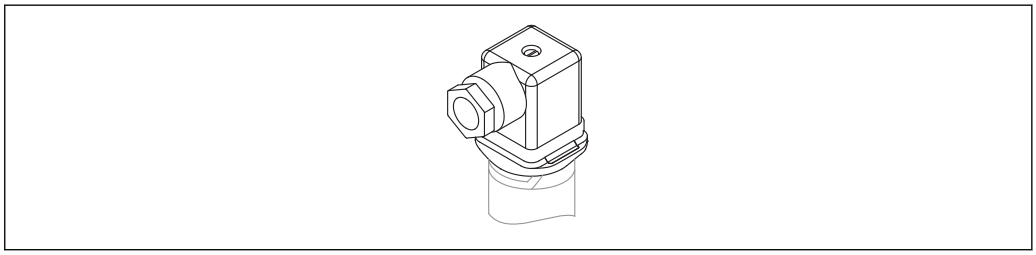

A0022900

6 *Valve plug*

2-wire AC/DC		
Terminal assignment	**MAX operating mode**	**Yellow LED (ye)**
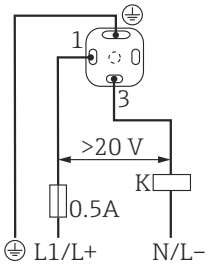 A0021219	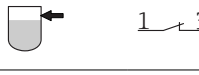 A0045072	
	 A0045074	

Symbols	Description
	Yellow LED (ye) lit
	Yellow LED (ye) not lit
K	External load

2-wire AC/DC		
Terminal assignment	**MIN operating mode**	**Yellow LED (ye)**
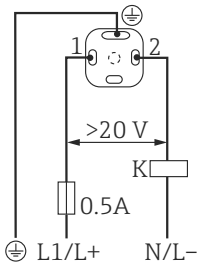 A0021220	 A0045070	
	 A0045069	

Symbols	Description
	Yellow LED (ye) lit
	Yellow LED (ye) not lit
K	External load

Connection with cable

Depending on the assignment of the plug or the wiring of the cable, the device works in either the MAX or MIN operating mode.

When the cable is wired, one wire of the cable does not have any function in each of the operating modes (brown in the case of MIN, and gray in the case of MAX). The cable with no function must be secured against inadvertent contact.

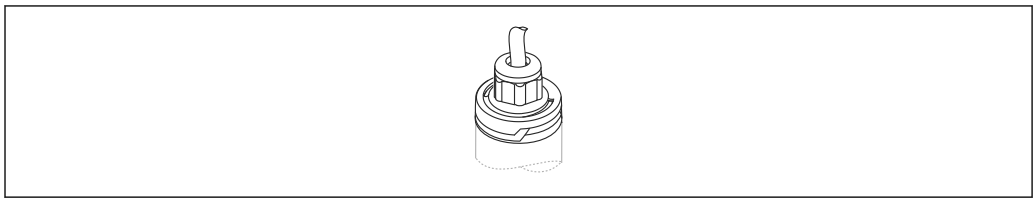

A0022902

7 Cable (cannot be disassembled)

2-wire AC/DC		
Terminal assignment	**MAX operating mode**	**Yellow LED (ye)**
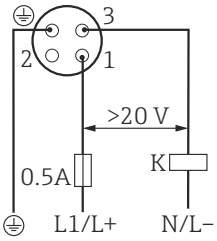 A0022161	 A0045072	
	 A0045074	
Core colors: 1 = BK (black) 2 = GR (gray) 3 = BN (brown) Ground = GNYE (green-yellow)		
Symbols	**Description**	
	Yellow LED (ye) lit	
	Yellow LED (ye) not lit	
K	External load	

2-wire AC/DC		
Terminal assignment	**MIN operating mode**	**Yellow LED (ye)**
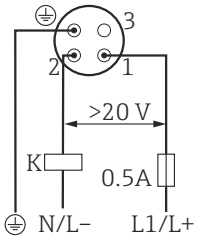 A0022225	 A0045070	
	 A0045069	
Core colors: 1 = BK (black) 2 = GR (gray) 3 = BN (brown) Ground = GNYE (green-yellow)		
Symbols	**Description**	
	Yellow LED (ye) lit	
	Yellow LED (ye) not lit	
K	External load	

Cable entry

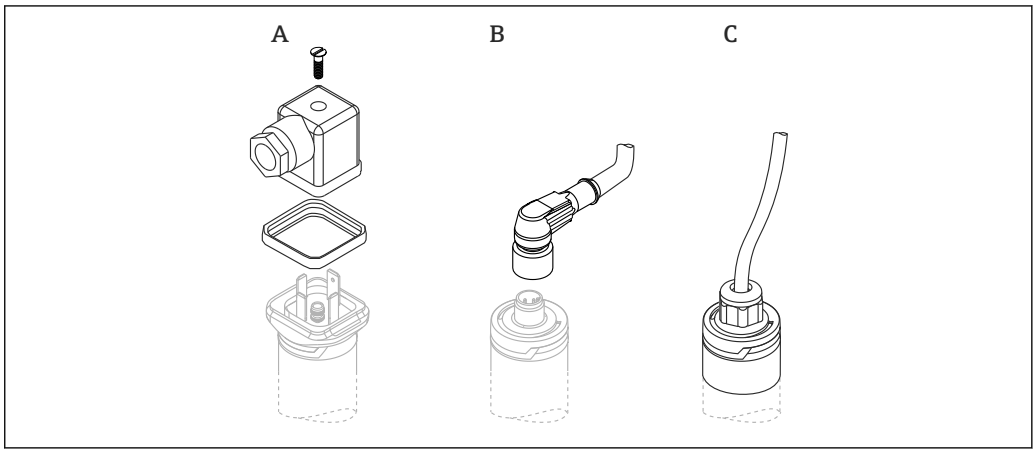

A0020928

A Valve plug (M16x1.5; NPT ½"; QUICKON)
B M12 plug
C Cable 5 m (16 ft); secured in place on delivery and cannot be disassembled

Cable specification

- Valve plug
  - Cable cross-section: max. 1.5 mm^2 (AWG 16)
  - Ø 3.5 to 8 mm (0.14 to 0.26 in)
- M12 plug: IEC 60947-5-2
- Cable (3LPE)
  - Cable cross-section: 0.75 mm^2 (AWG 20)
  - Ø 6 to 8 mm (0.24 to 0.31 in)
  - Material: PUR

Overvoltage protection

Overvoltage category II

Performance characteristics

Reference operating conditions	Ambient temperature:	+25 °C (+77 °F)
	Process pressure:	1 bar (14.5 psi)
	Fluid:	Water (density: approx. 1 g/cm³, viscosity 1 mm²/s)
	Medium temperature:	25 °C (77 °F)
	Density setting:	> 0.7 g/cm³
	Switching time delay:	Standard (0.5 s, 1 s)
Switch point	13 mm (0.51 in)±1 mm	
Hysteresis	max. 3 mm (0.12 in)	
Non-repeatability	±1 mm (0.04 in) in accordance with DIN 61298-2	
Influence of ambient temperature	Negligible	
Influence of medium temperature	−25 µm (984 µin)/°C	
Influence of medium pressure	−20 µm (787 µin)/bar	
Switching delay	▪ 0.5 s when tuning fork is covered ▪ 1.0 s when tuning fork is uncovered ▪ Optionally available: 0.2 s; 1.5 s or 5 s (when the tuning fork is covered and uncovered)	
Switch-on delay	max. 3 s	
Measuring frequency	approx. 1 100 Hz in air	
Measured error	In event of device change: ±2 mm (0.08 in) as per DIN 61298-2	

Installation

Orientation

The point level switch can be installed in any position in a vessel, pipe or tank. Foam formation does not affect the function.

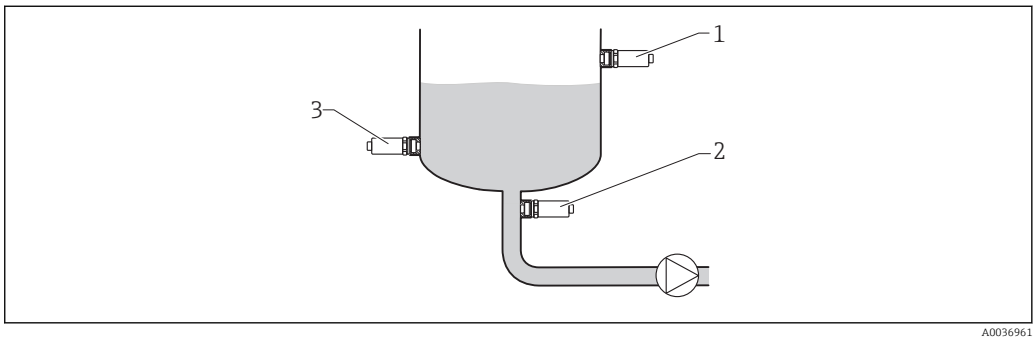

8 *Installation examples*

1 Overfill protection or upper level detection (maximum safety)
2 Dry running protection for pump (minimum safety)
3 Lower level detection (minimum safety)

Installation instructions

Switch point

The switch point (A) on the sensor depends on the orientation of the point level switch (water +25 °C (+77 °F), 1 bar (14.5 psi).

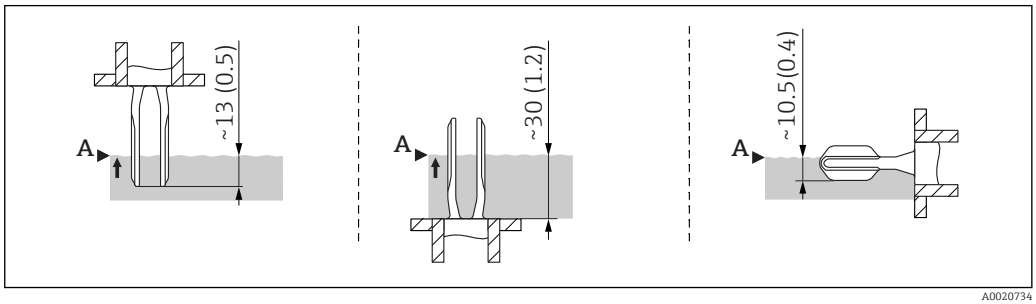

9 *Orientation: vertical from above, vertical from below, horizontal; dimensions in mm (in)*

Short tube version

The use of the short tube ensures that the switch point is at the same level as in the previous Liquiphant FTL260 model when an identical thread is selected. In this way, the device can be replaced quickly and easily. (Applies for process connections G 1" weld-in adapter for flush mount installation, MNPT 1" and R 1")

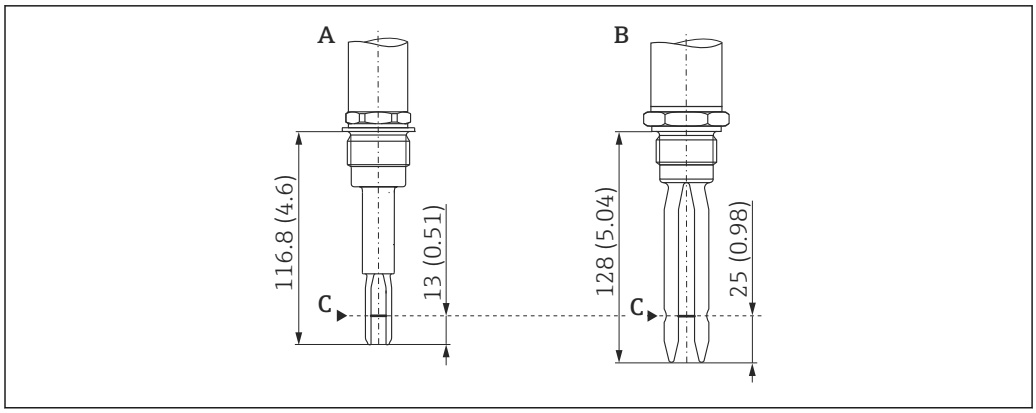

Dimensions mm (in)
A Liquiphant FTL31 with short tube
B Liquiphant FTL260
C Switch point

Installation in pipes

During installation, pay attention to the position of the fork in order to minimize turbulence in the pipe.

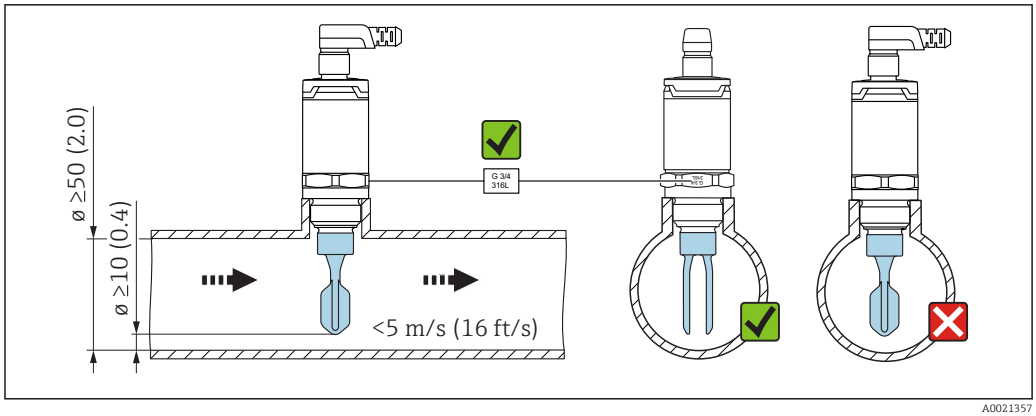

Dimensions mm (in)

Installation in vessels

If installed horizontally, pay attention to the position of the tuning fork to ensure that the liquid can drip off.

The electrical connection, e.g. M12 plug, should be pointing down with the cable. This can prevent moisture from penetrating.

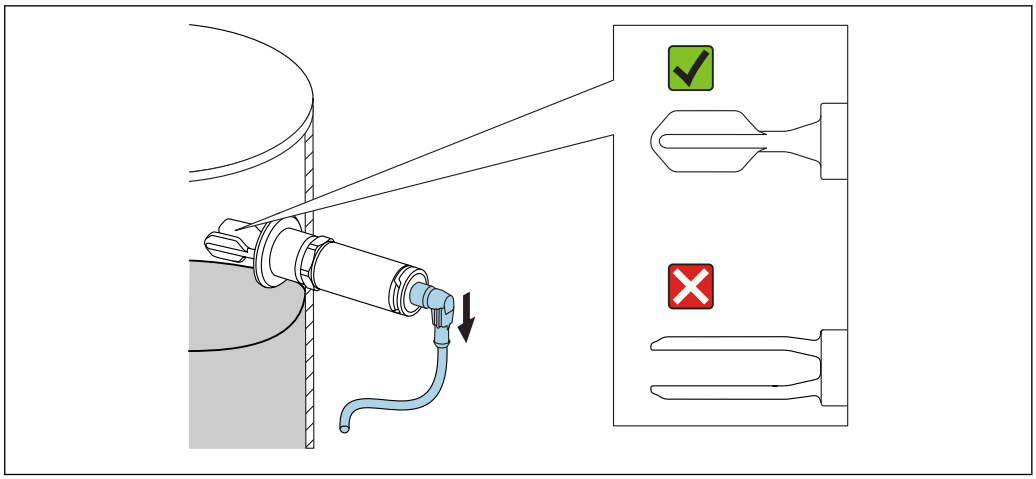

A0021034

10 Position of the fork in the case of horizontal installation in a vessel

Distance from wall

Ensure that there is sufficient distance between the expected buildup on the tank wall and the fork. Recommended distance from wall ≥10 mm (0.39 in).

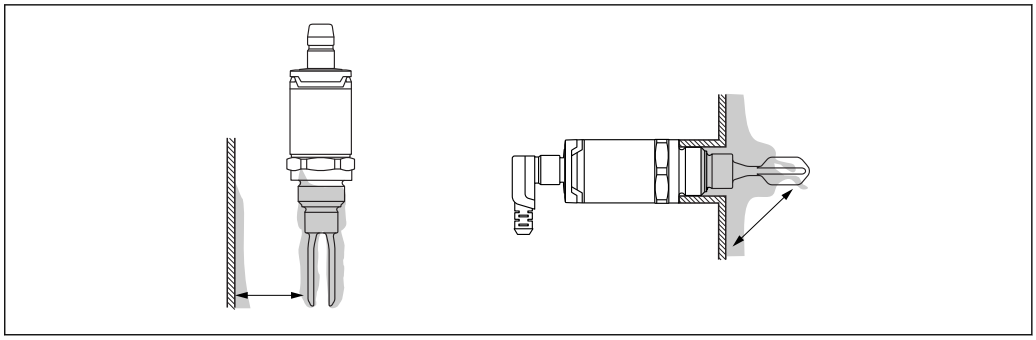

A0022272

Length of connecting cable

- Up to 1 000 m (3 281 ft)
- Max. 25 Ω/wire, total capacitance < 100 nF

Environment

Ambient temperature range −40 to +70 °C (−40 to +158 °F)

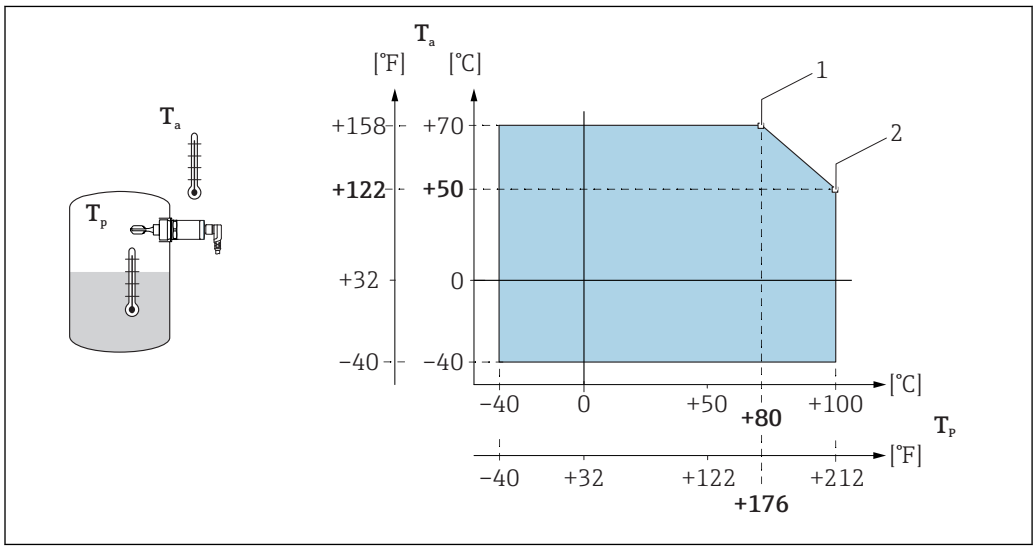

11 *Derating curve: 100 °C (212 °F)*

1 I_{max}: 200 mA (DC-PNP), 250 mA (AC/DC)
2 I_{max}: 150 mA (DC-PNP), 150 mA (AC/DC)
Ta Ambient temperature range
Tp Process temperature

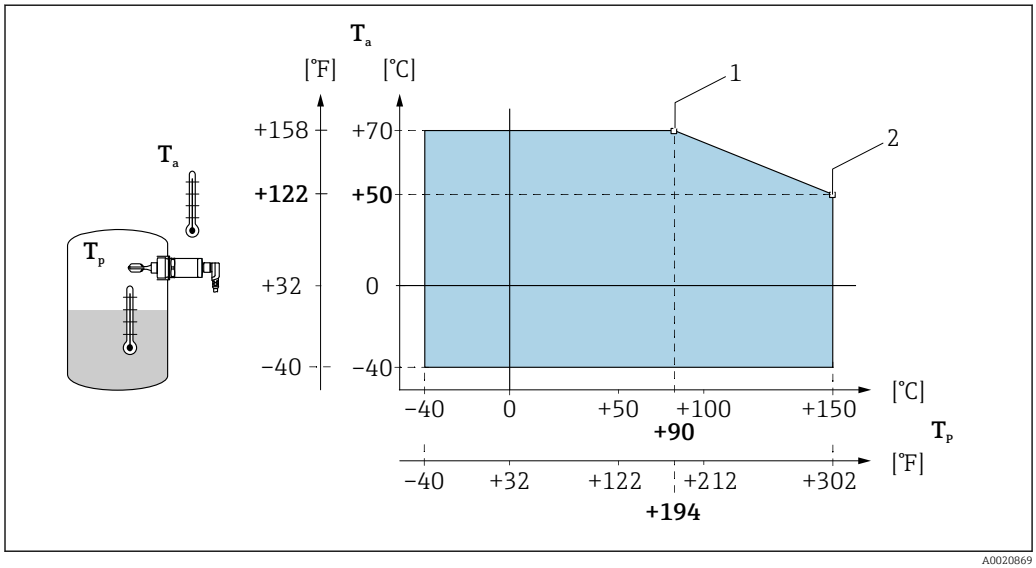

12 *Derating curve: 150 °C (302 °F)*

1 I_{max}: 200 mA (DC-PNP), 250 mA (AC/DC)
2 I_{max}: 150 mA (DC-PNP), 150 mA (AC/DC)
Ta Ambient temperature range
Tp Process temperature

Storage temperature −40 to +85 °C (−40 to +185 °F)

Climate class DIN EN 60068-2-38/IEC 68-2-38: test Z/AD

Altitude Up to 2 000 m (6 600 ft) above sea level

Degree of protection

- IP65/67 NEMA Type 4X Enclosure (M12 plug)
- IP66/68/69 NEMA Type 4X/6P Enclosure (M12 plug for metal housing cover)
- IP65 NEMA Type 4X Enclosure (valve plug)
- IP66/68 NEMA Type 4X/6P Enclosure (cable)

Shock resistance

a = 300 m/s^2 = 30 g, 3 axes x 2 directions x 3 shocks x 18 ms,

as per test Ea, prEN 60068-2-27:2007

Vibration resistance

a(RMS) = 50 m/s^2, ASD = 1.25 $(m/s^2)^2$/Hz, f = 5 to 2 000 Hz, t = 3 x 2 h,

as per test Fh, EN 60068-2-64:2008

Electromagnetic compatibility

Electromagnetic compatibility in accordance with all relevant requirements of the EN 61326 series and NAMUR recommendation EMC (NE21). For details, refer to the EC Declaration of Conformity. The EC Declaration of Conformity is available in the Download Area of the Endress+Hauser website: www.endress.com → Downloads.

Reverse polarity protection

2-wire AC/DC

- AC mode: the device has reverse polarity protection.
- DC mode: in the event of reverse polarity the maximum safety mode is always detected. Check the wiring and perform a function check before commissioning. The device is not damaged in the event of reverse polarity.

3-wire DC-PNP

Integrated. In the event of reverse polarity, the device is deactivated automatically.

Short-circuit protection

2-wire AC/DC

During switching the sensor checks whether a load, e.g. relay or contactor, is present (load check). If an error occurs, the sensor is not damaged.
Smart monitoring: normal operation is resumed once the error is fixed.

3-wire DC-PNP

Overload protection/short-circuit protection at I > 200 mA; the sensor is not destroyed.
Intelligent monitoring: Testing for overload at intervals of approx. 1.5 s; normal operation resumes once the overload/short-circuit has been rectified.

Process

Process temperature range	−40 to +100 °C (−40 to +212 °F) −40 to +150 °C (−40 to +302 °F)
Process pressure range	Max. −1 to +40 bar (−14.5 to +580 psi)
Density	> 0.7 g/cm³ (optionally available: > 0.5 g/cm³)
State of aggregation	Liquid
Viscosity	1 to 10 000 mPa·s, dynamic viscosity
Solids contents	ø < 5 mm (0.2 in)
Lateral loading capacity	Lateral loading capacity of the tuning fork: maximum 200 N

Mechanical construction

Design

The point level switch is available in different versions, which can be assembled in accordance with user specifications.

The versions can be selected via the product structure in the Product Configurator, see the "Ordering information" section . Examples in the graphic below:

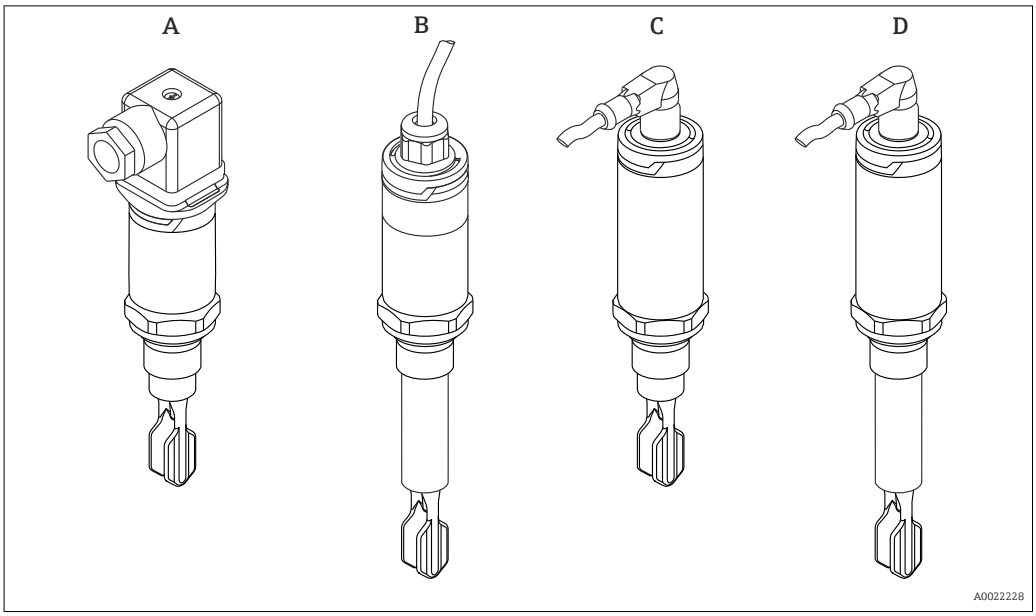

Versions	Examples			
	A	B	C	D
Electrical connection	Valve plug	Cable (cannot be disassembled)	M12 plug for housing cover IP66/68/69	M12 plug for housing cover IP65/67
Housing (sensor design) for process temperatures up to:	100 °C (212 °F) or 150 °C (302 °F)	100 °C (212 °F) or 150 °C (302 °F)	100 °C (212 °F) or 150 °C (302 °F)	100 °C (212 °F) or 150 °C (302 °F)
Sensor type	Compact version	Short tube version	Compact version	Short tube version

For detailed information on the process connections, see the "Mechanical construction" -> "Sensor type" section

For information on the short tube version, see the "Mounting" -> "Installation instructions" section

Plug

Dimensions

Dimensions mm (in)

The following graphics illustrate the plugs together with the suitable housing covers on the housing of the point level switch.

Electrical connection with housing cover	Designation
A 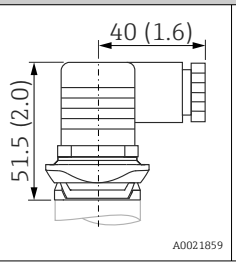 B 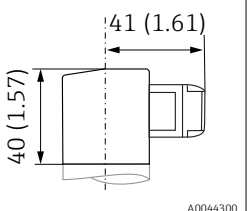	**A:** Valve plug M16, NPT ½" for housing cover: PPSU plastic (IP65) **B:** Valve plug QUICKON for housing cover: PPSU plastic (IP65)
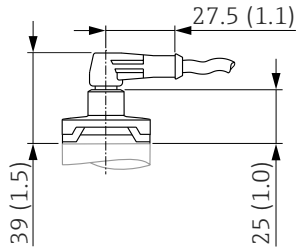	M12 plug for housing cover: PPSU plastic (IP65/67)
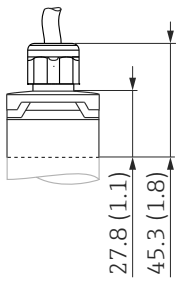	Captive cable with housing cover: PPSU plastic (IP66/68)

Tuning fork

Dimensions

Dimensions mm (in)

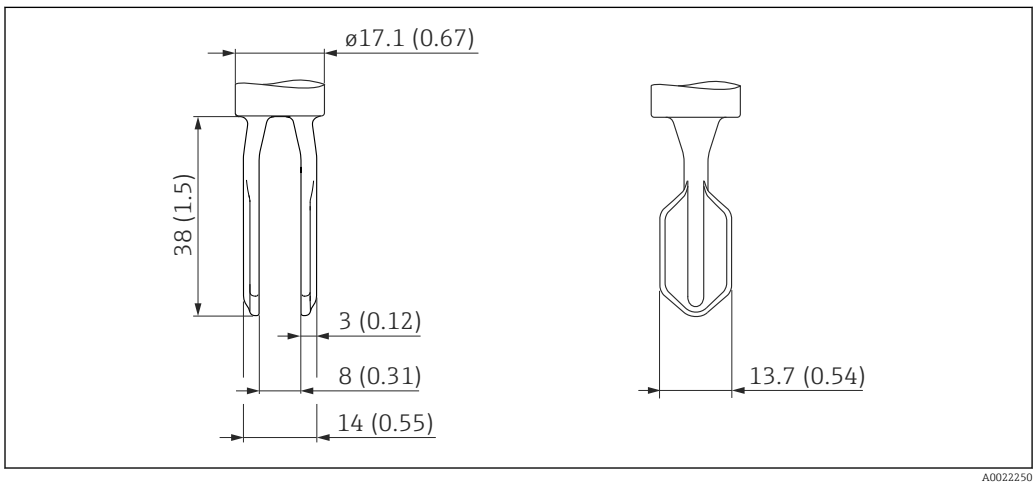

Sensor type

Dimensions

Dimensions mm (in)

The total dimensions of the device can vary depending on the plug selected.

Information on the following tables

- Meaning of symbols:
  * Dimension for process temperature max. 100 °C (212 °F)
  ** Dimension for process temperature max. 150 °C (302 °F)
- If several versions have the same dimensions, one example of the compact version and one example of the short tube version is given.
- The versions in the second column refer to the process connections in the product structure.

For information on weld-in adapters, see the "Weld-in adapters, process adapters and flanges" documentation, TI00426F.→ 33.

Available in the Download Area of the Endress+Hauser website (www.endress.com/downloads).

Dimensions	Version	Description
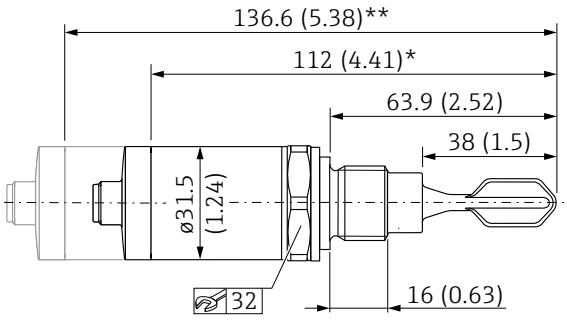 13 *Compact version, example G ½"*	WBJ WCJ	**Thread ISO 228 G ½"** **Thread ISO 228 G ¾"** ▪ Material: 316L ▪ Scope of delivery: flat seal (FA) ▪ Pressure and temperature (maximum): +40 bar (+580 psi) at +150 °C (+302 °F)
	W5J	**Thread ISO 228 G ¾" for flush mount installation in weld-in adapter** ▪ Material: 316L ▪ Scope of delivery: flat seal (FA) Accessory: weld-in adapter ▪ Scope of delivery: seal (VMQ) ▪ Pressure and temperature (maximum): +25 bar (+352 psi) at +150 °C (+302 °F) +40 bar (+580 psi) at +100 °C (+212 °F) The dimensions apply for G ½"; G ¾" and G ¾" for flush mount installation.
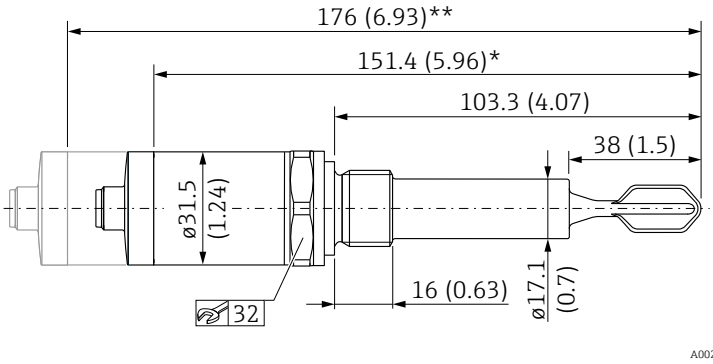 14 *Short tube version, example G ½"*		

Dimensions	Version	Description
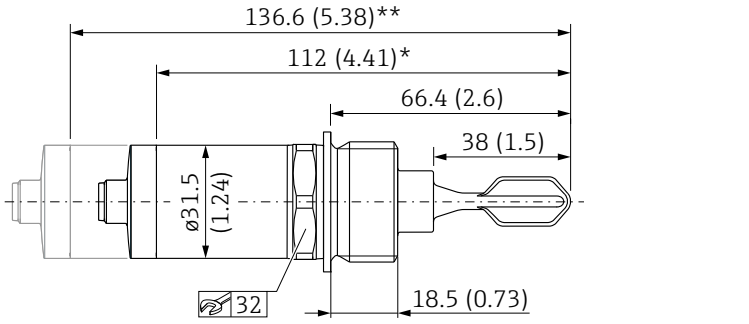 *15 Compact version* 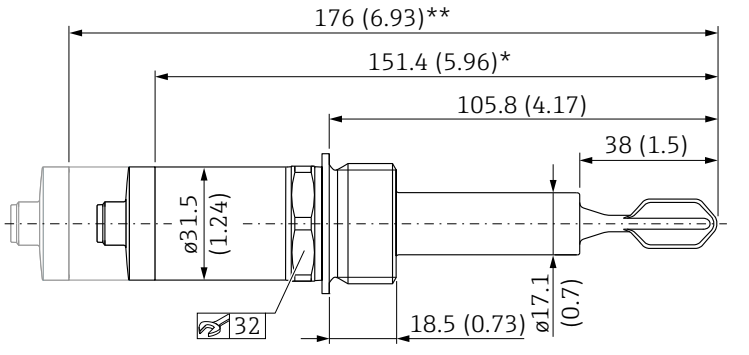 *16 Short tube version*	WDJ	**Thread ISO 228 G 1"** ▪ Material: 316L ▪ Scope of delivery: flat seal (FA) ▪ Pressure and temperature (maximum): +40 bar (+580 psi) at +150 °C (+302 °F)

Dimensions	Version	Description
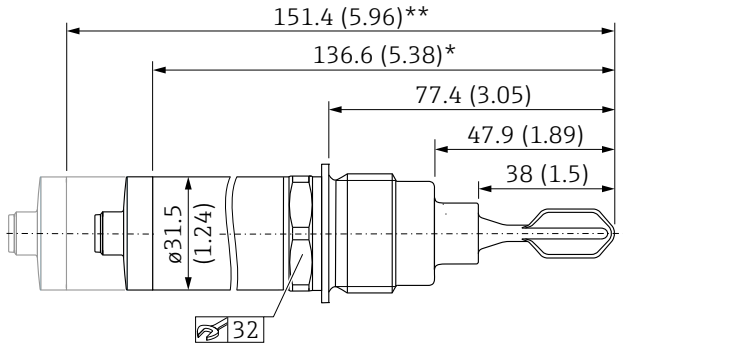 *17 Compact version* 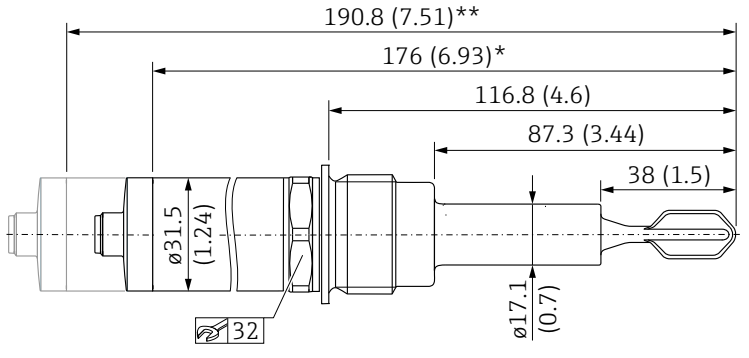 *18 Short tube version*	WSJ	**Thread ISO 228 G 1"** **for flush mount installation in weld-in adapter** ▪ Material: 316L ▪ Scope of delivery: flat seal (FA) Accessory: weld-in adapter ▪ Scope of delivery: seal (VMQ) ▪ Pressure and temperature (maximum): +25 bar (+362 psi) at +150 °C (+302 °F) +40 bar (+580 psi) at +100 °C (+212 °F)

Dimensions	Version	Description
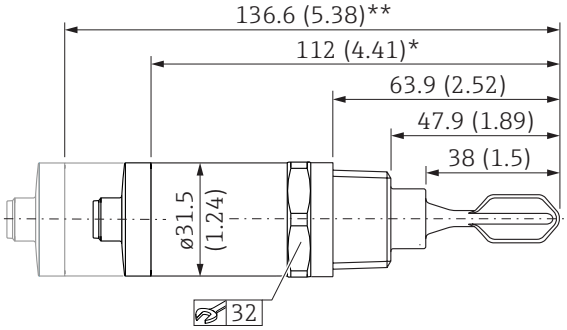 *19 Compact version, example MNPT ¾"*	VAJ	**Thread ASME MNPT ½"**
	VBJ	**Thread ASME MNPT ¾"**
	XBJ	**Thread EN10226 R ½"**
	XCJ	**Thread EN10226 R ¾"**
		Pressure and temperature (maximum): +40 bar (+580 psi) at +150 °C (+302 °F)
		The dimensions apply for MNPT ½", MNPT ¾"; R ½" and R ¾".
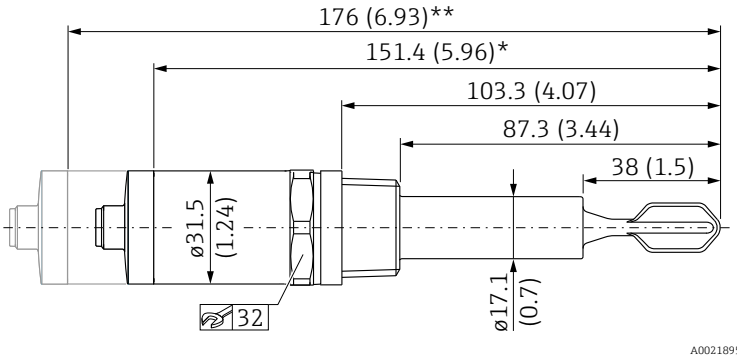 *20 Short tube version, example MNPT ¾"*		

Dimensions	Version	Description
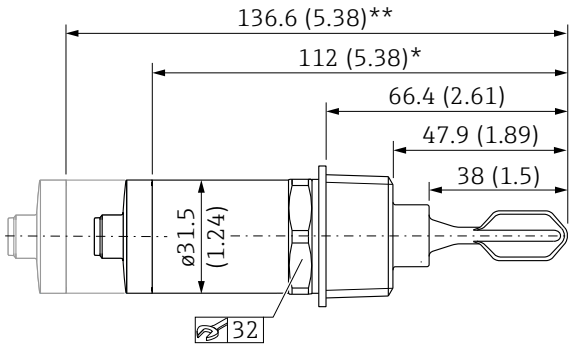 *21 Compact version, example MNPT 1"*	VCJ XDJ	**Thread ASME MNPT 1"** **Thread EN10226 R 1"** Pressure and temperature (maximum): +40 bar (+580 psi) at +150 °C (+302 °F) The dimensions apply for MNPT 1" and R 1".
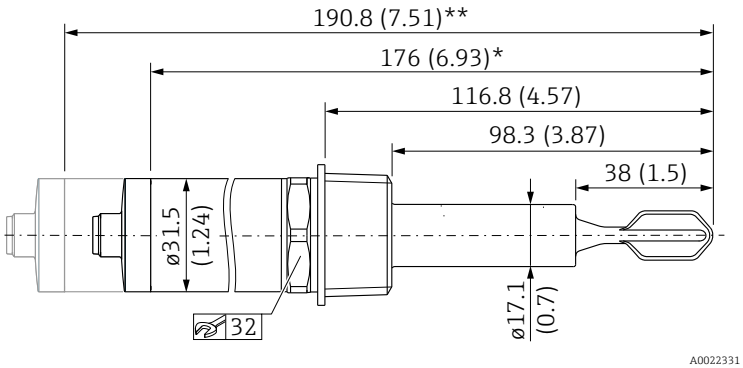 *22 Short tube version, example MNPT 1"*		

Pay attention to the temperature and pressure specifications for seals used at the customer site.

Endress+Hauser supplies DIN/EN process connections with threaded connection in stainless steel in accordance with AISI 316L (DIN/EN material number 1.4404 or 1.4435). With regard to their stability-temperature property, the materials 1.4404 and 1.4435 are grouped together under 13E0 in EN 1092-1, Tab. 18. The chemical composition of the two materials can be identical.

Weight

Sensor type	Weight
Compact version with process adapter G ½" and valve plug for process temperature up to 100 °C (212 °F)	Approx. 140 g (4.938 oz)
Short tube version with process adapter G ½" and valve plug for process temperature up to 150 °C (302 °F)	Approx. 169 g (5.961 oz)

Materials

Material specifications in accordance with AISI and DIN EN.

Materials in contact with process

Component part	Material
Tuning fork	316L
Process adapter	316L (1.4404/1.4435)
Short tube	316L (1.4404/1.4435)
Seal for weld-in adapter with G ¾", G 1"	VMQ
Flat seal	FA (composite material based on aramid fibers combined with NBR)

Materials not in contact with process

Component part	Material
Housing cover with M12 plug (IP66/68/69)	316L (1.4404/1.4435)
Housing cover with M12 plug (IP65/67)	PPSU
Housing cover with valve plug (IP65)	
Housing cover with cable (IP66/68)	
Cable gland	PVDF
Design ring	PBT/PC
Housing	316L (1.4404/1.4435)

Surface roughness

Metallic surface in contact with process:

Ra ≤3.2 µm (126 µin)

The surface is not defined in the area of the welding seam.

Operability

LED display

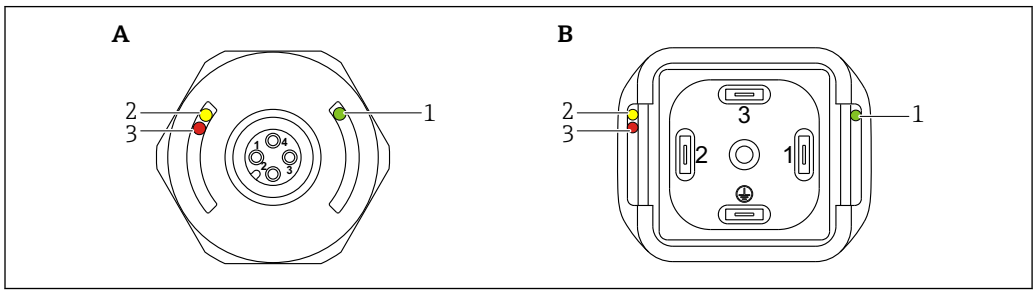

A M12 plug, (cable without graphic)
B Valve plug

Item	Function	Description
1	Green LED (gn) Lit	Device is operational
2	Yellow LED (ye) Lit	**M12 plug** Indicates the sensor state: tuning fork is covered by liquid **Valve plug / cable** Indicates the switching state: ▪ MAX operating mode (overfill protection): sensor is **not** covered by liquid ▪ MIN operating mode (dry running protection): the sensor is covered by liquid
3	Red LED (rd) Flashing Lit	Warning/maintenance required: Fault can be remedied, e.g. incorrect wiring; protective function if test magnet is held against the sensor for longer than 30 s Fault/device failure: error cannot be rectified, e.g. electronic error

On the metal housing cover (IP69), there is no external signaling via LEDs. A connecting cable with an M12 plug and LED display can be optionally ordered as an accessory. See the "Accessories" section

Function test with test magnet

Carry out a function test while the device is in operation.

▶ Hold the test magnet for at least 2 s against the marking on the housing.
↳ This inverts the current switch status, and the yellow LED changes state. When the magnet is removed, the switching status valid at that time is adopted.

If the test magnet is held against the marking for longer than 30 s, the red LED will flash: The device returns automatically to the current switch status.

The test magnet is not included in the scope of delivery. It can optionally be ordered as an accessory. See the "Accessories" -> "Additional accessories" section

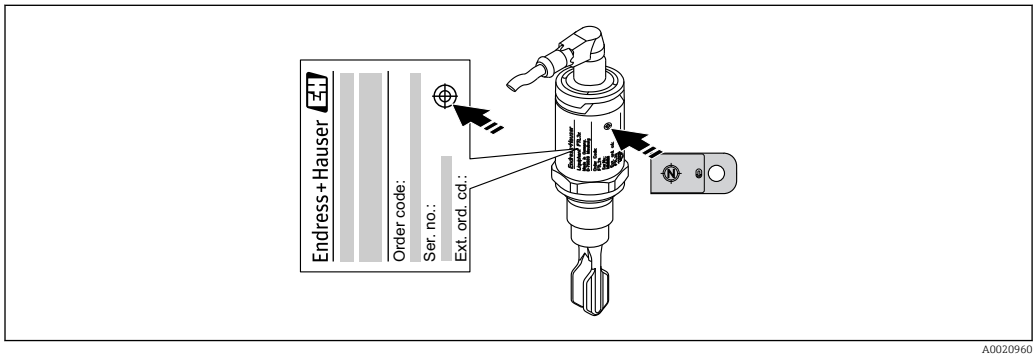

23 Position for test magnet on housing

Certificates and approvals

The following documents are also available in the Download Area of the Endress+Hauser website:www.endress.com → Downloads.

CE mark

The measuring system complies with the statutory requirements of the applicable EC Directives. These are listed in the corresponding EC Declaration of Conformity together with the standards applied. Endress+Hauser confirms successful testing of the device by affixing to it the CE mark.

EAC conformity

The measuring system meets the legal requirements of the applicable EAC guidelines. These are listed in the corresponding EAC Declaration of Conformity together with the standards applied.

Endress+Hauser confirms successful testing of the device by affixing to it the EAC mark.

RCM-Tick marking

The supplied product or measuring system meets the ACMA (Australian Communications and Media Authority) requirements for network integrity, interoperability, performance characteristics as well as health and safety regulations. Here, especially the regulatory arrangements for electromagnetic compatibility are met. The products are labelled with the RCM- Tick marking on the name plate.



A0029561

Approval

CSA C/US General Purpose

Overfill protection

Prior to mounting the device, pay attention to the WHG approval documents. The documents are available on the Endress+Hauser website: www.endress.com → Downloads.

WHG

- Overfill detection system: Z-65.11-531
- Leak detection system: Z-65.40-532

Marine approvals

- GL (Germanischer Lloyd)/ DNV (Det Norske Veritas)
- ABS (American Bureau of Shipping)
- LR (Lloyd's Register)
- BV (Bureau Veritas)

CRN approval

Versions with a CRN approval (Canadian Registration Number) are listed in the corresponding registration documents. CRN-approved devices are labeled with registration number 0F16950.5C on the nameplate. For further details on the maximum pressure values, see the Download Area of the Endress+Hauser website.

Inspection certificates

The following documents can be ordered with the device (optional):

- Acceptance test certificate as per EN 10204-3.1
- Final inspection report

Manufacturer declaration

The following manufacturer declarations can be ordered (optional):

- FDA conformity
- TSE-free, materials free from animal origin
- ROHS-compliant in accordance with Endress+Hauser regulation

Pressure Equipment Directive

The device does not fall within the scope of Pressure Equipment Directive 97/23/EC as it does not have a pressurized housing as defined in Article 1, Section 2.1.4 of the directive.

Other standards and guidelines

The applicable European guidelines and standards can be found in the relevant EU Declarations of Conformity.

Ordering information

Ordering information

Detailed ordering information is available from your nearest sales organization www.addresses.endress.com or in the Product Configurator under www.endress.com .

Product Configurator - the tool for individual product configuration
- Up-to-the-minute configuration data
- Depending on the device: Direct input of measuring point-specific information such as measuring range or operating language
- Automatic verification of exclusion criteria
- Automatic creation of the order code and its breakdown in PDF or Excel output format
- Ability to order directly in the Endress+Hauser Online Shop

Services (optional)

In addition, the following services can be selected via the product structure in the Product Configurator:

- Cleaned of oil+grease
- PWIS-free (PWIS = paint-wetting impairment substances)
- Density setting > 0.5 g/cm^3
- Switching delay setting

Accessories

Weld-in adapter

Various weld-in adapters are available for installation in vessels or pipes.

The adapters are optionally available with inspection certificate 3.1 EN10204.

View (example)	Description
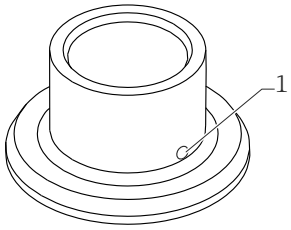 *1 Leakage hole*	**G ¾"** ø29 pipe installation ø50 vessel installation FDA-listed materials as per 21 CFR Part 175-178
	G 1" ø53 pipe installation ø60 vessel installation

If installed horizontally and weld-in adapters with a leakage hole are used, ensure that the leakage hole is pointing down. This allows leaks to be detected as quickly as possible.

For detailed information, see "Technical Information" TI00426F (Weld-in adapters, process adapters and flanges)

Available in the Download Area of the Endress+Hauser website (www.endress.com/downloads).

Plug-in jack, cable

The plug-in jacks listed are suitable for use in the temperature range −25 to +70 °C (−13 to +158 °F).

Engineering unit mm (in)

Plug-in jack M12 IP69 with LED	Description	Order number
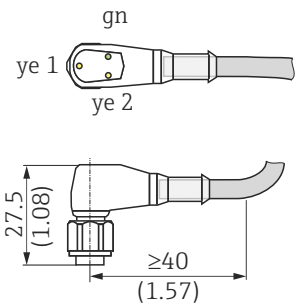	▪ Elbowed 90° ▪ Terminated at one end ▪ 5 m (16 ft) PVC cable (orange) ▪ Slotted nut 316L ▪ Body: PVC (transparent)	52018763

Plug-in jack M12 IP69	Description	Order number
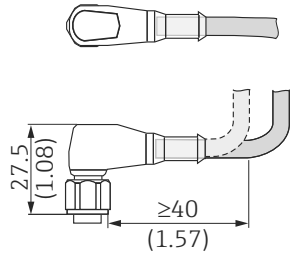	▪ Terminated at one end ▪ Elbowed 90° ▪ 5 m (16 ft)PVC cable (orange) ▪ Slotted nut 316L (1.4435) ▪ Body: PVC (orange)	52024216

Plug-in jack M12 IP67	Description	Order number
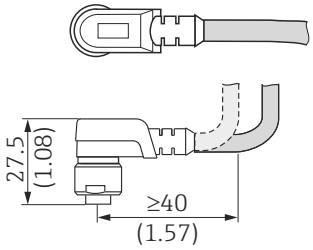	▪ Elbowed 90° ▪ 5 m (16 ft) PVC cable (gray) ▪ Slotted nut Cu Sn/Ni ▪ Body: PUR (black)	52010285

Wire colors for M12 plug: 1 = BN (brown), 2 = WT (white), 3 = BU (blue), 4 = BK (black)

Plug-in jack M12 IP67	Description	Order number
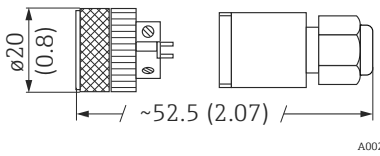	▪ Self-terminated connection to M12 plug ▪ Slotted nut Cu Sn/Ni ▪ Body: PBT	52006263

Additional accessories

Socket wrench for mounting	Description	Order number
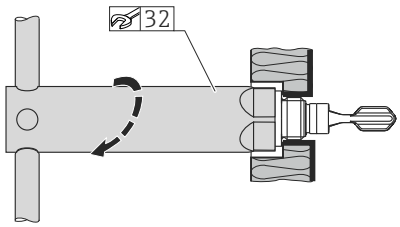 A0022273	▪ Hexagonal ▪ Size across flats AF32	52010156

Test magnet	Description	Order number
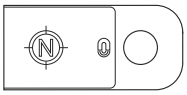 A0021732	Information in the "Operation" section → 🖹 28	71267011

Supplementary documentation

For an overview of the scope of the associated Technical Documentation, refer to the following:
- *W@M Device Viewer* (www.endress.com/deviceviewer): Enter the serial number from nameplate
- *Endress+Hauser Operations App*: Enter the serial number from the nameplate or scan the 2D matrix code (QR code) on the nameplate

Operating Instructions Liquiphant FTL31

BA01285F

Additional documentation

Weld-in adapters, process adapters and flanges (overview)

TI00426F

Weld-in adapter (installation instructions)

SD01622Z

Valve plug (installation instructions)

SD00356F

Certificates

Overfill protection

ZE01010F

Leak

ZE01011F



www.addresses.endress.com

Endress+Hauser

People for Process Automation