CD04

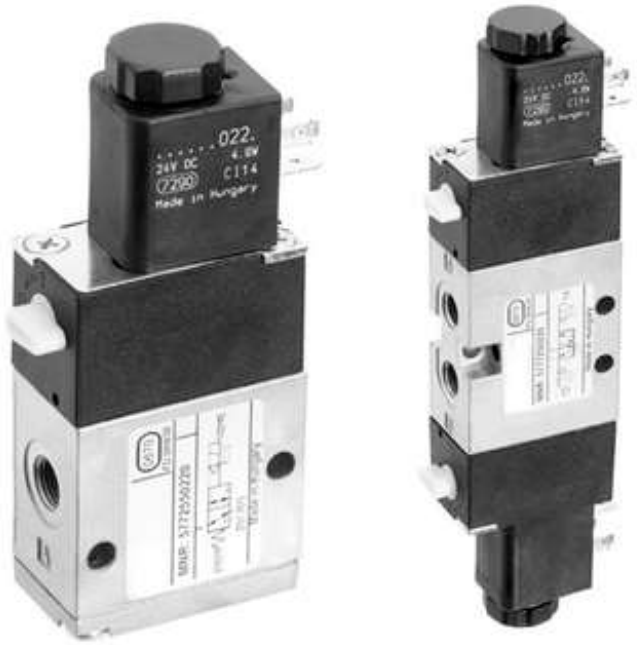

AVENTICS™

AVENTICS Series CD04
Directional valves

EMERSON™

Series CD04

The AVENTICS Series CD consists of various spool valves with an extremely durable die-cast zinc housing. Its electrical, pneumatic, or mechanical actuating controls (roller, lever, pedal, or plunger) make the Series CD ideal for applications in harsh environments.

- Durable design
- Assembly on base plate
- Suitable for extreme ambient temperatures
- Resistant to voltage fluctuations
- Check compatibility index to match coil on valve.



Product overview

Page

Electrically operated

3/2-directional valve, Series CD04, single solenoid..... 6
Basic valve without coil - G 1/8 - -15 °C cold-resistant - Plug - 3/2, with spring return - NC NO

3/2-directional valve, Series CD04, single solenoid..... 7
M10x1 - -15 °C cold-resistant - Plug - 3/2, with spring return - NC NO

3/2-directional valve, Series CD04, single solenoid..... 9
G 1/8 - -15 °C cold-resistant - Plug - 3/2, with spring return - NC NO

5/2-directional valve, Series CD04, single solenoid..... 11
M10x1 - -15 °C cold-resistant - Plug - 5/2, with spring return

5/2-directional valve, Series CD04, single solenoid..... 13
G 1/8 - -15 °C cold-resistant - Plug

5/2-directional valve, Series CD04, double solenoid..... 16
M10x1 - -15 °C cold-resistant - Plug - 5/2, double solenoid

5/2-directional valve, Series CD04, double solenoid..... 18
G 1/8 - -15 °C cold-resistant - Plug - 5/2, double solenoid

5/3-directional valve, Series CD04..... 20
G 1/8 - -15 °C cold-resistant - Plug

Electrically operated, imperial

3/2-directional valve, Series CD04, single solenoid..... 22
1/8-27 NPTF - -15 °C cold-resistant - Plug - NC NO

5/2-directional valve, Series CD04, single solenoid..... 24
1/8-27 NPTF - -15 °C cold-resistant - Plug

5/2-directional valve, Series CD04, double solenoid..... 26
1/8-27 NPTF - -15 °C cold-resistant - Plug

5/3-directional valve, Series CD04..... 28
1/8-27 NPTF - -15 °C cold-resistant - Plug

Pneumatically operated

3/2-directional valve, Series CD04, Single Air Pilot..... 31
M10x1 - 3/2, with spring return - NC

3/2-directional valve, Series CD04, Single Air Pilot..... 32
G 1/8 - -15 °C cold-resistant - 3/2, with spring return - NC

5/2-directional valve, Series CD04, Single Air Pilot..... 33
M10x1 - -15 °C cold-resistant - 5/2, with spring return

5/2-directional valve, Series CD04, Single Air Pilot..... 34
G 1/8 - -15 °C cold-resistant - 5/2, with spring return

5/2-directional valve, Series CD04, Double Air Pilot..... 35
M10x1 - -15 °C cold-resistant - 5/2, double solenoid

5/2-directional valve, Series CD04, Double Air Pilot..... 36
G 1/8 - -15 °C cold-resistant - 5/2, double solenoid

Pneumatically operated, imperial

3/2-directional valve, Series CD04, Single Air Pilot..... 37
NC

5/2-directional valve, Series CD04, Single Air Pilot..... 38

5/2-directional valve, Series CD04, Double Air Pilot..... 39
-15 °C cold-resistant - 5/2, double solenoid

Mechanically operated

Product overview

Page

3/2-directional valve, Series CD04, Plunger 40
Single Solenoid - Soft seal - 3/2, with spring return - NC NO
3/2-directional valve, Series CD04, Roller 41
Single Solenoid - Soft seal - 3/2, with spring return - NC NO
3/2-directional valve, Series CD04, Hand lever 43
Single Solenoid - Soft seal - 3/2, with spring return - NC NO
3/2-directional valve, Series CD04, Hand lever, with detent, without detent 45
Single Solenoid - Soft seal - 3/2, with spring return - NC NO
3/2-directional valve, Series CD04, Rotary lever, with detent 47
Single Solenoid - Soft seal - 3/2, with spring return - NC NO
3/2-directional valve, Series CD04, Button 49
Single Solenoid - Soft seal - 3/2, with spring return - NC NO
5/2-directional valve, Series CD04, Plunger 51
Single Solenoid - Soft seal - 5/2, with spring return
5/2-directional valve, Series CD04, Roller 52
Single Solenoid - Soft seal - 5/2, with spring return
5/2-directional valve, Series CD04, Hand lever, with detent 54
Single Solenoid - Soft seal - 5/2, with spring return
5/2-directional valve, Series CD04, Hand lever 56
Single Solenoid - Soft seal - 5/2, with spring return
5/2-directional valve, Series CD04, Rotary lever, with detent 58
Single Solenoid - Soft seal - 5/2, with spring return
5/2-directional valve, Series CD04, Button 60
Single Solenoid - Soft seal - 5/2, with spring return

Mechanically operated, imperial

3/2-directional valve, Series CD04, Plunger 62
Double Solenoid - Soft seal - NC NO
5/2-directional valve, Series CD04, Plunger 69
Double Solenoid - Soft seal

Accessories overview Electrical accessories

Valve plug connector, series CON-VP, Form B, 24 V AC/DC 76
Valve plug connector, series CON-VPP, Form B, 115/230 V AC/DC, LED 78
Valve plug connector, series CON-VP, Form B, industry, 300 V DC / 250 V AC 80
Valve plug connector with cable series CON-VP, Form B, 0° female insert 82
Z-diode - 24 V AC/DC
Valve plug connector with cable series CON-VP,, 180° female insert 84
Z-diode - 24 V AC/DC
Coil, Series CO2, form B, class F, polyamide 86
Plug

Accessories overview Mechanical accessories

R, P, S subbase, Series CD04 88
Manifold strip, Series CD04 89
Mounting kit, CD04 series 91
Blanking plate 92
Blanking screw, gasket 93
Blanking screw, gasket, M5 94

Accessories overview Silencer

Silencers, series SI1, Sintered bronze 95

Product overview

Page

Silencers, series SI1, Sintered bronze..... 96
Silencers, series SI1, Sintered bronze..... 99
Silencers, series SI1, Polyethylene..... 101

3/2-directional valve, Series CD04, single solenoid



Flow: 900 l/min
Pilot valve width: 26 mm
Activation: Electrically
Actuating control: Double Solenoid
Manual override: with detent
Coil width: 22 mm
Electrical connection 2, thread size: EN 175301-803, form B
Qn 1 > 2: 900 l/min
Compressed air connection type: Internal thread
Electrical connection 2, number of poles: 3-pin
Compressed air connection input: G 1/8
Compressed air connection output: G 1/8
Compressed air connection, exhaust: G 1/8
Min. control pressure: 3 bar
Max. control pressure: 10 bar
Pilot valve width: 26 mm
Duty cycle: 100 %
Type: Spool valve, positive overlapping
Ambient temperature min./max.: -15 °C ... 50 °C
Medium temperature min./max.: -15 °C ... 15 °C
Working pressure min./max.: 10 bar

	Function	Pilot	Manual override	Compatibility index	Min. ambient temperature [°C]	Max. ambient temperature [°C]	Basic valve equipment	Part No.
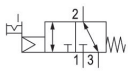	NC, NO	Internal	with detent	44	-15	50	Basic valve without coil	5772555402
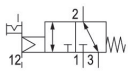	NC, NO	External	with detent	44	-15	50	Basic valve without coil	5772565402

Dimensions in mm

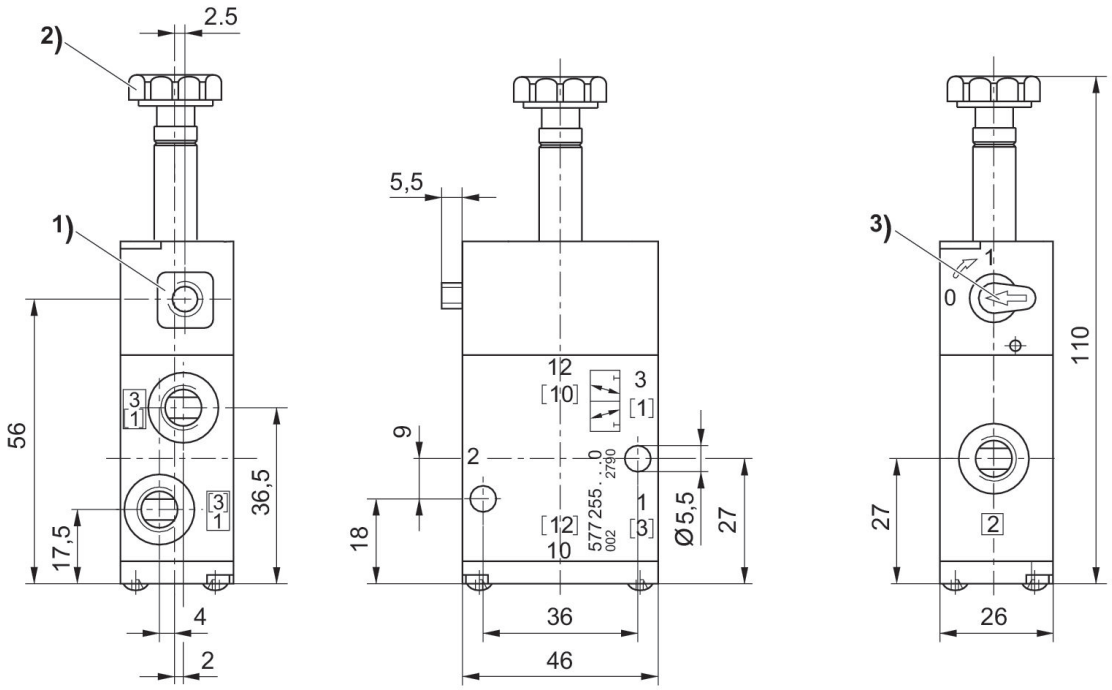

1) Only with separate pilot control G 1/8
2) After removal of cap M 5 internal thread
3) Manual override

3/2-directional valve, Series CD04, single solenoid



Flow: 900 l/min
Pilot valve width: 26 mm
Activation: Electrically
Manual override: with detent
Coil width: 22 mm
Electrical connection 2, thread size: EN 175301-803, form B
Qn 1 > 2: 900 l/min
Compressed air connection type: Internal thread
Electrical connection 2, number of poles: 3-pin
Compressed air connection input: M10x1
Compressed air connection output: M10x1
Compressed air connection, exhaust: M10x1
Min. control pressure: 3 bar
Max. control pressure: 10 bar
Pilot valve width: 26 mm
Duty cycle: 100 %
Type: Spool valve, positive overlapping
Ambient temperature min./max.: -15 °C ... 50 °C
Medium temperature min./max.: -15 °C ... 50 °C
Working pressure min./max.: 3 bar ... 10 bar

	Operational voltage	Function	Pilot	Manual override	Compatibility index	Min. ambient temperature [°C]	Max. ambient temperature [°C]	Part No.
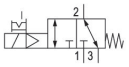	24 V DC	NC, NO	Internal	with detent	44	-15	50	5772500220
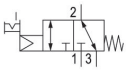		NC, NO	Internal	with detent	44	-15	50	5772505402

Basic valve equipment	Part No.
	5772500220
Basic valve without coil	5772505402

Dimensions

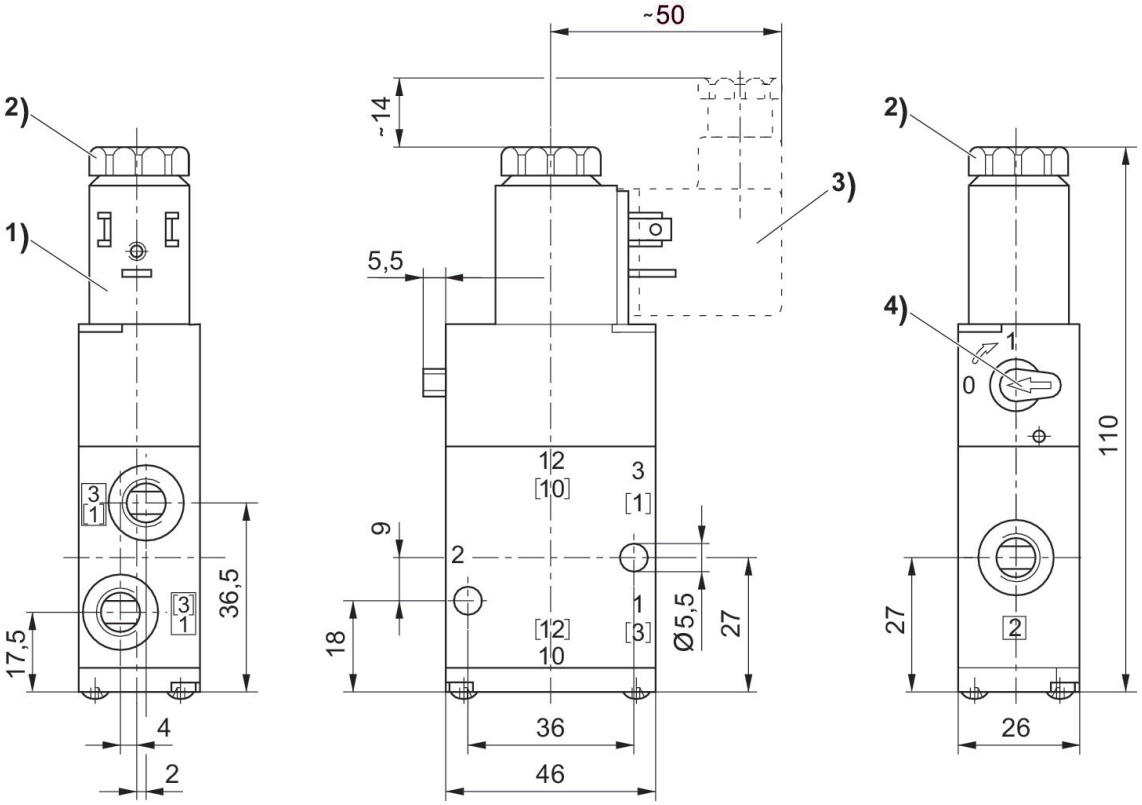

1) Coil can be rotated at 90° intervals
2) After removal of cap M5 internal thread
3) Valve plug connector can be plugged at 180° intervals
4) Manual override

3/2-directional valve, Series CD04, single solenoid

Flow: 900 l/min
Pilot valve width: 26 mm
Activation: Electrically
Actuating control: Double Solenoid
Manual override: with detent
Coil width: 22 mm
Electrical connection 2, thread size: EN 175301-803, form B
Qn 1 > 2: 900 l/min
Compressed air connection type: Internal thread
Electrical connection 2, number of poles: 3-pin
Compressed air connection input: G 1/8
Compressed air connection output: G 1/8
Compressed air connection, exhaust: G 1/8
Min. control pressure: 3 bar
Max. control pressure: 10 bar
Pilot valve width: 26 mm
Duty cycle: 100 %
Type: Spool valve, positive overlapping
Working pressure min./max.: 10 bar



	Operational voltage	Operational voltage AC at 50 Hz	Operational voltage AC at 60 Hz	Function	Pilot	Manual override	Compatibility index	Part No.
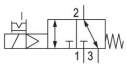	24 V DC			NC, NO	Internal	with detent	44	5772550220
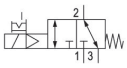		110 V	110 V	NC, NO	Internal	with detent	44	5772555270
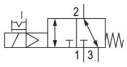		230 V	230 V	NC, NO	Internal	with detent	44	5772555280
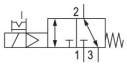		24 V	24 V	NC, NO	Internal	with detent	44	5772555220
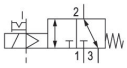	24 V DC			NC, NO	External	with detent	44	5772560220
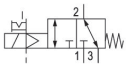		110 V	110 V	NC, NO	External	with detent	44	5772565270
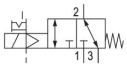		230 V	230 V	NC, NO	External	with detent	44	5772565280
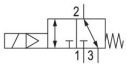	24 V DC			NC, NO	Internal	without	44	5772590220

Min. ambient temperature [°C]	Max. ambient temperature [°C]	Part No.
-15	50	5772550220
-15	50	5772555270
-15	50	5772555280
-15	50	5772555220
-15	50	5772560220

Min. ambient temperature [°C]	Max. ambient temperature [°C]	Part No.
-15	50	5772565270
-15	50	5772565280
-20	80	5772590220

Dimensions

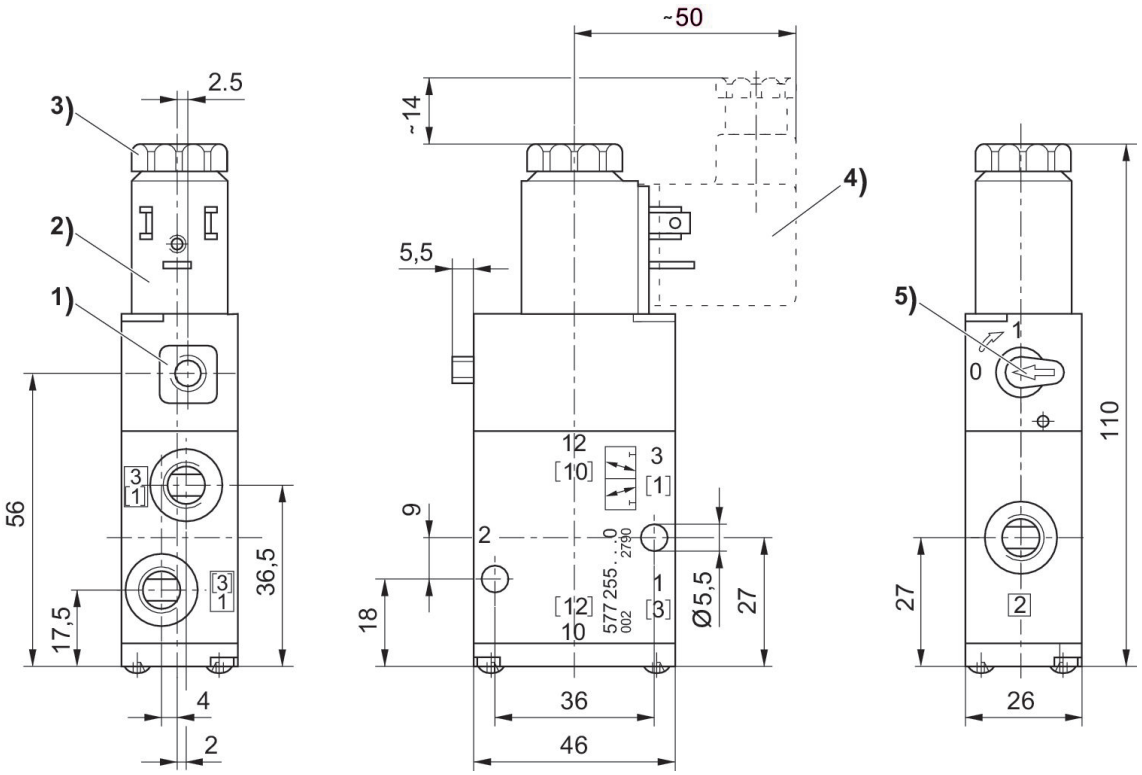

1) Only with separate pilot control G 1/8
2) Coil can be rotated at 90° intervals
3) After removal of cap M5 internal thread
4) Valve plug connector can be plugged at 180° intervals
5) Manual override

5/2-directional valve, Series CD04, single solenoid



Flow: 900 l/min
Pilot valve width: 26 mm
Activation: Electrically
Manual override: with detent
Coil width: 22 mm
Electrical connection 2, thread size: EN 175301-803, form B
Qn 1 > 2: 900 l/min
Compressed air connection type: Internal thread
Electrical connection 2, number of poles: 3-pin
Compressed air connection input: M10x1
Compressed air connection output: M10x1
Compressed air connection, exhaust: M10x1
Min. control pressure: 3 bar
Max. control pressure: 10 bar
Pilot valve width: 26 mm
Duty cycle: 100 %
Type: Spool valve, positive overlapping
Ambient temperature min./max.: -15 °C ... 50 °C
Medium temperature min./max.: -15 °C ... 50 °C
Working pressure min./max.: 3 bar ... 10 bar

	Operational voltage	Operational voltage AC at 50 Hz	Operational voltage AC at 60 Hz	Pilot	Manual override	Compatibility index	Min. ambient temperature [°C]	Part No.
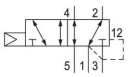				Internal	with detent	44	-15	5777005402
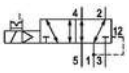	24 V DC			Internal	with detent	44	-15	5777000220
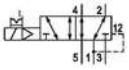		230 V	230 V	Internal	with detent	44	-15	5777005280

Max. ambient temperature [°C]	Basic valve equipment	Part No.
50	Basic valve without coil	5777005402
50		5777000220
50		5777005280

Dimensions

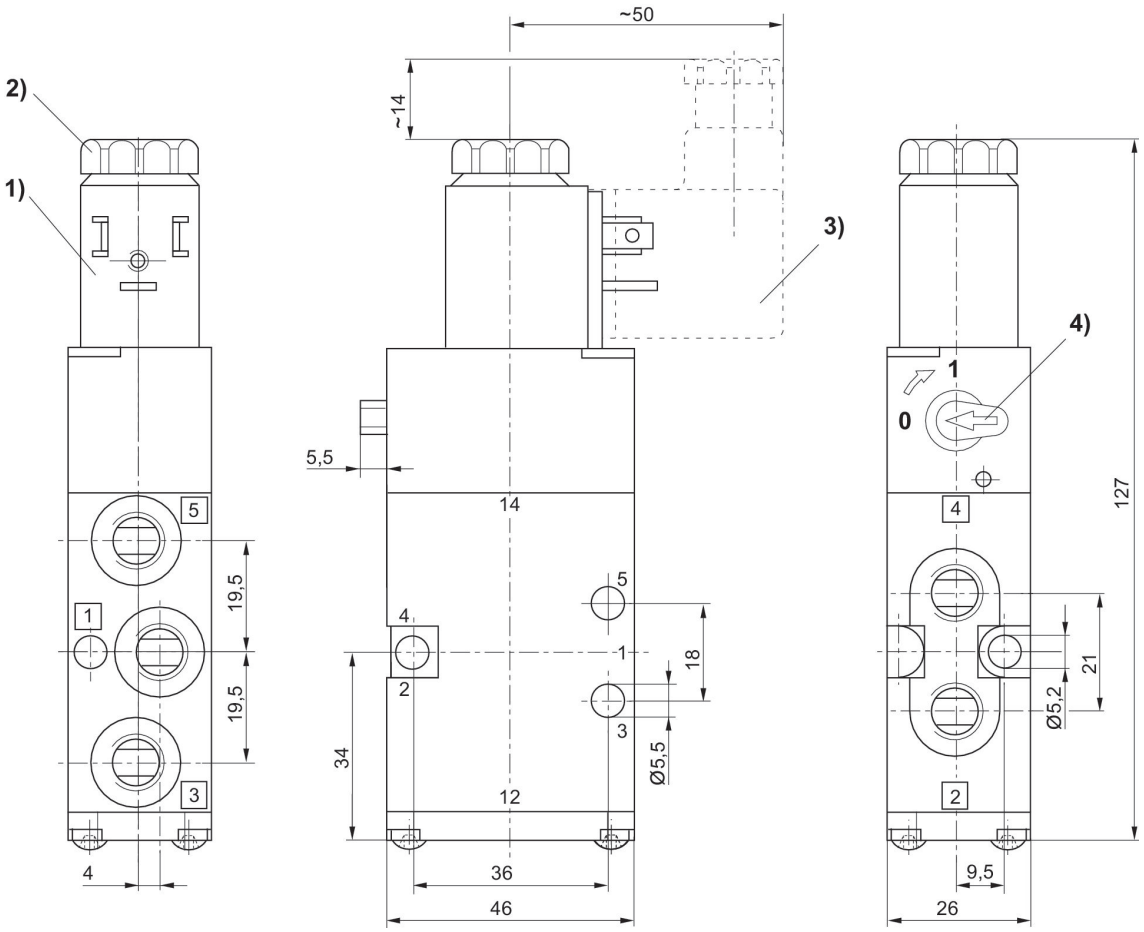

1) Coil can be rotated at 90° intervals
2) After removal of cap M5 internal thread
3) Valve plug connector can be plugged at 180° intervals
4) Manual override

5/2-directional valve, Series CD04, single solenoid



Flow: 900 l/min
Pilot valve width: 26 mm
Activation: Electrically
Actuating control: Double Solenoid
Manual override: with detent
Coil width: 22 mm
Electrical connection 2, thread size: EN 175301-803, form B
Qn 1 > 2: 900 l/min
Compressed air connection type: Internal thread
Electrical connection 2, number of poles: 3-pin
Compressed air connection input: G 1/8
Compressed air connection output: G 1/8
Compressed air connection, exhaust: G 1/8
Min. control pressure: 3 bar
Max. control pressure: 10 bar
Pilot valve width: 26 mm
Duty cycle: 100 %
Type: Spool valve, positive overlapping
Ambient temperature min./max.: -15 °C ... 50 °C
Medium temperature min./max.: -15 °C ... 50 °C
Working pressure min./max.: 10 bar

	Operational voltage	Operational voltage AC at 50 Hz	Operational voltage AC at 60 Hz	Pilot	Manual override	Compatibil-ity index	Min. ambient temperature [°C]	Part No.
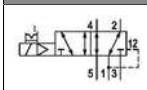	12 V DC			Internal	with detent	44	-15	5777050210
	24 V DC			Internal	with detent	44	-15	5777050220
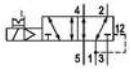		110 V	110 V	Internal	with detent	44	-15	5777055270
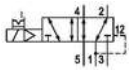		230 V	230 V	Internal	with detent	44	-15	5777055280
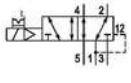	24 V AC	24 V	24 V	Internal	with detent	44	-15	5777055220
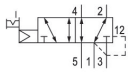				Internal	with detent	44	-15	5777055402
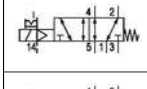	24 V DC			External	with detent	44	-15	5777060220
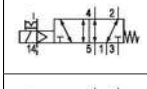		110 V	110 V	External	with detent	44	-15	5777065270
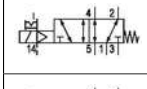		230 V	230 V	External	with detent	44	-15	5777065280
	24 V AC	24 V	24 V	External	with detent	44	-15	5777065220
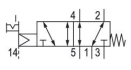				External	with detent	44	-15	5777065402
	24 V DC			Internal	with detent	44	-15	5777150220

	Operational voltage	Operational voltage AC at 50 Hz	Operational voltage AC at 60 Hz	Pilot	Manual override	Compatibility index	Min. ambient temperature [°C]	Part No.
		110 V	110 V	Internal	with detent	44	-15	5777155270

Max. ambient temperature [°C]	Basic valve equipment	Part No.
50		5777050210
50		5777050220
50		5777055270
50		5777055280
50		5777055220
50	Basic valve without coil	5777055402
50		5777060220
50		5777065270
50		5777065280
50		5777065220
50	Basic valve without coil	5777065402
50		5777150220
50		5777155270

Dimensions

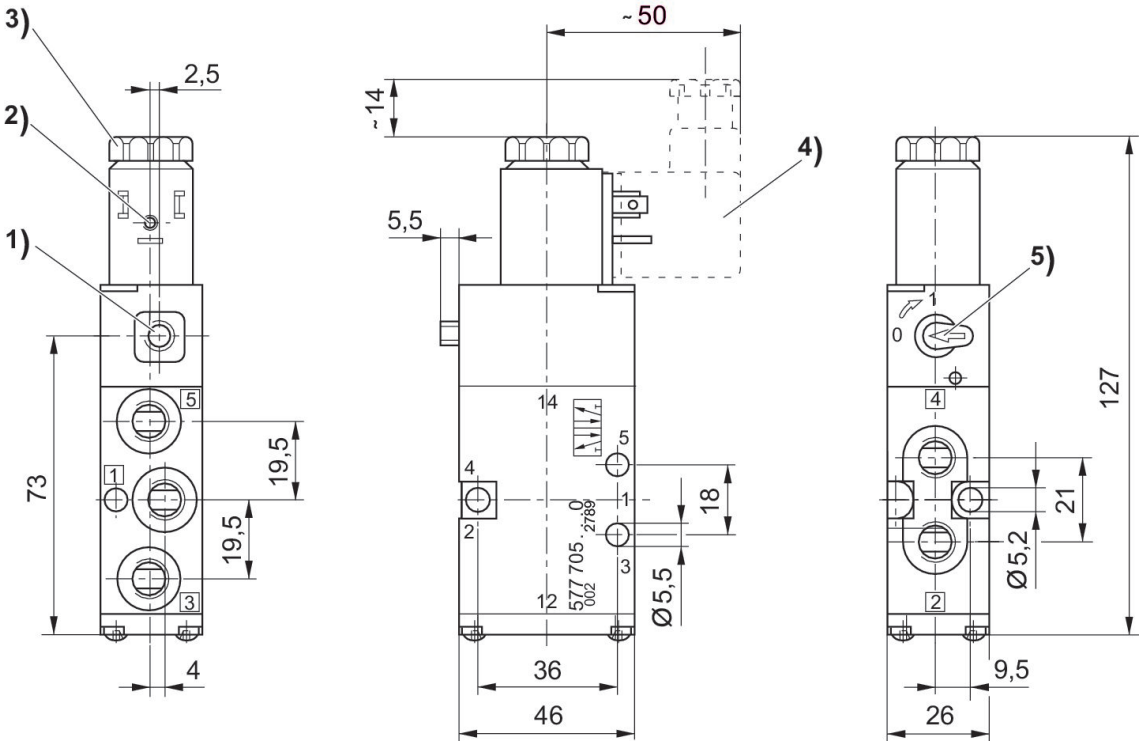

1) Only with separate pilot control G 1/8
2) Coil can be rotated at 90° intervals
3) After removal of cap M5 internal thread
4) Valve plug connector can be plugged at 180° intervals
5) Manual override

5/2-directional valve, Series CD04, double solenoid



Flow: 900 l/min
Pilot valve width: 26 mm
Activation: Electrically
Actuating control: Double Solenoid
Manual override: with detent
Coil width: 22 mm
Electrical connection 2, thread size: EN 175301-803, form B
Qn 1 > 2: 900 l/min
Compressed air connection type: Internal thread
Electrical connection 2, number of poles: 3-pin
Compressed air connection input: M10x1
Compressed air connection output: M10x1
Compressed air connection, exhaust: M10x1
Min. control pressure: 2 bar
Max. control pressure: 10 bar
Pilot valve width: 26 mm
Duty cycle: 100 %
Type: Spool valve, positive overlapping
Ambient temperature min./max.: -15 °C ... 50 °C
Medium temperature min./max.: -15 °C ... 50 °C
Working pressure min./max.: 2 bar ... 10 bar

	Operational voltage	Operational voltage AC at 50 Hz	Operational voltage AC at 60 Hz	Pilot	Manual override	Compatibility index	Min. ambient temperature [°C]	Part No.
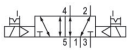	24 V DC			Internal	with detent	44	-15	5777200220
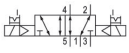		230 V	230 V	Internal	with detent	44	-15	5777205280
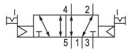				Internal	with detent	44	-15	5777205402

Max. ambient temperature [°C]	Basic valve equipment	Part No.
50		5777200220
50		5777205280
50	Basic valve without coil	5777205402

Dimensions

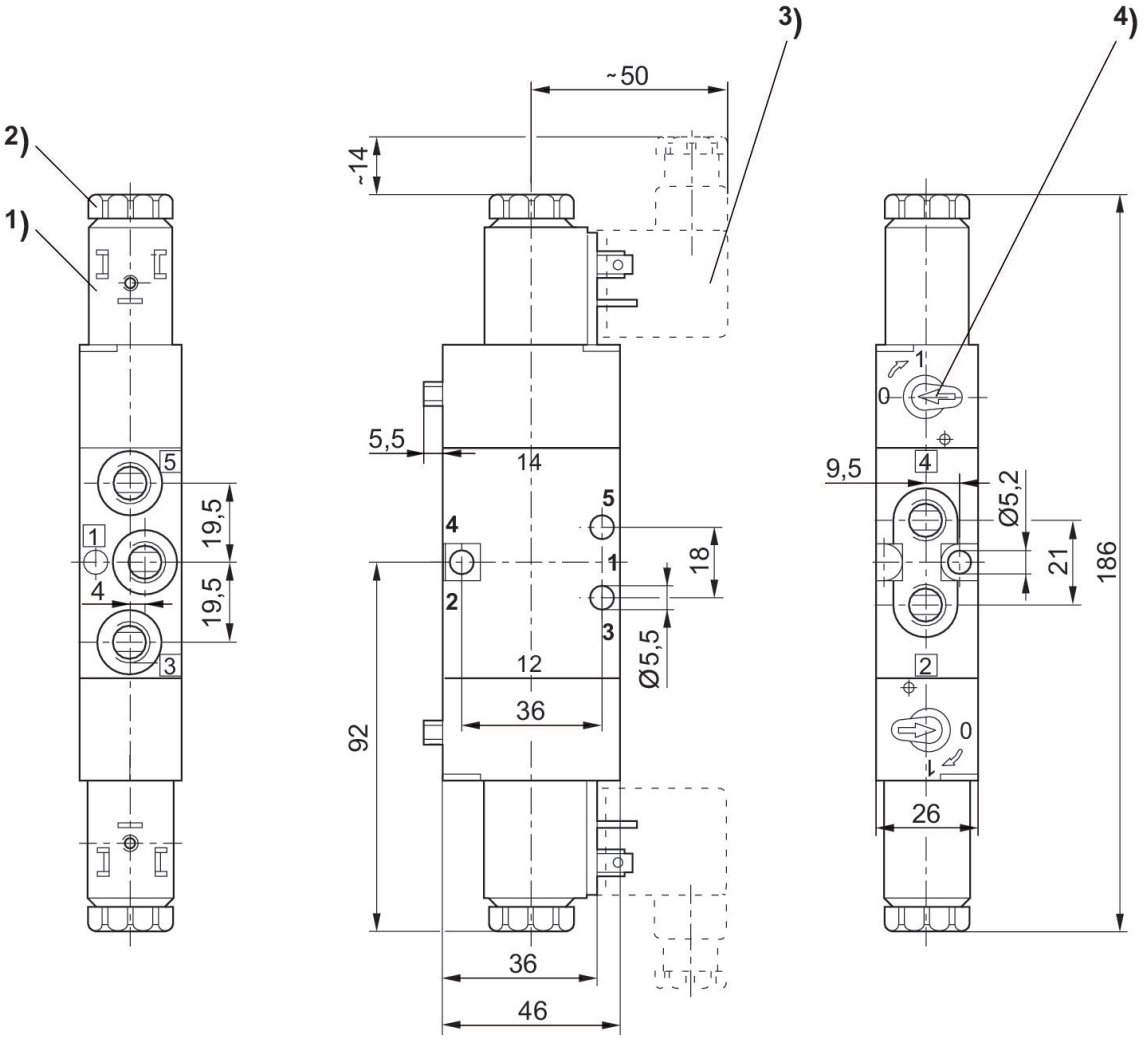

1) Coil can be rotated at 90° intervals
2) After removal of cap M5 internal thread
3) Valve plug connector can be plugged at 180° intervals
4) Manual override

5/2-directional valve, Series CD04, double solenoid



Flow: 900 l/min
Pilot valve width: 26 mm
Activation: Electrically
Actuating control: Double Solenoid
Manual override: with detent
Coil width: 22 mm
Electrical connection 2, thread size: EN 175301-803, form B
Qn 1 > 2: 900 l/min
Compressed air connection type: Internal thread
Electrical connection 2, number of poles: 3-pin
Compressed air connection input: G 1/8
Compressed air connection output: G 1/8
Compressed air connection, exhaust: G 1/8
Min. control pressure: 2 bar
Max. control pressure: 10 bar
Pilot valve width: 26 mm
Duty cycle: 100 %
Type: Spool valve, positive overlapping
Ambient temperature min./max.: -15 °C ... 50 °C
Medium temperature min./max.: -15 °C ... 50 °C
Working pressure min./max.: 10 bar

	Operational voltage	Operational voltage AC at 50 Hz	Operational voltage AC at 60 Hz	Pilot	Manual override	Compatibility index	Min. ambient temperature [°C]	Part No.
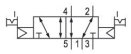				Internal	with detent	44	-15	5777255402
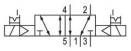	12 V DC			Internal	with detent	44	-15	R412008841
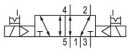	24 V DC			Internal	with detent	44	-15	5777250220
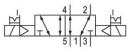		230 V	230 V	Internal	with detent	44	-15	5777255280
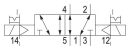	24 V DC			External	with detent	44	-15	5777260220
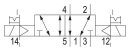		230 V	230 V	External	with detent	44	-15	5777265280
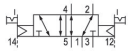				External	with detent	44	-15	5777265402

Max. ambient temperature [°C]	Basic valve equipment	Part No.
50	Basic valve without coil	5777255402
50		R412008841
50		5777250220
50		5777255280
50		5777260220
50		5777265280
50	Basic valve without coil	5777265402

Dimensions

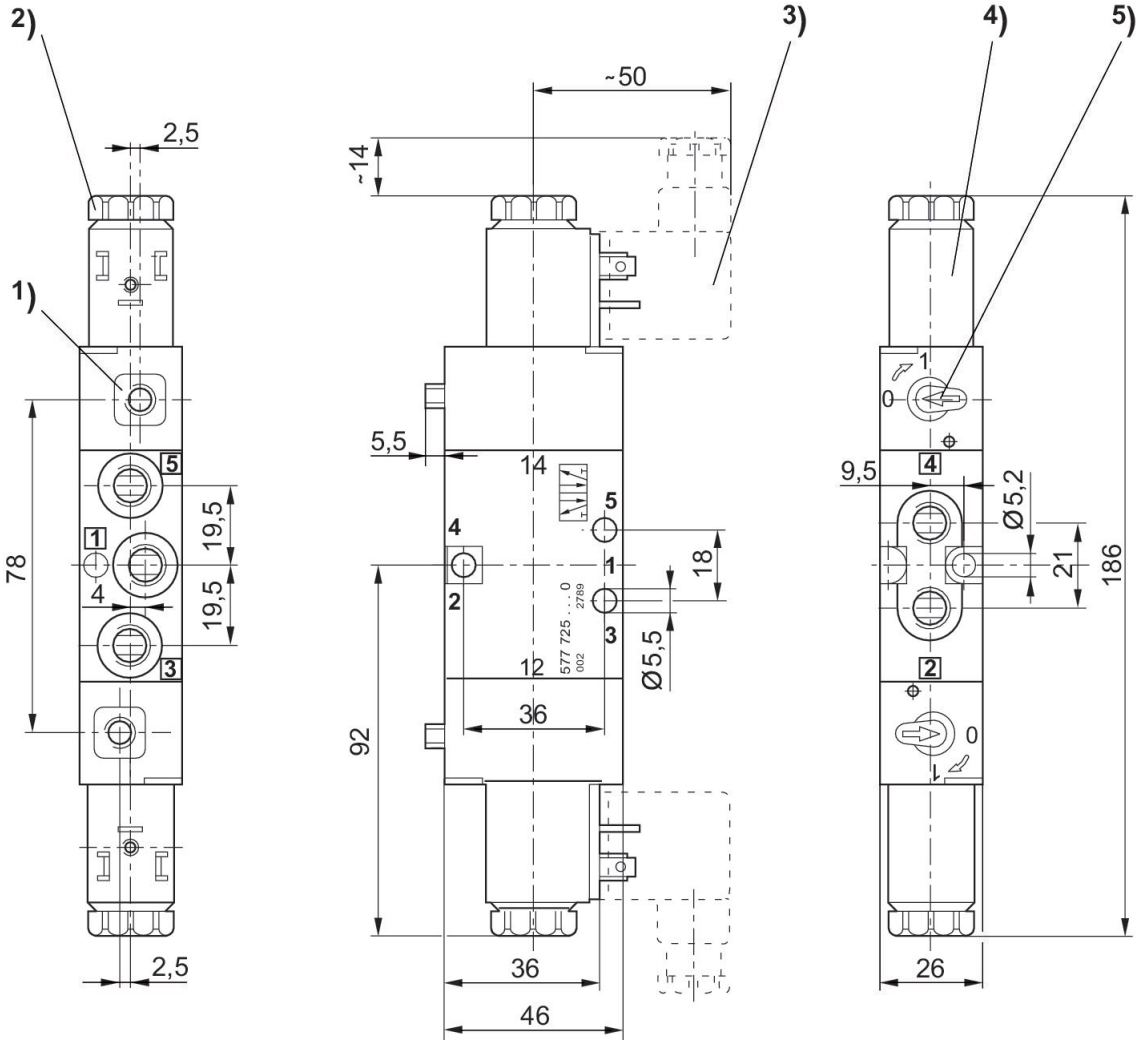

1) Only with separate pilot control G 1/8
2) After removal of cap M5 internal thread
3) Valve plug connector can be plugged at 180° intervals
4) Coil can be rotated at 90° intervals
5) Manual override

5/3-directional valve, Series CD04



Flow: 900 l/min
Pilot valve width: 26 mm
Activation: Electrically
Actuating control: Double Solenoid
Manual override: with detent
Coil width: 22 mm
Electrical connection 2, thread size: EN 175301-803, form B
Qn 1 > 2: 900 l/min
Compressed air connection type: Internal thread
Electrical connection 2, number of poles: 3-pin
Compressed air connection input: G 1/8
Compressed air connection output: G 1/8
Compressed air connection, exhaust: G 1/8
Min. control pressure: 3.5 bar
Max. control pressure: 10 bar
Pilot valve width: 26 mm
Duty cycle: 100 %
Type: Spool valve, positive overlapping
Ambient temperature min./max.: -15 °C ... 50 °C
Medium temperature min./max.: -15 °C ... 50 °C
Working pressure min./max.: 3.5 bar ... 10 bar

	Operational voltage	Operational voltage AC at 50 Hz	Operational voltage AC at 60 Hz	Function	Pilot	Manual override	Compatibility index	Part No.
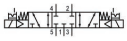	24 V DC			Closed Center	Internal	with detent	44	5777420220
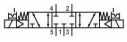		230 V	230 V	Closed Center	Internal	with detent	44	5777425280
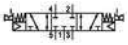				Closed Center	Internal	with detent	44	5777425402
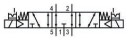	24 V DC			Exhausted Center	Internal	with detent	44	5777410220
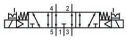		230 V	230 V	Exhausted Center	Internal	with detent	44	5777415280
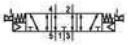				Exhausted Center	Internal	with detent	44	5777415402
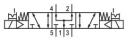	24 V DC			Pressurized Center	Internal	with detent	44	5777400220
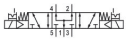		230 V	230 V	Pressurized Center	Internal	with detent	44	5777405280
				Pressurized Center	Internal	with detent	44	5777405402

Min. ambient temperature [°C]	Max. ambient temperature [°C]	Basic valve equipment	Part No.
-15	50		5777420220
-15	50		5777425280
-15	50	Basic valve without coil	5777425402
-15	50		5777410220
-15	50		5777415280
-15	50	Basic valve without coil	5777415402

Min. ambient temperature [°C]	Max. ambient temperature [°C]	Basic valve equipment	Part No.
-15	50		5777400220
-15	50		5777405280
-15	50	Basic valve without coil	5777405402

Dimensions

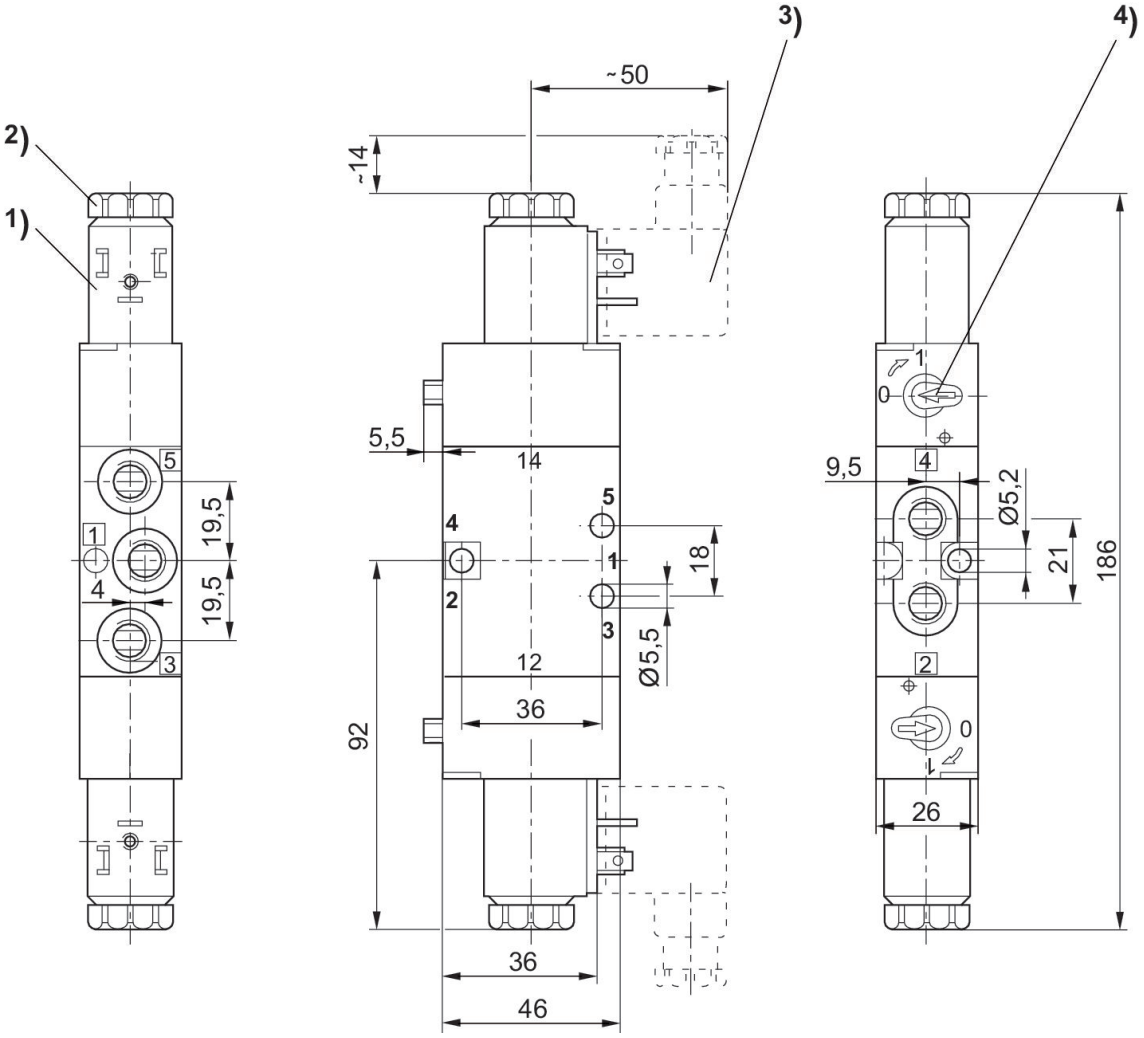

1) Coil can be rotated at 90° intervals
2) After removal of cap M5 internal thread
3) Valve plug connector can be plugged at 180° intervals
4) Manual override

3/2-directional valve, Series CD04, single solenoid



Flow: 900 l/min
Pilot valve width: 26 mm
Activation: Electrically
Manual override: with detent
Coil width: 22 mm
Electrical connection 2, thread size: EN 175301-803, form B
Qn 1 > 2: 900 l/min
Compressed air connection type: Internal thread
Electrical connection 2, number of poles: 3-pin
Compressed air connection input: 1/8-27 NPTF
Compressed air connection output: 1/8-27 NPTF
Compressed air connection, exhaust: 1/8-27 NPTF
Min. control pressure: 3 bar
Max. control pressure: 10 bar
Pilot valve width: 26 mm
Duty cycle: 100 %
Type: Spool valve, positive overlapping
Ambient temperature min./max.: -15 °C ... 50 °C
Medium temperature min./max.: -15 °C ... 50 °C
Working pressure min./max.: 3 bar ... 10 bar

	Operational voltage	Operational voltage AC at 50 Hz	Operational voltage AC at 60 Hz	Function	Pilot	Manual override	Compatibility index	Part No.
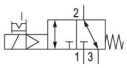	12 V DC			NC, NO	Internal	with detent	44	R412012695
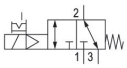	24 V DC			NC, NO	Internal	with detent	44	R412012696
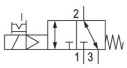		110 V	110 V	NC, NO	Internal	with detent	44	R412012698
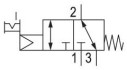				NC, NO	Internal	with detent	44	R412088229

Min. ambient temperature [°C]	Max. ambient temperature [°C]	Basic valve equipment	Part No.
-15	50		R412012695
-15	50		R412012696
-15	50		R412012698
-15	50	Basic valve without coil	R412088229

Dimensions in inches

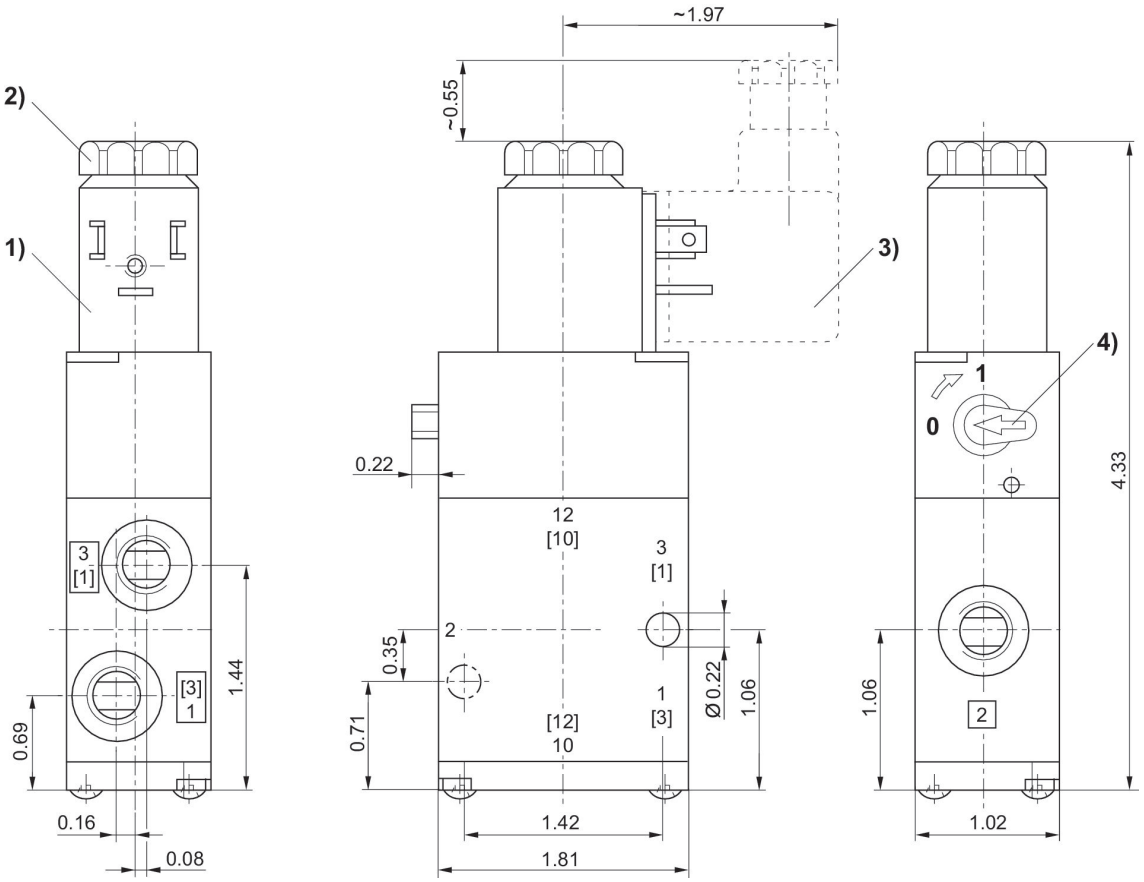

1) Coil can be rotated at 90° intervals
2) After removal of cap M5 internal thread
3) Valve plug connector can be plugged at 180° intervals
4) Manual override

5/2-directional valve, Series CD04, single solenoid



Flow: 900 l/min
Pilot valve width: 26 mm
Activation: Electrically
Actuating control: Double Solenoid
Manual override: with detent
Coil width: 22 mm
Electrical connection 2, thread size: EN 175301-803, form B
Qn 1 > 2: 900 l/min
Compressed air connection type: Internal thread
Electrical connection 2, number of poles: 3-pin
Compressed air connection input: 1/8-27 NPTF
Compressed air connection output: 1/8-27 NPTF
Compressed air connection, exhaust: 1/8-27 NPTF
Min. control pressure: 3 bar
Max. control pressure: 10 bar
Pilot valve width: 26 mm
Duty cycle: 100 %
Type: Spool valve, positive overlapping
Ambient temperature min./max.: -15 °C ... 50 °C
Medium temperature min./max.: -15 °C ... 50 °C
Working pressure min./max.: 3 bar ... 10 bar

	Operational voltage	Operational voltage AC at 50 Hz	Operational voltage AC at 60 Hz	Pilot	Manual override	Compatibility index	Min. ambient temperature [°C]	Part No.
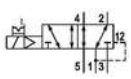	12 V DC			Internal	with detent	44	-15	R412012840
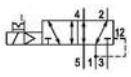	24 V DC			Internal	with detent	44	-15	R412012841
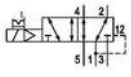		110 V	110 V	Internal	with detent	44	-15	R412012842
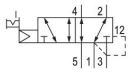				Internal	with detent	44	-15	R412088231
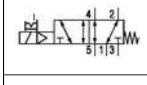	12 V DC			Internal	with detent	44	-15	R412012708
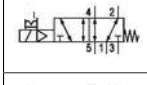	24 V DC			Internal	with detent	44	-15	R412012709
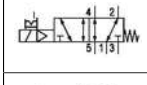		110 V	110 V	Internal	with detent	44	-15	R412012711
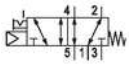				Internal	with detent	44	-15	R412088230

Max. ambient temperature [°C]	Basic valve equipment	Part No.
50		R412012840
50		R412012841
50		R412012842
50	Basic valve without coil	R412088231
50		R412012708

Max. ambient temperature [°C]	Basic valve equipment	Part No.
50		R412012709
50		R412012711
50	Basic valve without coil	R412088230

Dimensions in inches

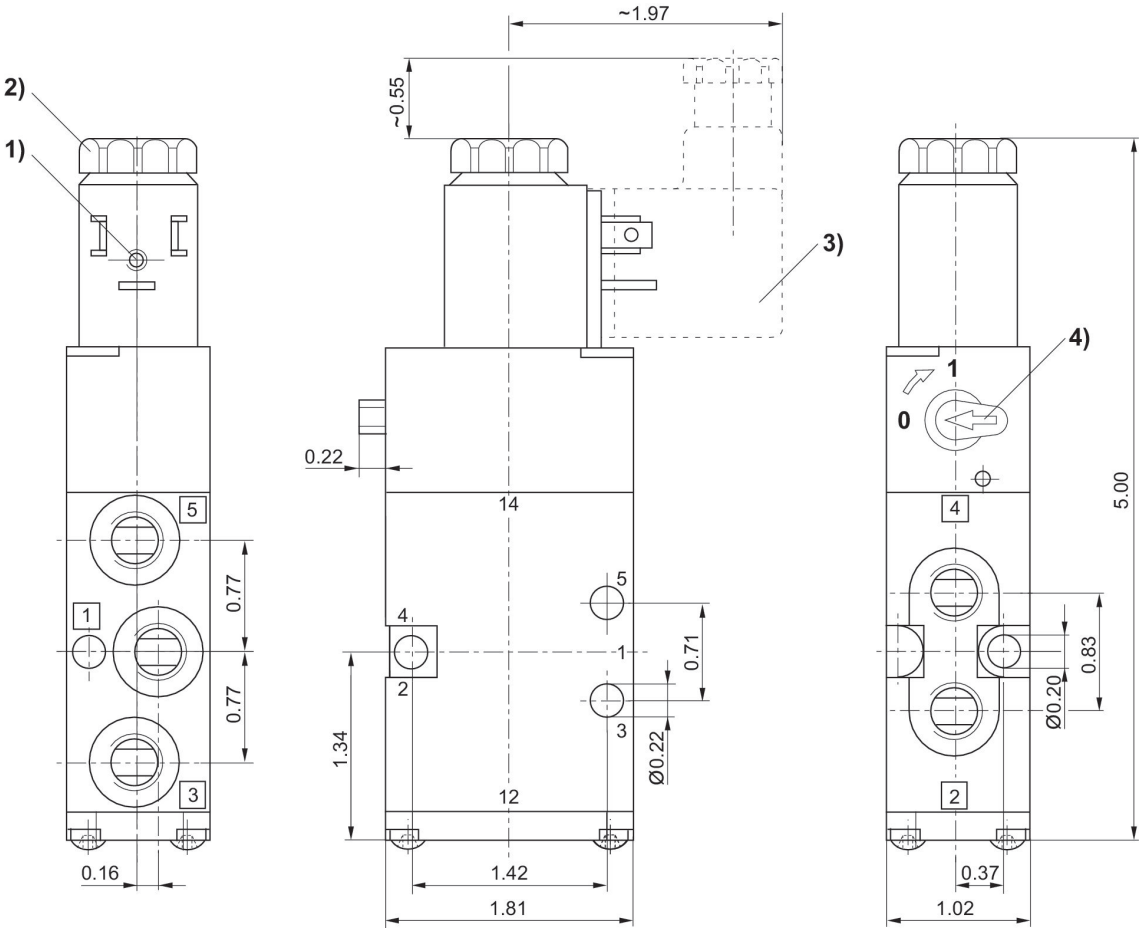

1) Coil can be rotated at 90° intervals
2) After removal of cap M5 internal thread
3) Valve plug connector can be plugged at 180° intervals
4) Manual override

5/2-directional valve, Series CD04, double solenoid

Flow: 900 l/min
Pilot valve width: 26 mm
Activation: Electrically
Actuating control: Double Solenoid
Manual override: with detent
Coil width: 22 mm
Electrical connection 2, thread size: EN 175301-803, form B
Qn 1 > 2: 900 l/min
Compressed air connection type: Internal thread
Electrical connection 2, number of poles: 3-pin
Compressed air connection input: 1/8-27 NPTF
Compressed air connection output: 1/8-27 NPTF
Compressed air connection, exhaust: 1/8-27 NPTF
Min. control pressure: 2 bar
Max. control pressure: 10 bar
Pilot valve width: 26 mm
Duty cycle: 100 %
Type: Spool valve, positive overlapping
Ambient temperature min./max.: -15 °C ... 50 °C
Medium temperature min./max.: -15 °C ... 50 °C
Working pressure min./max.: 2 bar ... 10 bar



	Operational voltage	Operational voltage AC at 50 Hz	Operational voltage AC at 60 Hz	Pilot	Manual override	Compatibility index	Min. ambient temperature [°C]	Part No.
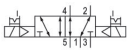	12 V DC			Internal	with detent	44	-15	R412012999
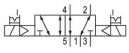	24 V DC			Internal	with detent	44	-15	R412013000
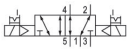		110 V	110 V	Internal	with detent	44	-15	R412013001
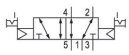				Internal	with detent	44	-15	R412088236

Max. ambient temperature [°C]	Basic valve equipment	Part No.
50		R412012999
50		R412013000
50		R412013001
50	Basic valve without coil	R412088236

Dimensions in inches

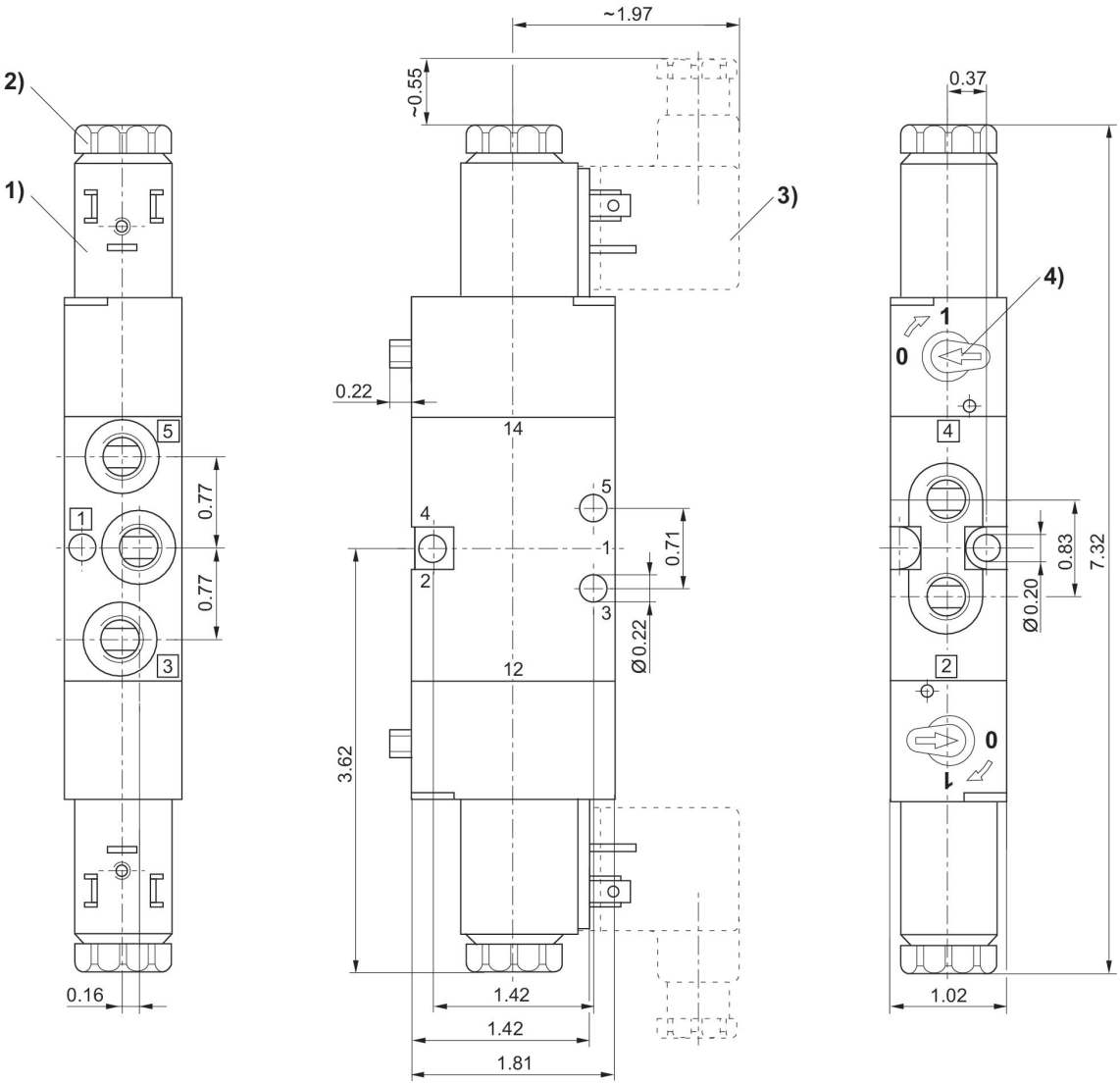

1) Coil can be rotated at 90° intervals
2) After removal of cap M5 internal thread
3) Valve plug connector can be plugged at 180° intervals
4) Manual override

5/3-directional valve, Series CD04

Flow: 900 l/min
Pilot valve width: 26 mm
Activation: Electrically
Manual override: with detent
Coil width: 22 mm
Electrical connection 2, thread size: EN 175301-803, form B
Qn 1 > 2: 900 l/min
Compressed air connection type: Internal thread
Electrical connection 2, number of poles: 3-pin
Compressed air connection input: 1/8-27 NPTF
Compressed air connection output: 1/8-27 NPTF
Compressed air connection, exhaust: 1/8-27 NPTF
Min. control pressure: 3.5 bar
Max. control pressure: 10 bar
Pilot valve width: 26 mm
Duty cycle: 100 %
Type: Spool valve, positive overlapping
Ambient temperature min./max.: -15 °C ... 50 °C
Medium temperature min./max.: -15 °C ... 50 °C
Working pressure min./max.: 3.5 bar ... 10 bar



	Operational voltage	Operational voltage AC at 50 Hz	Operational voltage AC at 60 Hz	Pilot	Manual override	Compatibility index	Min. ambient temperature [°C]	Part No.
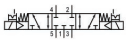	12 V DC			Internal	with detent	44	-15	R412013018
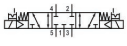	24 V DC			Internal	with detent	44	-15	R412013019
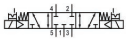		110 V	110 V	Internal	with detent	44	-15	R412013020
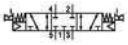				Internal	with detent	44	-15	R412088233
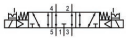	12 V DC			Internal	with detent	44	-15	R412013015
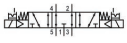	24 V DC			Internal	with detent	44	-15	R412013016
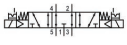		110 V	110 V	Internal	with detent	44	-15	R412013017
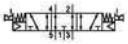				Internal	with detent	44	-15	R412088235
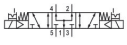	12 V DC			Internal	with detent	44	-15	R412013011
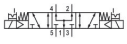	24 V DC			Internal	with detent	44	-15	R412013012
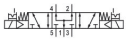		110 V	110 V	Internal	with detent	44	-15	R412013014
				Internal	with detent	44	-15	R412088234

Max. ambient temperature [°C]	Basic valve equipment	Part No.
50		R412013018
50		R412013019
50		R412013020

Max. ambient temperature [°C]	Basic valve equipment	Part No.
50	Basic valve without coil	R412088233
50		R412013015
50		R412013016
50		R412013017
50	Basic valve without coil	R412088235
50		R412013011
50		R412013012
50		R412013014
50	Basic valve without coil	R412088234

Dimensions in inches

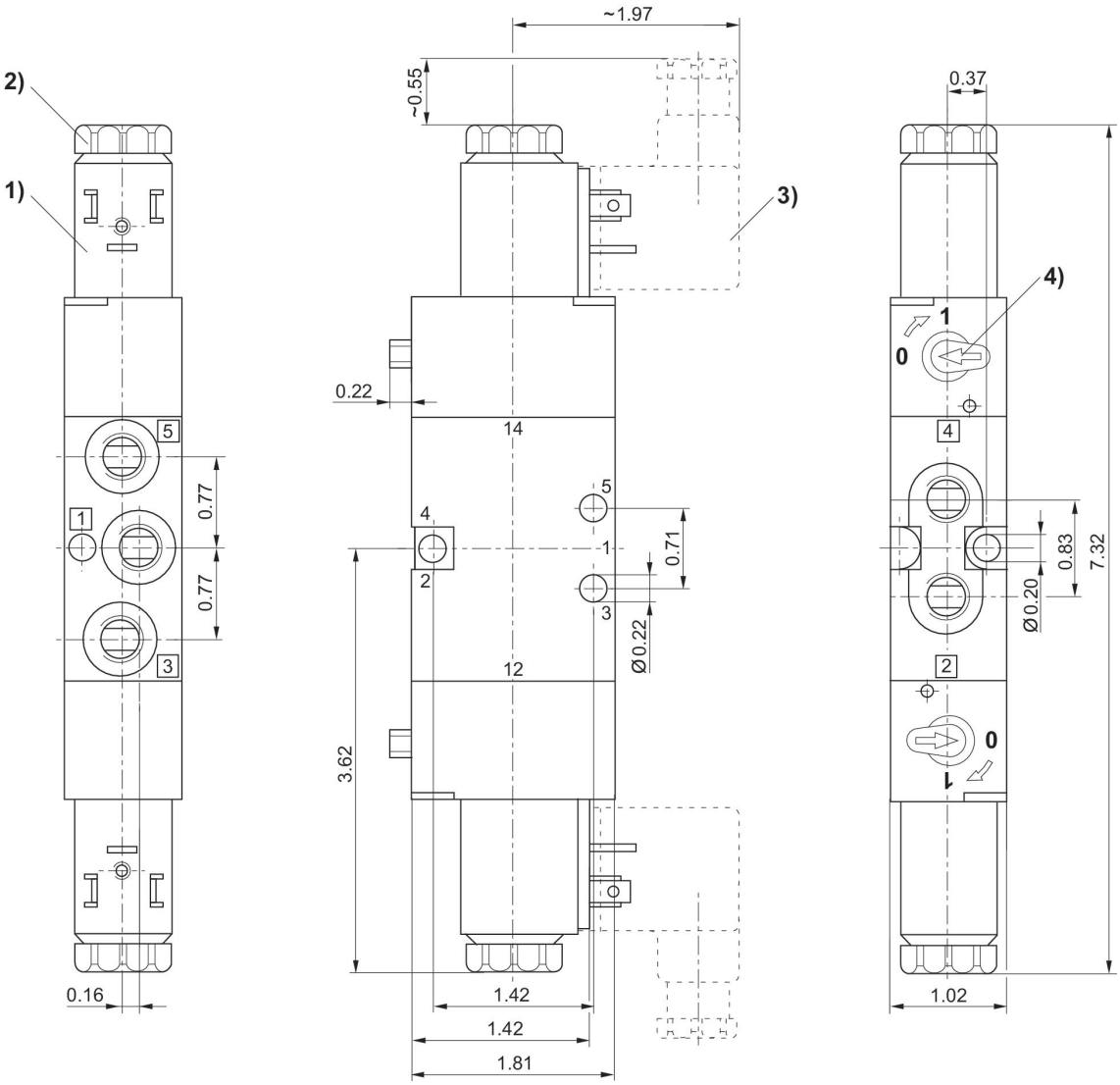

1) Coil can be rotated at 90° intervals
2) After removal of cap M5 internal thread
3) Valve plug connector can be plugged at 180° intervals
4) Manual override

3/2-directional valve, Series CD04, Single Air Pilot

Flow: 900 l/min
Activation: Pneumatically
Actuating control: Single Air Pilot
Compressed air connection type: Internal thread
Compressed air connection input: M10x1
Compressed air connection output: M10x1
Compressed air connection, exhaust: M10x1
Min. control pressure: 3.5 bar
Max. control pressure: 10 bar
Type: Spool valve, positive overlapping
Ambient temperature min./max.: -15 °C ... 65 °C
Medium temperature min./max.: -15 °C ... 65 °C
Working pressure min./max.: -0.95 bar ... 10 bar



	Function	Min. ambient temperature [°C]	Max. ambient temperature [°C]	Part No.
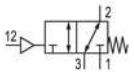	NC/NO	-15	65	R412005941

Dimensions in mm

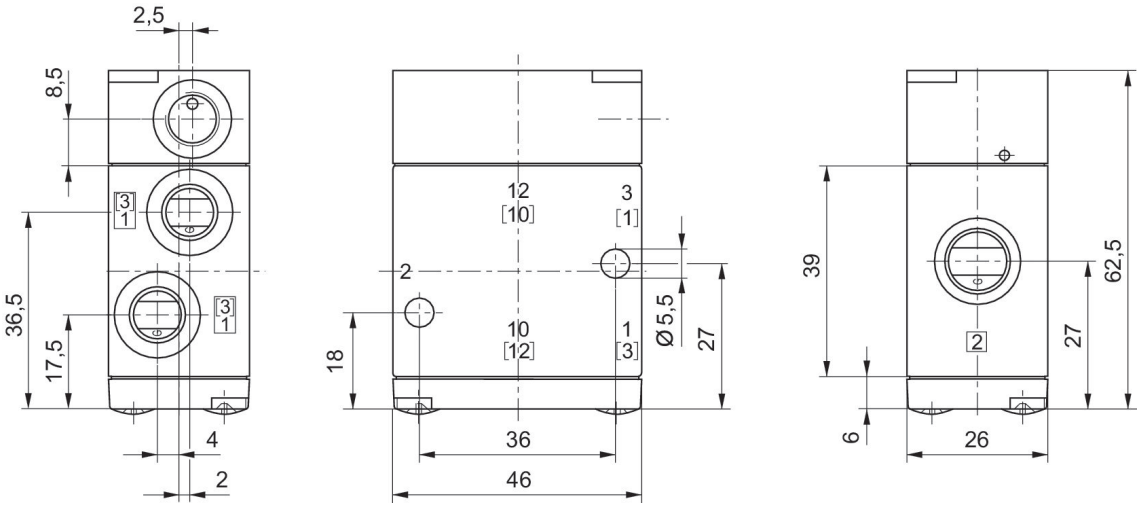

3/2-directional valve, Series CD04, Single Air Pilot

Flow: 900 l/min
Activation: Pneumatically
Actuating control: Single Air Pilot
Qn 1 > 2: 900 l/min
Compressed air connection type: Internal thread
Compressed air connection input: G 1/8
Compressed air connection output: G 1/8
Compressed air connection, exhaust: G 1/8
Min. control pressure: 3.5 bar
Max. control pressure: 10 bar
Type: Spool valve, positive overlapping
Ambient temperature min./max.: -15 °C ... 65 °C
Medium temperature min./max.: -15 °C ... 65 °C
Working pressure min./max.: -0.95 bar ... 10 bar



	Function	Min. ambient temperature [°C]	Max. ambient temperature [°C]	Part No.
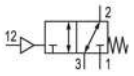	NC/NO	-15	65	5710200100

Dimensions in mm

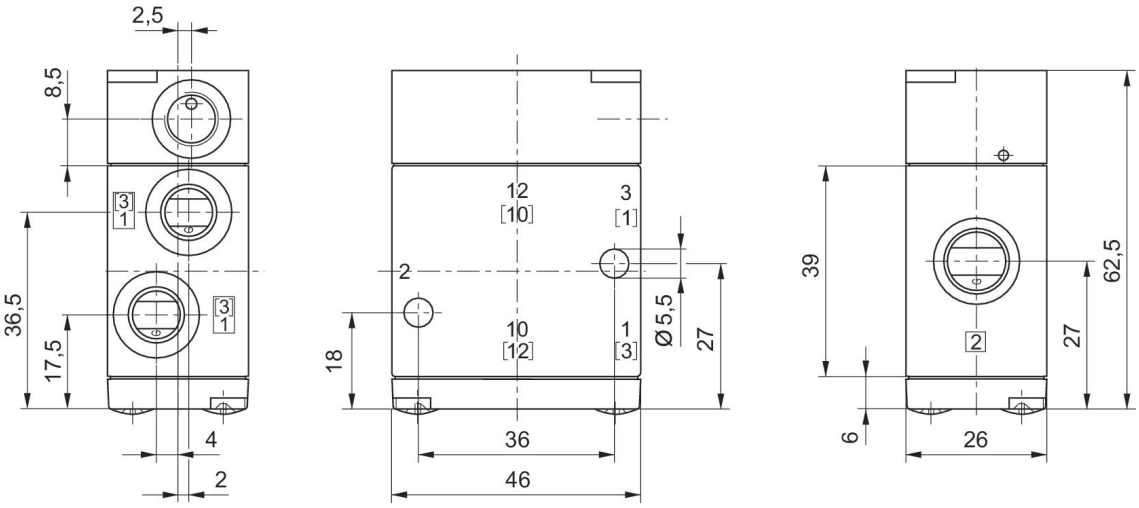

5/2-directional valve, Series CD04, Single Air Pilot

Flow: 900 l/min
Activation: Pneumatically
Actuating control: Single Air Pilot
Compressed air connection type: Internal thread
Compressed air connection input: M10x1
Compressed air connection output: M10x1
Compressed air connection, exhaust: M10x1
Min. control pressure: 3.5 bar
Max. control pressure: 10 bar
Type: Spool valve, positive overlapping
Ambient temperature min./max.: -15 °C ... 65 °C
Medium temperature min./max.: -15 °C ... 65 °C
Working pressure min./max.: -0.95 bar ... 10 bar



	Min. ambient temperature [°C]	Max. ambient temperature [°C]	Part No.
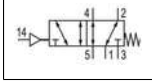	-15	65	R412012543

Dimensions

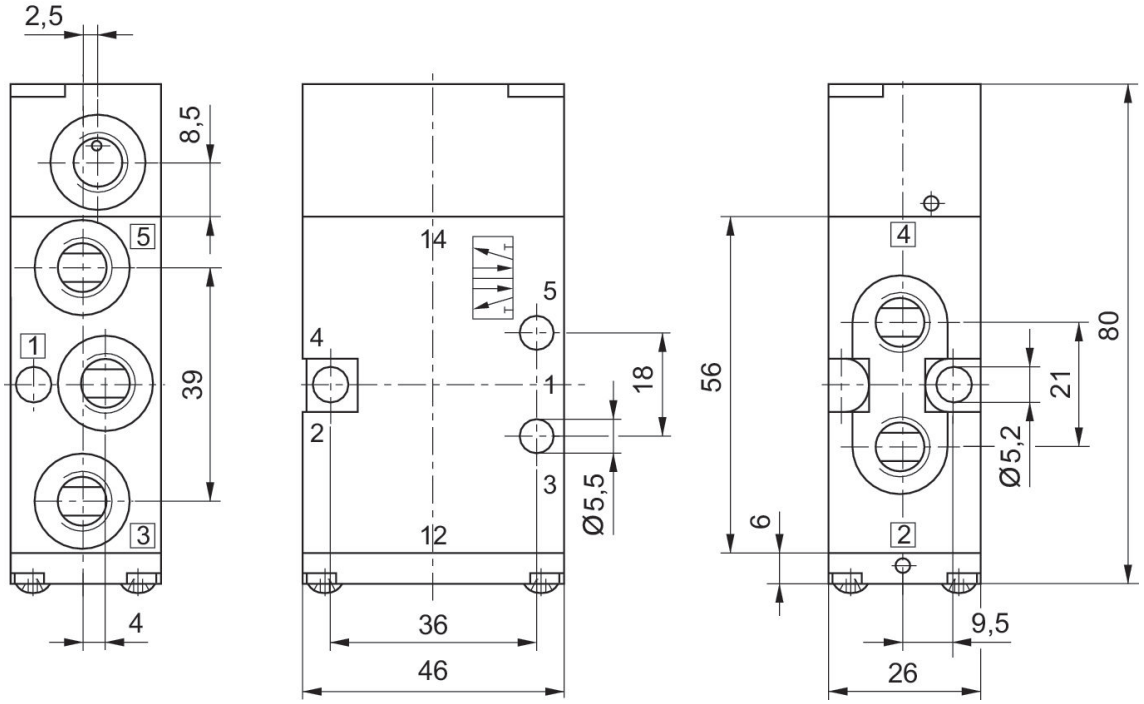

5/2-directional valve, Series CD04, Single Air Pilot

Flow: 900 l/min
Activation: Pneumatically
Actuating control: Single Air Pilot
Compressed air connection type: Internal thread
Compressed air connection input: G 1/8
Compressed air connection output: G 1/8
Compressed air connection, exhaust: G 1/8
Min. control pressure: 3.5 bar
Max. control pressure: 10 bar
Type: Spool valve, positive overlapping
Ambient temperature min./max.: -15 °C ... 65 °C
Medium temperature min./max.: -15 °C ... 65 °C
Working pressure min./max.: -0.95 bar ... 10 bar



	Min. ambient temperature [°C]	Max. ambient temperature [°C]	Part No.
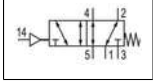	-15	65	5710300100

Dimensions

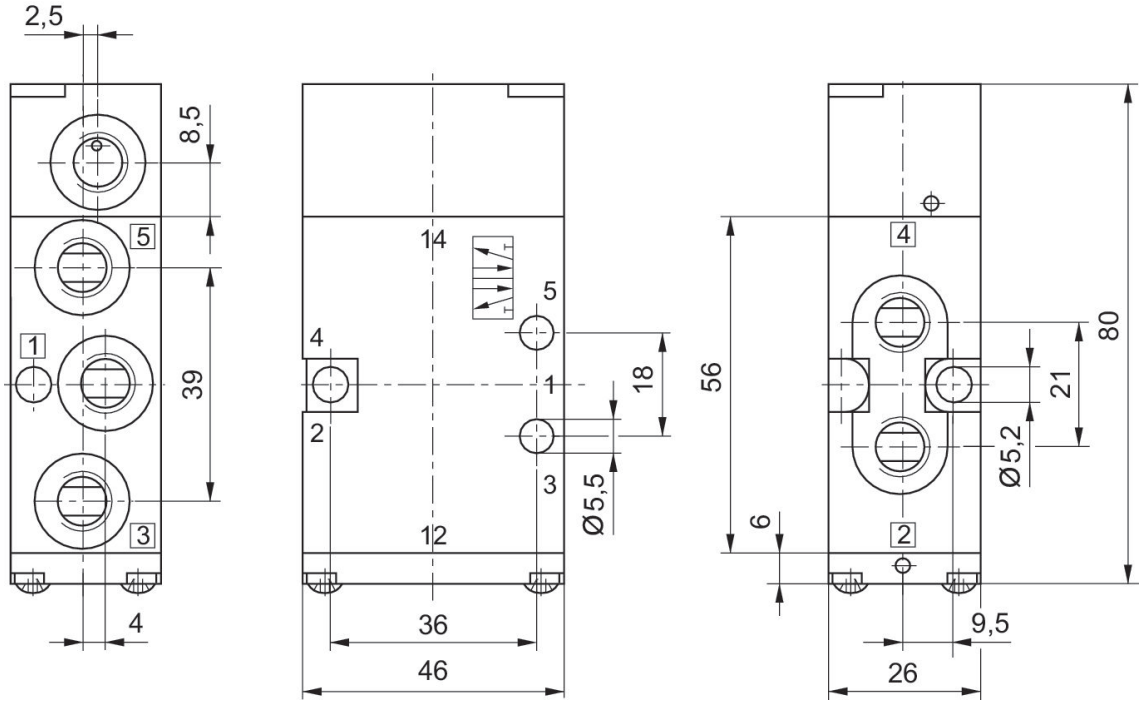

5/2-directional valve, Series CD04, Double Air Pilot

Flow: 900 l/min
Activation: Pneumatically
Actuating control: Double Air Pilot
Compressed air connection type: Internal thread
Compressed air connection input: M10x1
Compressed air connection output: M10x1
Compressed air connection, exhaust: M10x1
Min. control pressure: 2 bar
Max. control pressure: 10 bar
Type: Spool valve, positive overlapping
Ambient temperature min./max.: -15 °C ... 65 °C
Medium temperature min./max.: -15 °C ... 65 °C
Working pressure min./max.: -0.95 bar ... 10 bar



	Min. ambient temperature [°C]	Max. ambient temperature [°C]	Part No.
	-15	65	R412008116

Dimensions

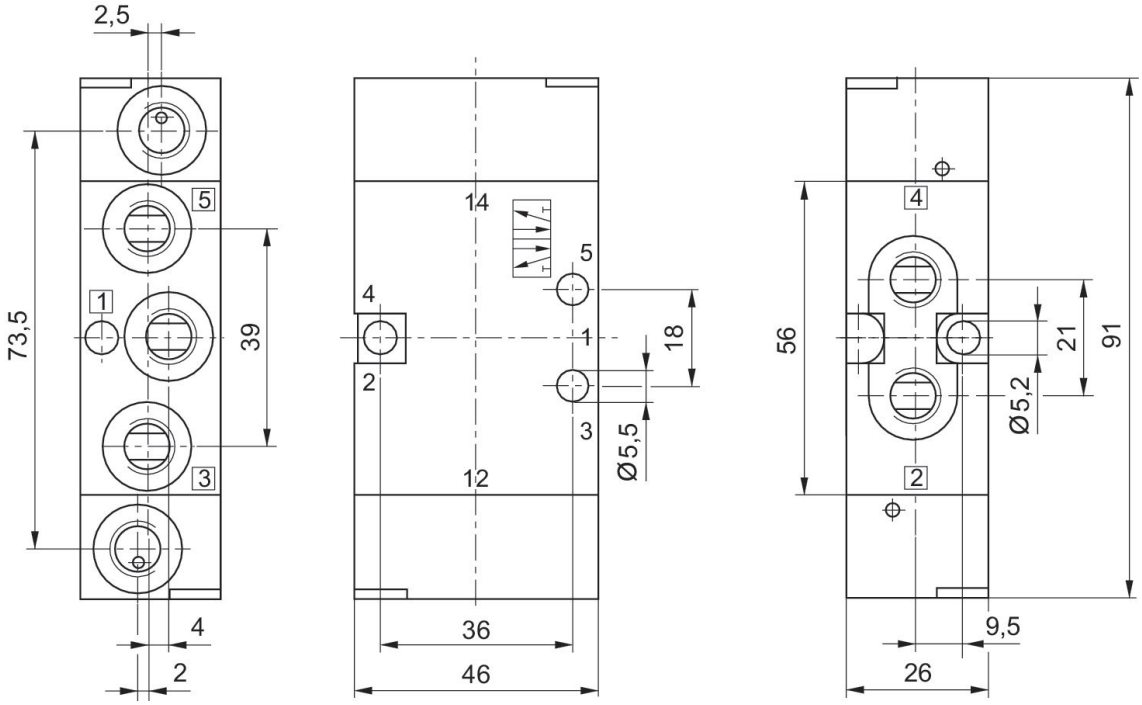

5/2-directional valve, Series CD04, Double Air Pilot

Flow: 900 l/min
Activation: Pneumatically
Actuating control: Double Air Pilot
Compressed air connection type: Internal thread
Compressed air connection input: G 1/8
Compressed air connection output: G 1/8
Compressed air connection, exhaust: G 1/8
Min. control pressure: 2 bar
Max. control pressure: 10 bar
Type: Spool valve, positive overlapping
Ambient temperature min./max.: -15 °C ... 65 °C
Medium temperature min./max.: -15 °C ... 65 °C
Working pressure min./max.: -0.95 bar ... 10 bar



	Min. ambient temperature [°C]	Max. ambient temperature [°C]	Part No.
	-15	65	5710301100

Dimensions

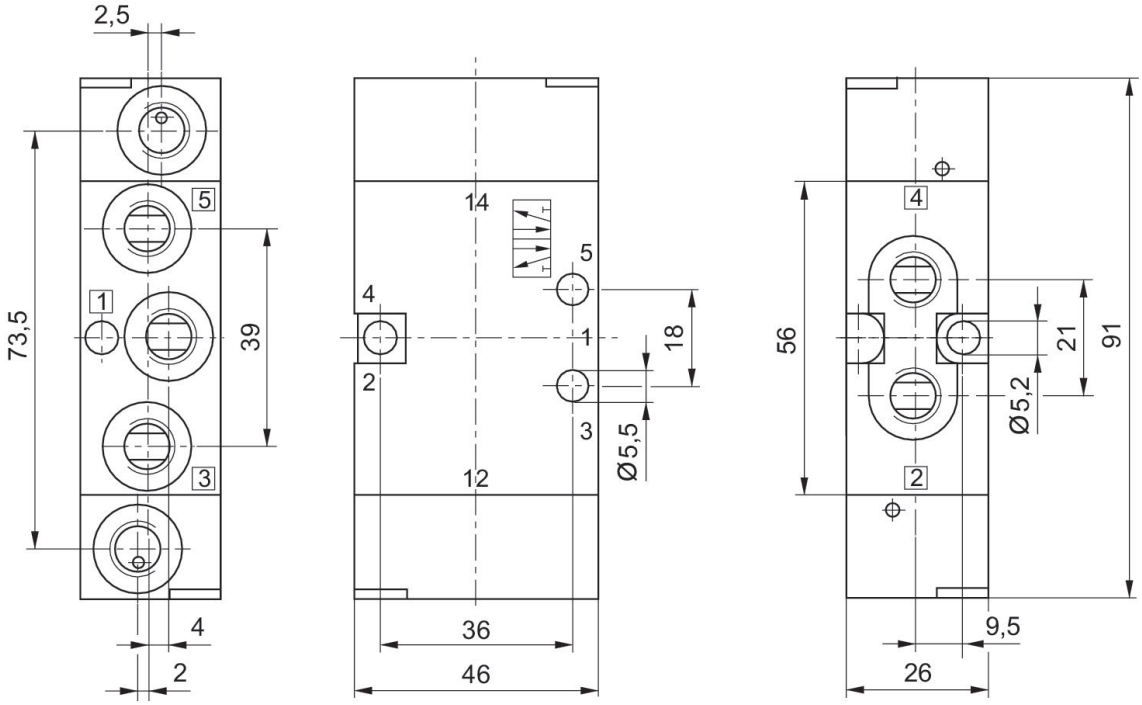

3/2-directional valve, Series CD04, Single Air Pilot

Flow: 900 l/min
Activation: Pneumatically
Actuating control: Single Air Pilot
Compressed air connection type: Internal thread
Min. control pressure: 3.5 bar
Max. control pressure: 10 bar
Type: Spool valve, positive overlapping
Ambient temperature min./max.: -15 °C ... 65 °C
Medium temperature min./max.: -15 °C ... 65 °C
Working pressure min./max.: -0.95 bar ... 10 bar



	Function	Min. ambient temperature [°C]	Max. ambient temperature [°C]	Part No.
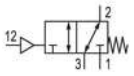	NC/NO	-15	65	R412013298

Dimensions in inches

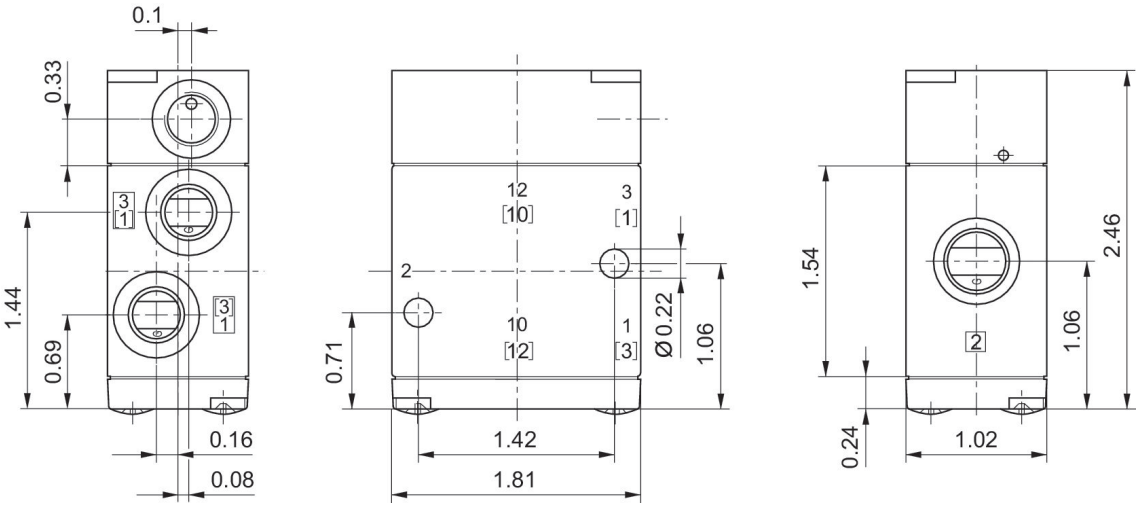

5/2-directional valve, Series CD04, Single Air Pilot

Flow: 900 l/min
Activation: Pneumatically
Actuating control: Single Air Pilot
Compressed air connection type: Internal thread
Min. control pressure: 3.5 bar
Max. control pressure: 10 bar
Type: Spool valve, positive overlapping
Ambient temperature min./max.: -15 °C ... 65 °C
Medium temperature min./max.: -15 °C ... 65 °C
Working pressure min./max.: -0.95 bar ... 10 bar



	Min. ambient temperature [°C]	Max. ambient temperature [°C]	Part No.
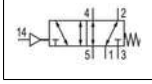	-15	65	R412013299

Dimensions in inches

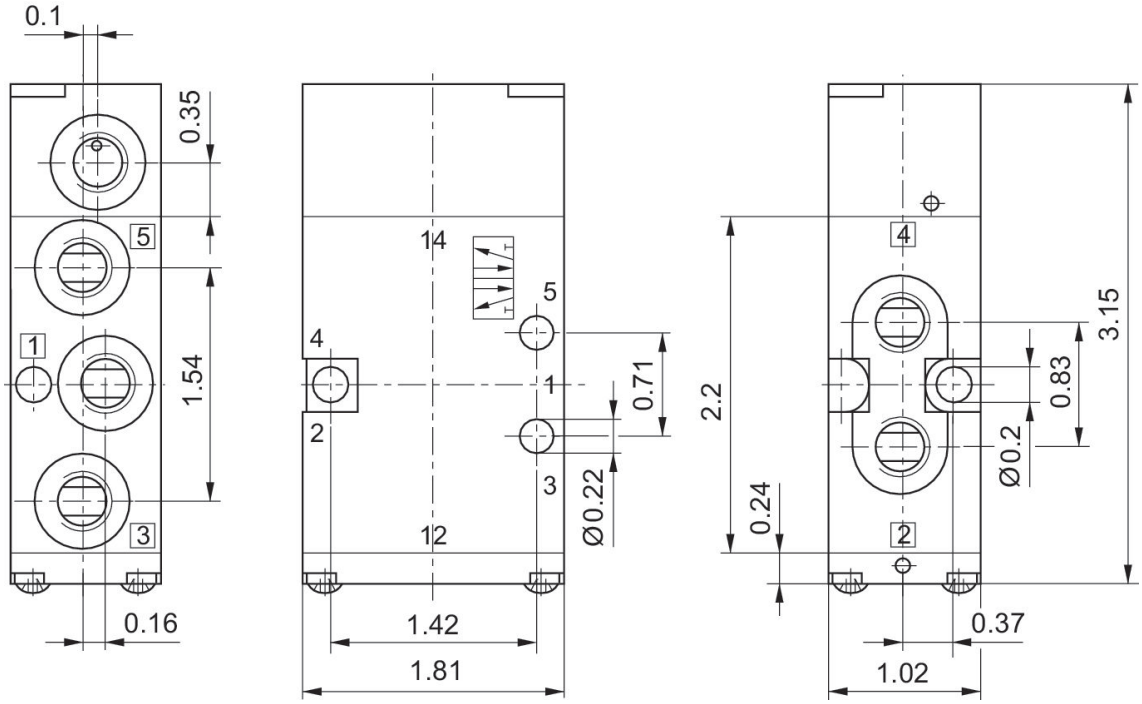

5/2-directional valve, Series CD04, Double Air Pilot

Flow: 900 l/min
Activation: Pneumatically
Actuating control: Double Air Pilot
Compressed air connection type: Internal thread
Min. control pressure: 2 bar
Max. control pressure: 10 bar
Type: Spool valve, positive overlapping
Ambient temperature min./max.: -15 °C ... 65 °C
Medium temperature min./max.: -15 °C ... 65 °C
Working pressure min./max.: -0.95 bar ... 10 bar



	Min. ambient temperature [°C]	Max. ambient temperature [°C]	Part No.
	-15	65	R412013300

Dimensions in inches

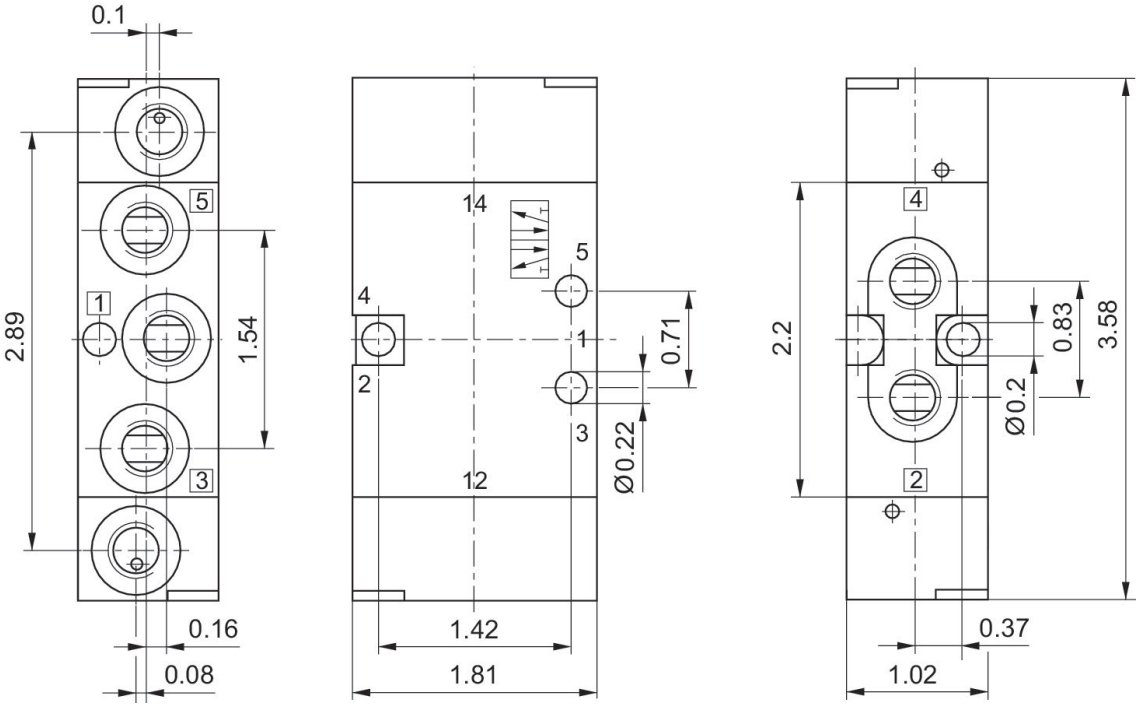

3/2-directional valve, Series CD04, Plunger

Flow: 900 l/min
Activation: Mechanical
Compressed air connection type: Internal thread
Compressed air connection input: G 1/8
Compressed air connection output: G 1/8
Compressed air connection, exhaust: G 1/8
Ambient temperature min./max.: -20 °C ... 65 °C
Medium temperature min./max.: -20 °C ... 65 °C
Working pressure min./max.: -0.95 bar ... 10 bar



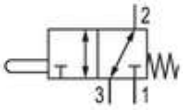

Min. actuating force [N]	Function	Min. ambient temperature [°C]	Max. ambient temperature [°C]	Part No.
60	NC/NO	-20	65	5634000100

Dimensions in mm (Basic valve)

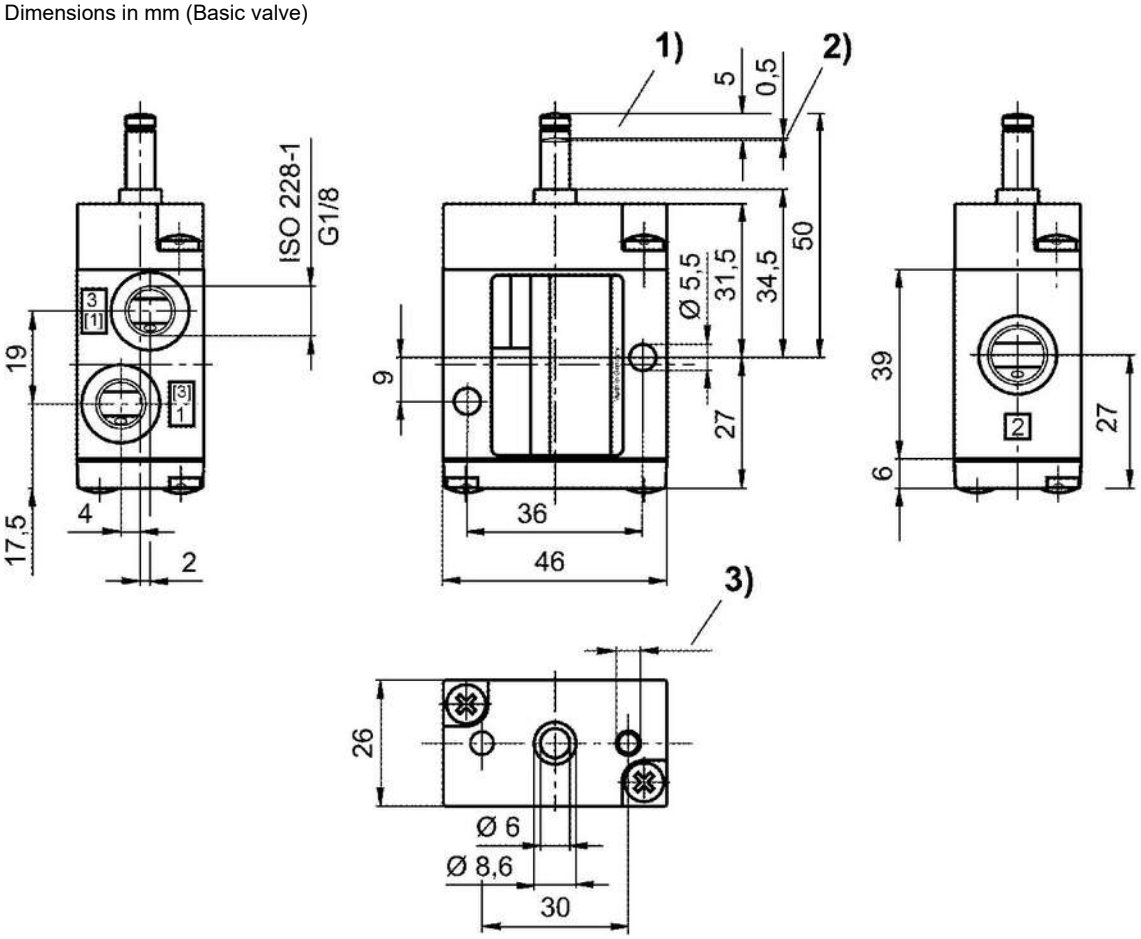

1) Stroke
2) Overstroke
3) Ø 4.5 - 12 mm deep

3/2-directional valve, Series CD04, Roller

Flow: 900 l/min
Activation: Mechanical
Compressed air connection type: Internal thread
Compressed air connection input: G 1/8
Compressed air connection output: G 1/8
Compressed air connection, exhaust: G 1/8
Ambient temperature min./max.: -20 °C ... 65 °C
Medium temperature min./max.: -20 °C ... 65 °C
Working pressure min./max.: -0.95 bar ... 10 bar



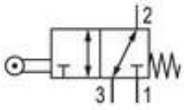

Min. actuating force [N]	Function	Min. ambient temperature [°C]	Max. ambient temperature [°C]	Part No.
30	NC/NO	-20	65	5634010100

Dimensions in mm (Basic valve)

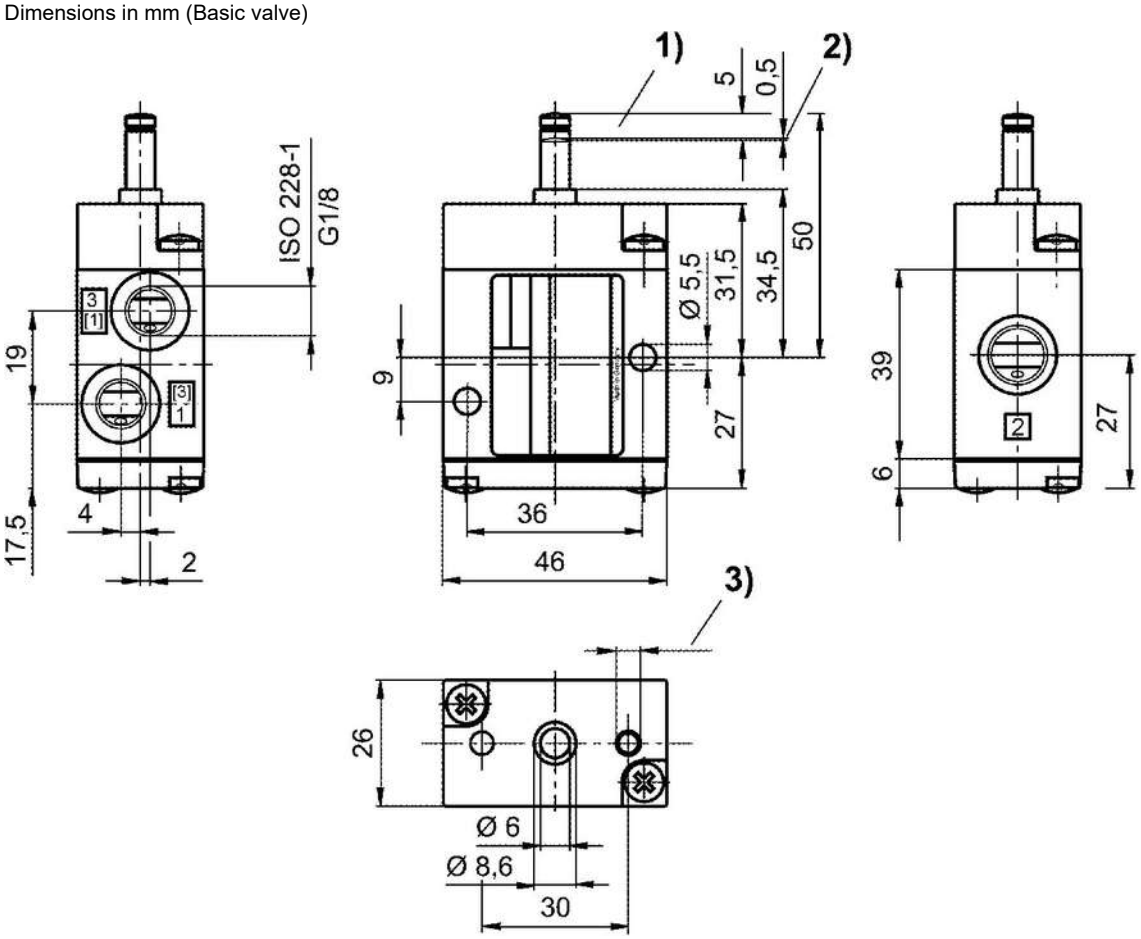

1) Stroke
2) Overstroke
3) Ø 4.5 - 12 mm deep

Dimensions in mm

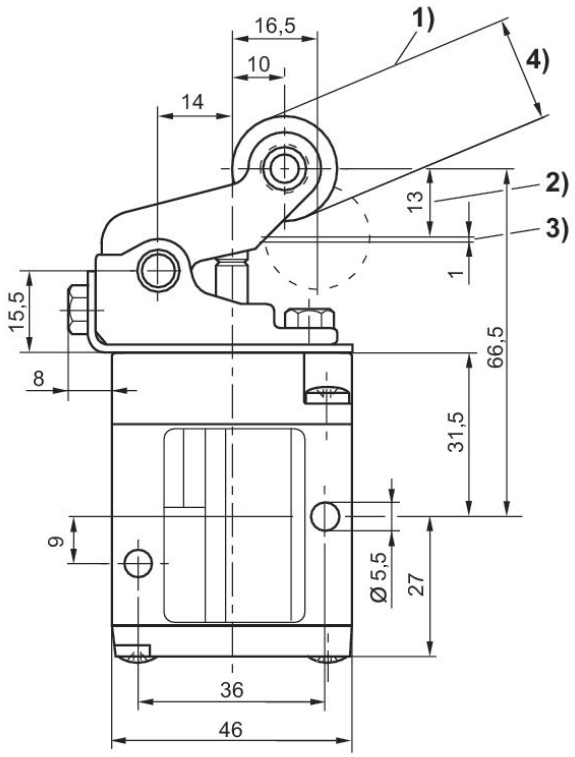

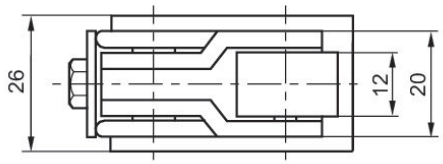

1) approach angle of rollers max. 30°
2) Stroke
3) Overstroke
4) 5634010100: Ø20 (POM) / R412008117: Ø19 (ST)

3/2-directional valve, Series CD04, Hand lever

Flow: 900 l/min
Activation: Mechanical
Compressed air connection type: Internal thread
Compressed air connection input: G 1/8
Compressed air connection output: G 1/8
Compressed air connection, exhaust: G 1/8
Ambient temperature min./max.: -20 °C ... 65 °C
Medium temperature min./max.: -20 °C ... 65 °C
Working pressure min./max.: -0.95 bar ... 10 bar



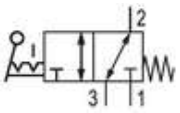

Min. actuating force [N]	Function	Min. ambient temperature [°C]	Max. ambient temperature [°C]	Part No.
15	NC/NO	-20	65	5634030100

Dimensions in mm (Basic valve)

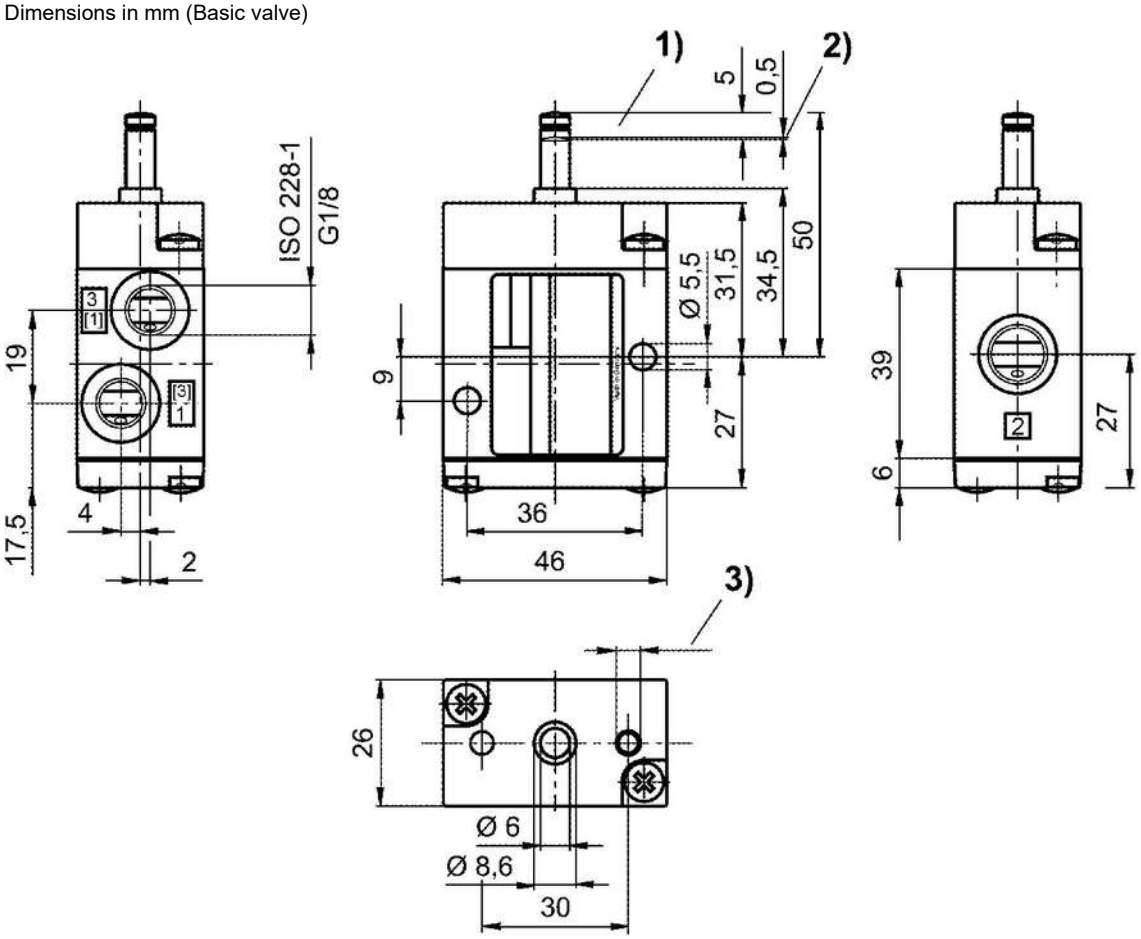

1) Stroke
2) Overstroke
3) Ø 4.5 - 12 mm deep

Dimensions in mm

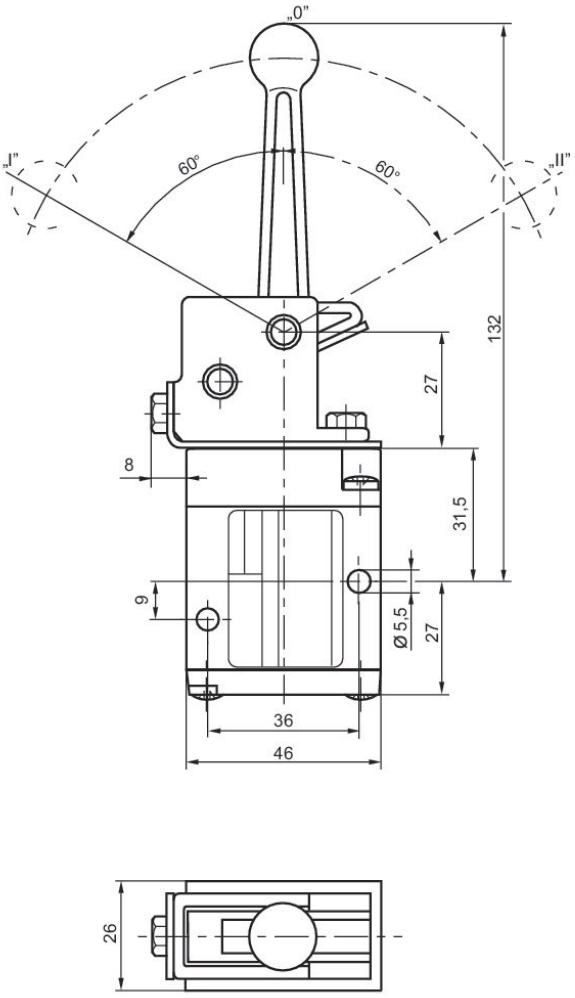

Position 0: initial position, position I: with detent, manual return, position II: automatic spring return

3/2-directional valve, Series CD04, Hand lever, with detent, without detent

Flow: 900 l/min
Activation: Mechanical
Compressed air connection type: Internal thread
Compressed air connection input: G 1/8
Compressed air connection output: G 1/8
Compressed air connection, exhaust: G 1/8
Ambient temperature min./max.: -20 °C ... 65 °C
Medium temperature min./max.: -20 °C ... 65 °C
Working pressure min./max.: -0.95 bar ... 10 bar



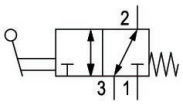

Min. actuating force [N]	Function	Min. ambient temperature [°C]	Max. ambient temperature [°C]	Part No.
15	NC/NO	-20	65	5634040100

Dimensions in mm (Basic valve)

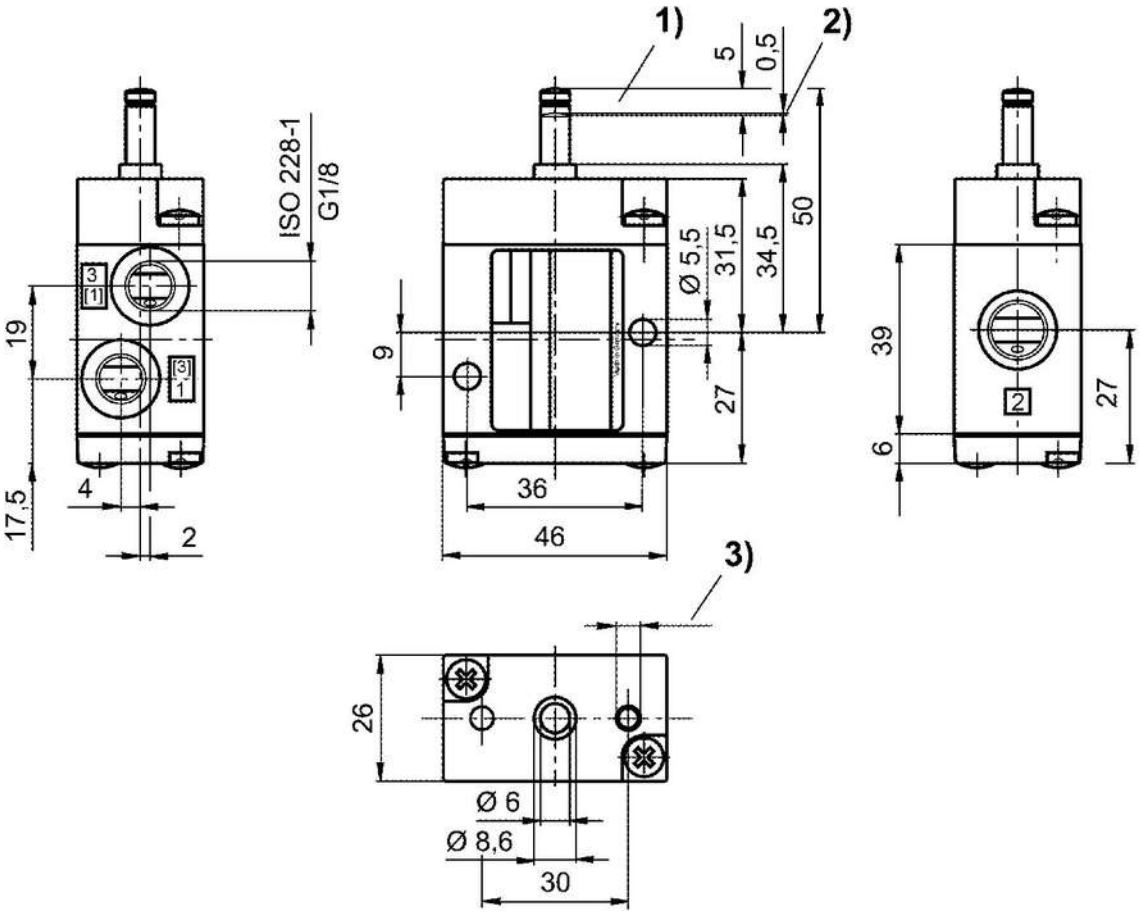

1) Stroke
2) Overstroke
3) Ø 4.5 - 12 mm deep

Dimensions in mm

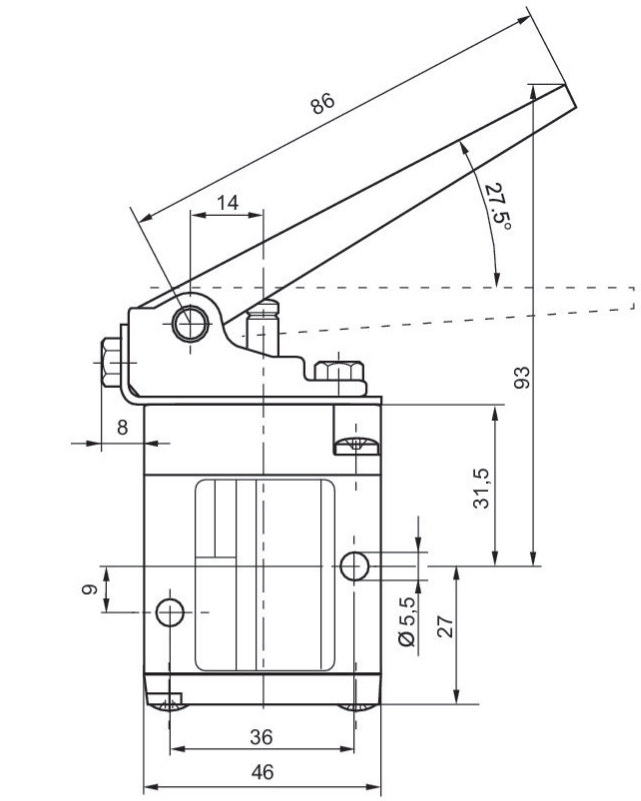

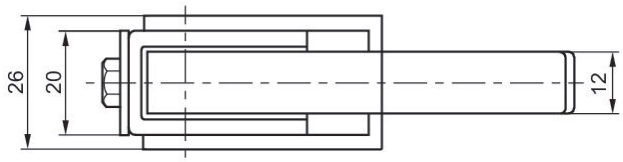

3/2-directional valve, Series CD04, Rotary lever, with detent

Flow: 900 l/min
Activation: Mechanical
Compressed air connection type: Internal thread
Compressed air connection input: G 1/8
Compressed air connection output: G 1/8
Compressed air connection, exhaust: G 1/8
Ambient temperature min./max.: -20 °C ... 65 °C
Medium temperature min./max.: -20 °C ... 65 °C
Working pressure min./max.: -0.95 bar ... 10 bar



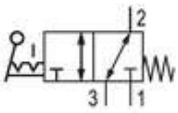

Min. actuating force [N]	Function	Min. ambient temperature [°C]	Max. ambient temperature [°C]	Part No.
15	NC/NO	-20	65	5634050100

Dimensions in mm (Basic valve)

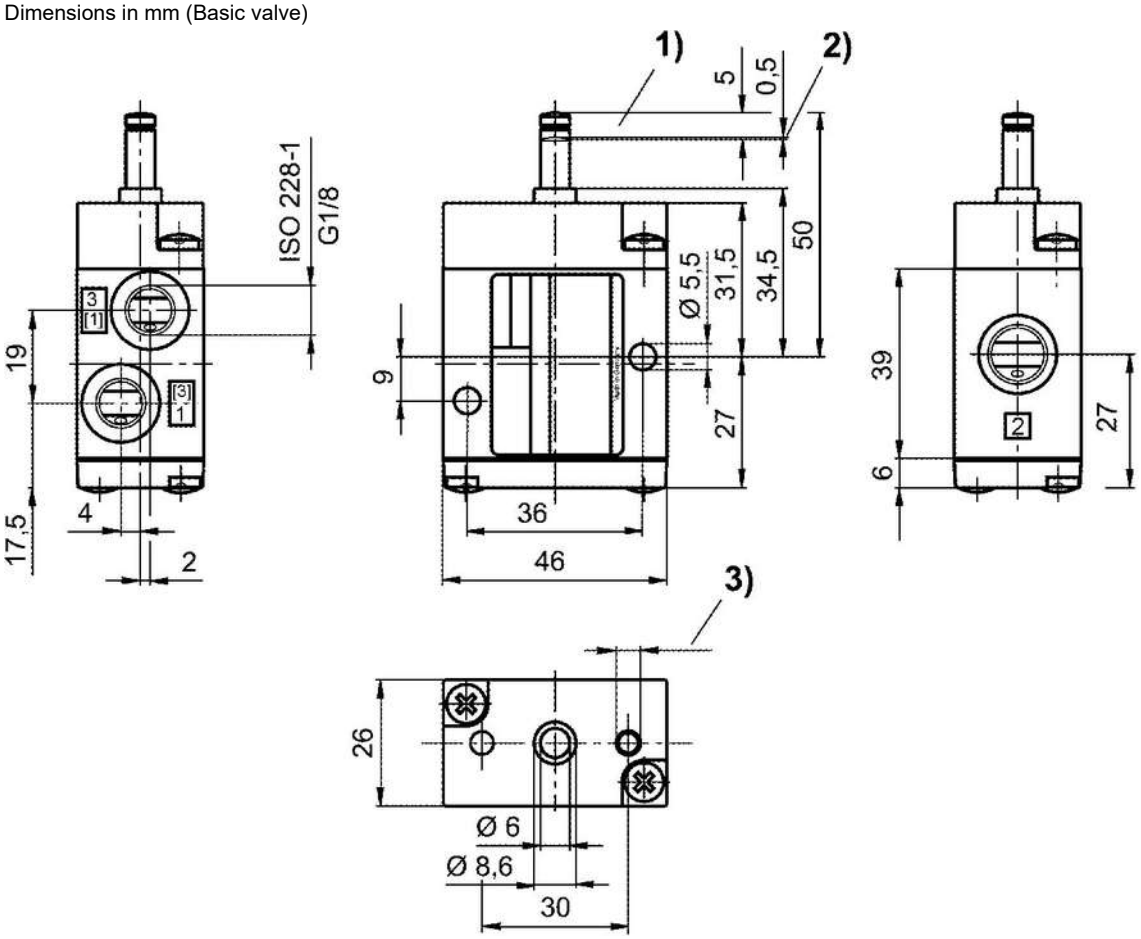

1) Stroke
2) Overstroke
3) Ø 4.5 - 12 mm deep

Dimensions in mm

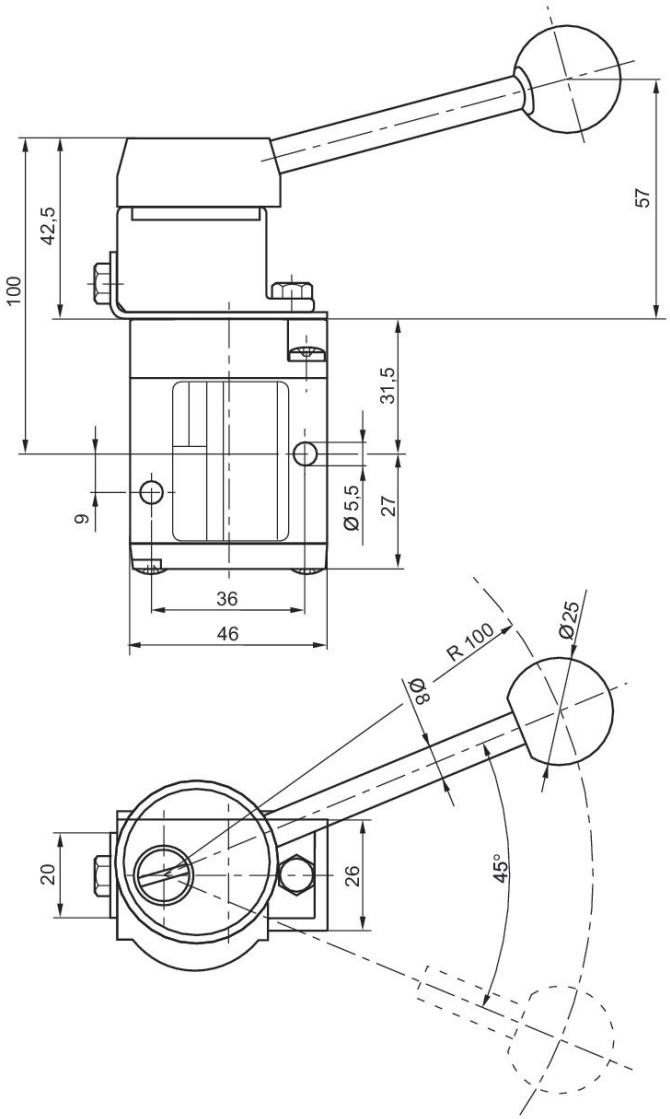

3/2-directional valve, Series CD04, Button

Flow: 900 l/min
Activation: Mechanical
Compressed air connection type: Internal thread
Compressed air connection input: G 1/8
Compressed air connection output: G 1/8
Compressed air connection, exhaust: G 1/8
Ambient temperature min./max.: -20 °C ... 65 °C
Medium temperature min./max.: -20 °C ... 65 °C
Working pressure min./max.: -0.95 bar ... 10 bar



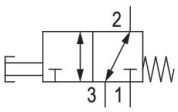

Min. actuating force [N]	Function	Min. ambient temperature [°C]	Max. ambient temperature [°C]	Part No.
60	NC/NO	-20	65	5634060100

Dimensions in mm (Basic valve)

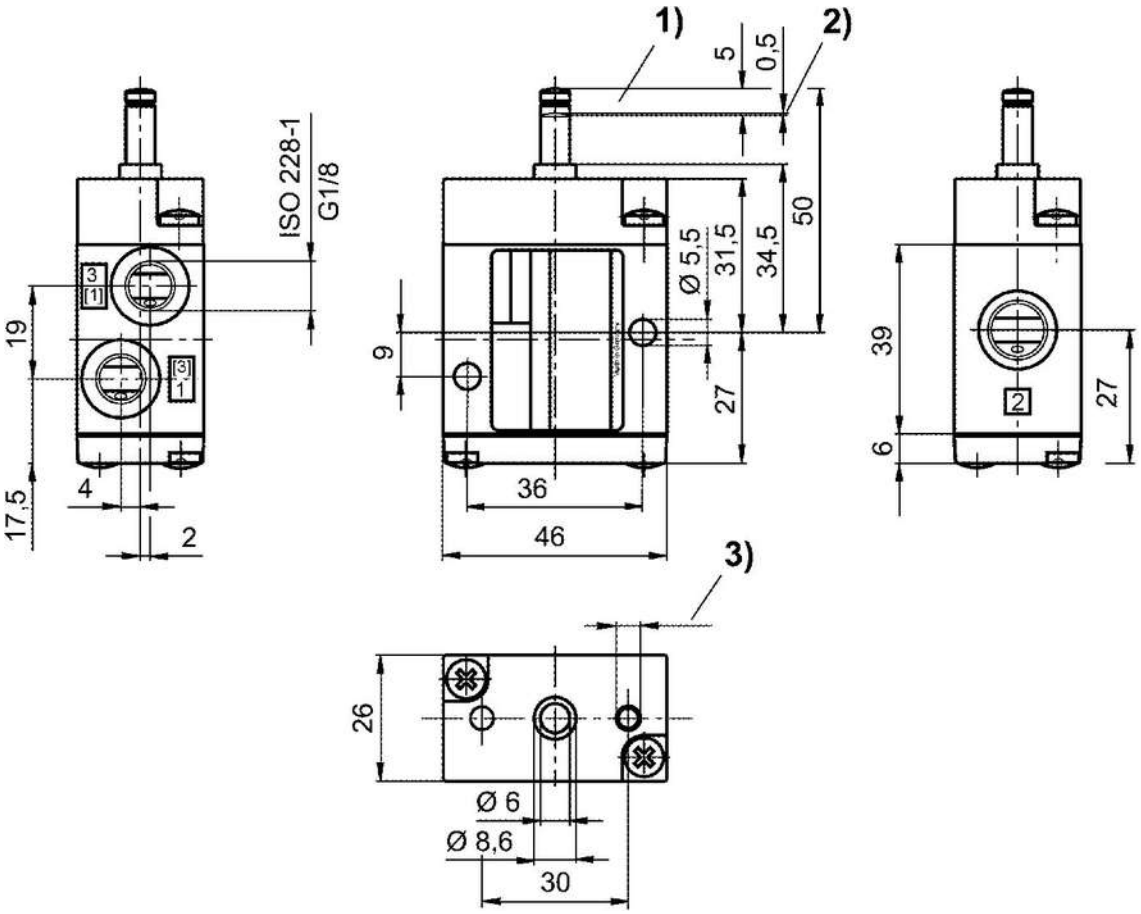

1) Stroke
2) Overstroke
3) Ø 4.5 - 12 mm deep

Dimensions in mm

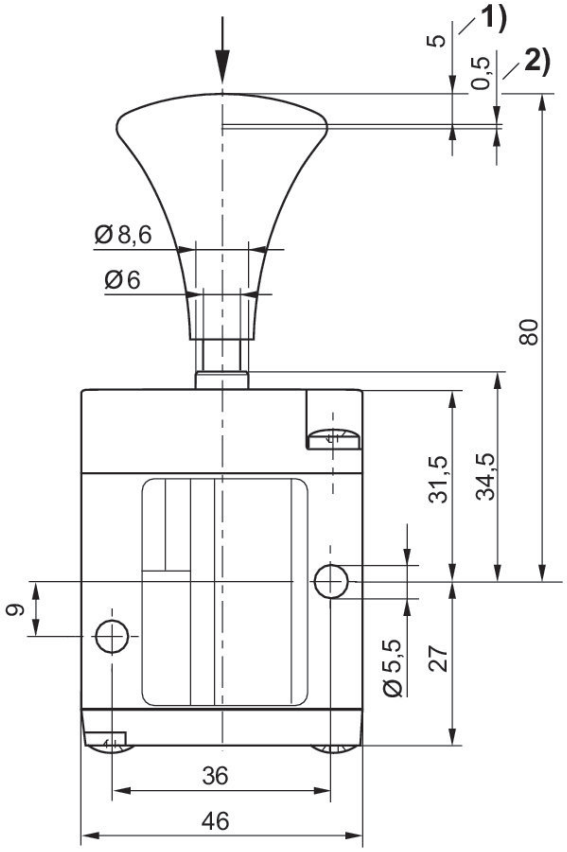

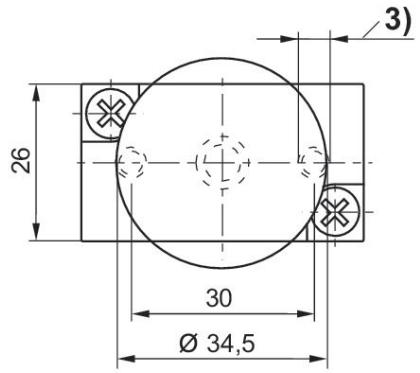

1) Stroke
2) Overstroke
3) Ø 4.5 - 12 mm deep

5/2-directional valve, Series CD04, Plunger

: not lockable
Flow: 900 l/min
Activation: Mechanical
Compressed air connection type: Internal thread
Compressed air connection input: G 1/8
Compressed air connection output: G 1/8
Compressed air connection, exhaust: G 1/8
Ambient temperature min./max.: -20 °C ... 65 °C
Medium temperature min./max.: -20 °C ... 65 °C
Working pressure min./max.: -0.95 bar ... 10 bar



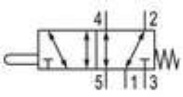

Min. actuating force [N]	Min. ambient temperature [°C]	Max. ambient temperature [°C]	Part No.
70	-20	65	5634200100

Dimensions in mm (Basic valve)

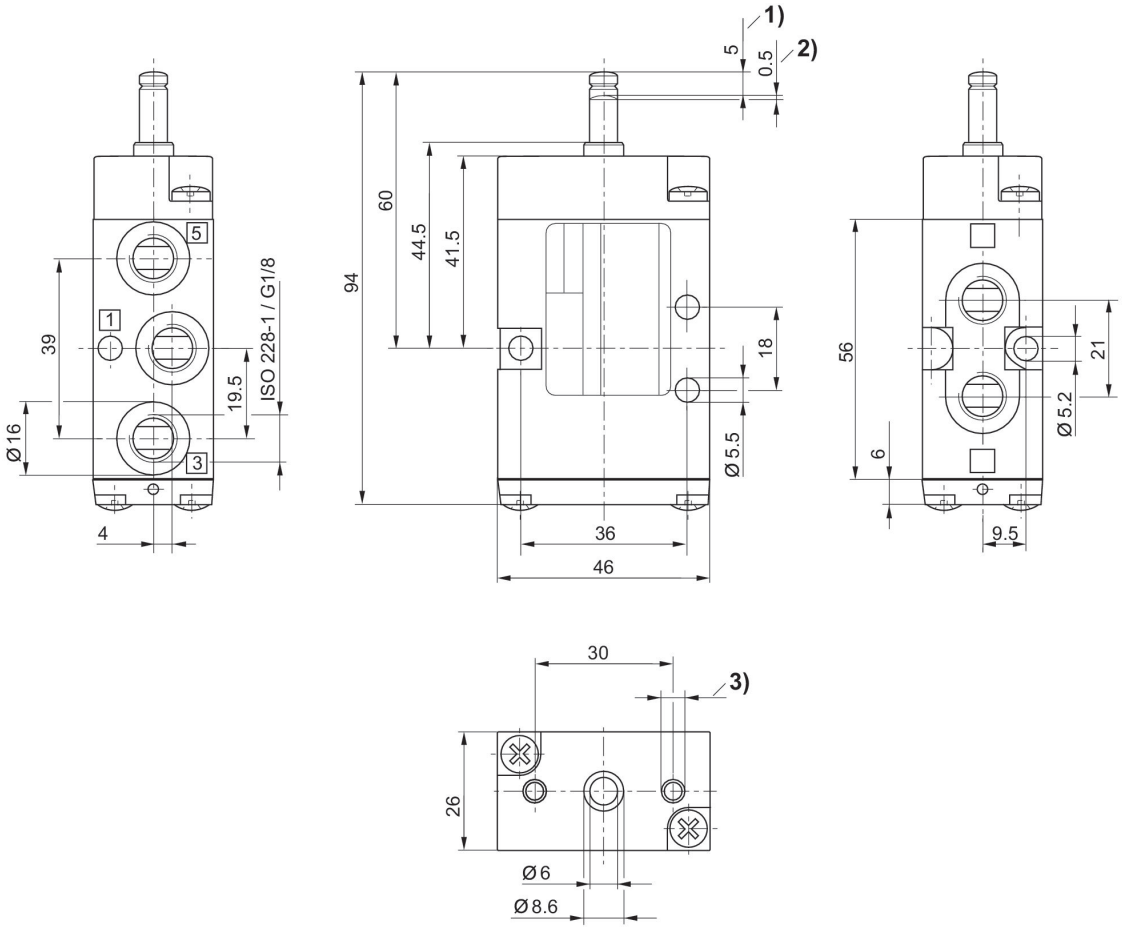

1) Stroke
2) Overstroke
3) Ø 4.5 - 12 mm deep

5/2-directional valve, Series CD04, Roller

: not lockable
Flow: 900 l/min
Activation: Mechanical
Compressed air connection type: Internal thread
Compressed air connection input: G 1/8
Compressed air connection output: G 1/8
Compressed air connection, exhaust: G 1/8
Ambient temperature min./max.: -20 °C ... 65 °C
Medium temperature min./max.: -20 °C ... 65 °C
Working pressure min./max.: -0.95 bar ... 10 bar



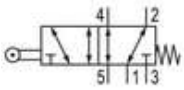

Min. actuating force [N]	Min. ambient temperature [°C]	Max. ambient temperature [°C]	Part No.
35	-20	65	5634210100

Dimensions in mm (Basic valve)

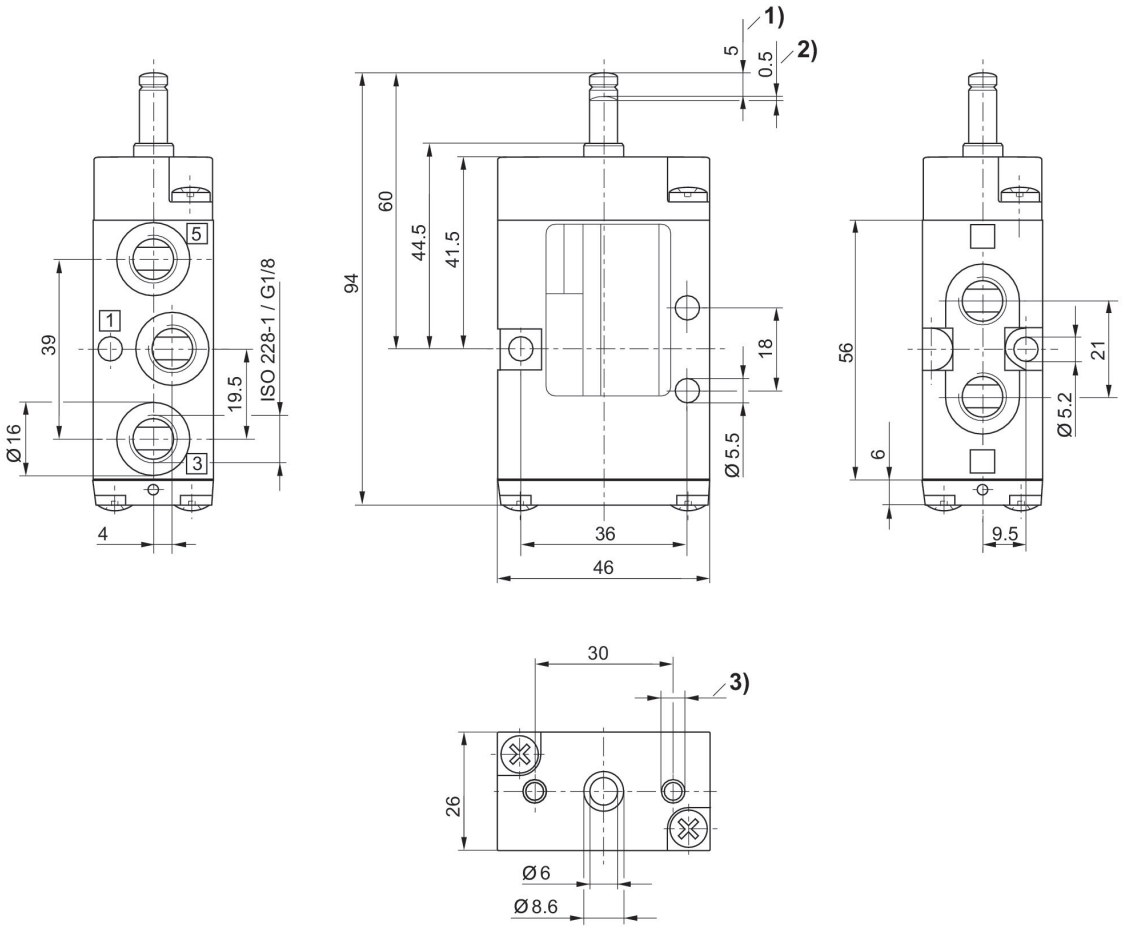

1) Stroke
2) Overstroke
3) Ø 4.5 - 12 mm deep

Dimensions in mm

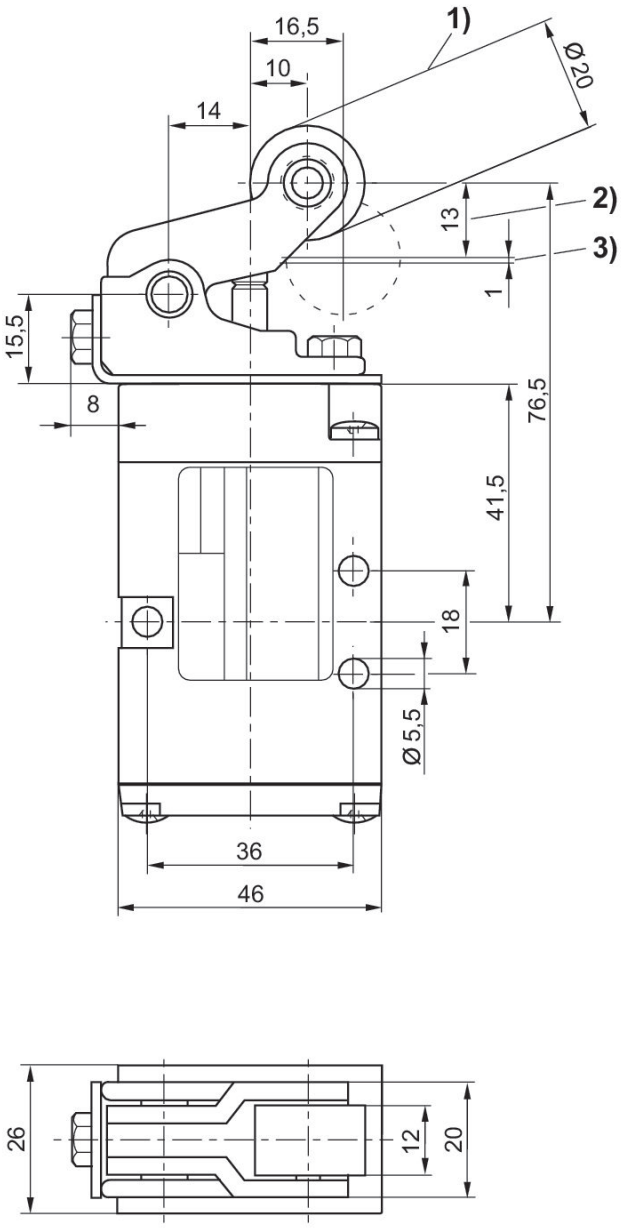

1) approach angle of rollers max. 30°
2) Stroke
3) Overstroke

5/2-directional valve, Series CD04, Hand lever, with detent

: not lockable
Flow: 900 l/min
Activation: Mechanical
Compressed air connection type: Internal thread
Compressed air connection input: G 1/8
Compressed air connection output: G 1/8
Compressed air connection, exhaust: G 1/8
Ambient temperature min./max.: -20 °C ... 65 °C
Medium temperature min./max.: -20 °C ... 65 °C
Working pressure min./max.: -0.95 bar ... 10 bar





Min. actuating force [N]	Min. ambient temperature [°C]	Max. ambient temperature [°C]	Part No.
15	-20	65	5634230100

Dimensions in mm (Basic valve)

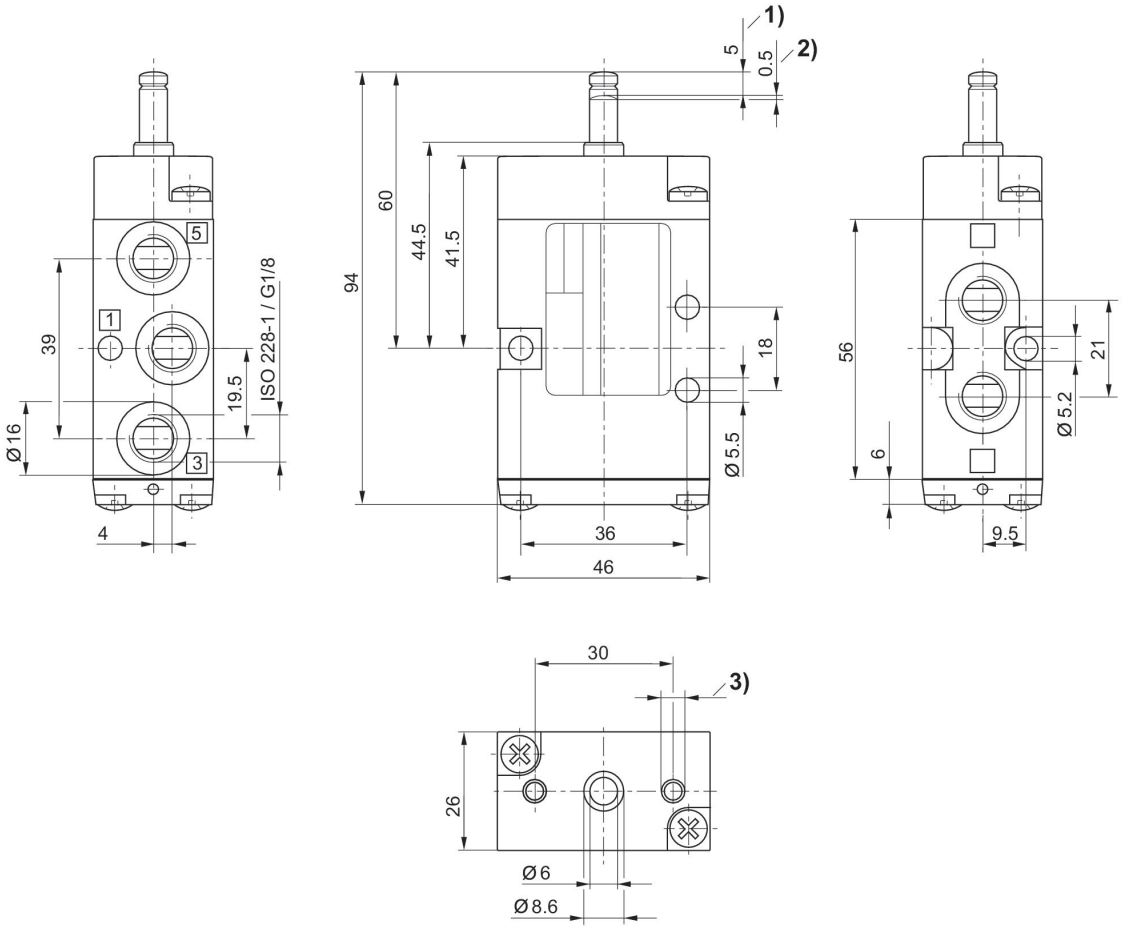

1) Stroke
2) Overstroke
3) Ø 4.5 - 12 mm deep

Dimensions in mm

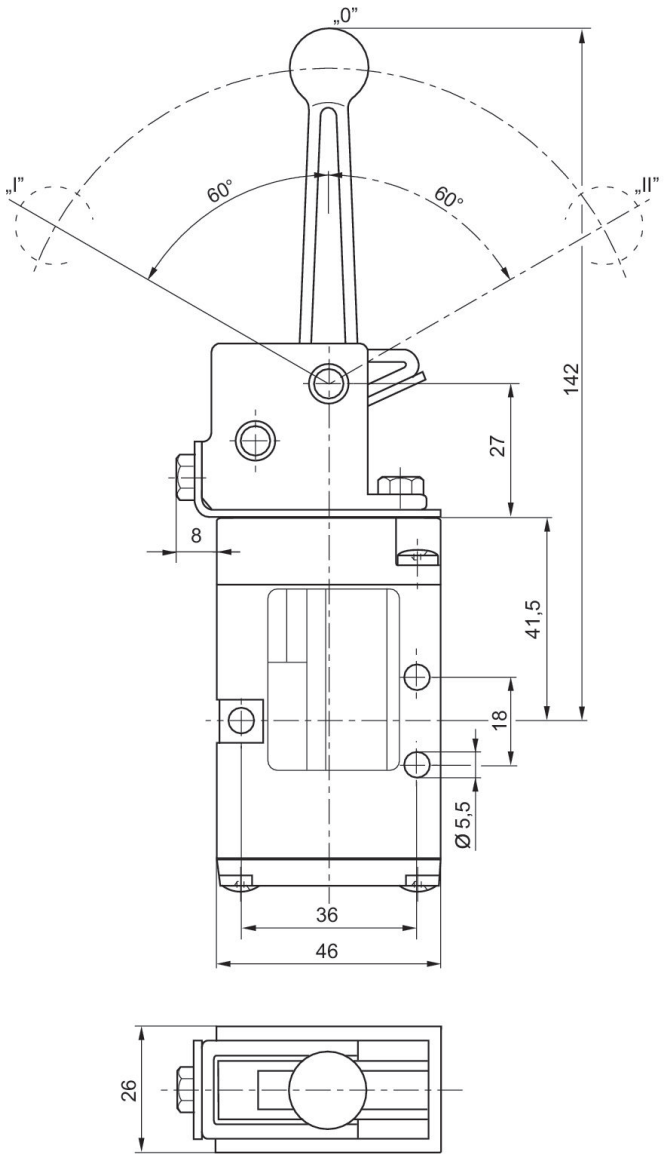

Position 0: initial position, position I: with detent, manual return, position II: automatic spring return

5/2-directional valve, Series CD04, Hand lever

: not lockable
Flow: 900 l/min
Activation: Mechanical
Compressed air connection type: Internal thread
Compressed air connection input: G 1/8
Compressed air connection output: G 1/8
Compressed air connection, exhaust: G 1/8
Ambient temperature min./max.: -20 °C ... 65 °C
Medium temperature min./max.: -20 °C ... 65 °C
Working pressure min./max.: -0.95 bar ... 10 bar



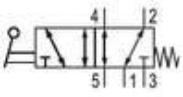

Min. actuating force [N]	Min. ambient temperature [°C]	Max. ambient temperature [°C]	Part No.
60	-20	65	5634240100

Dimensions in mm (Basic valve)

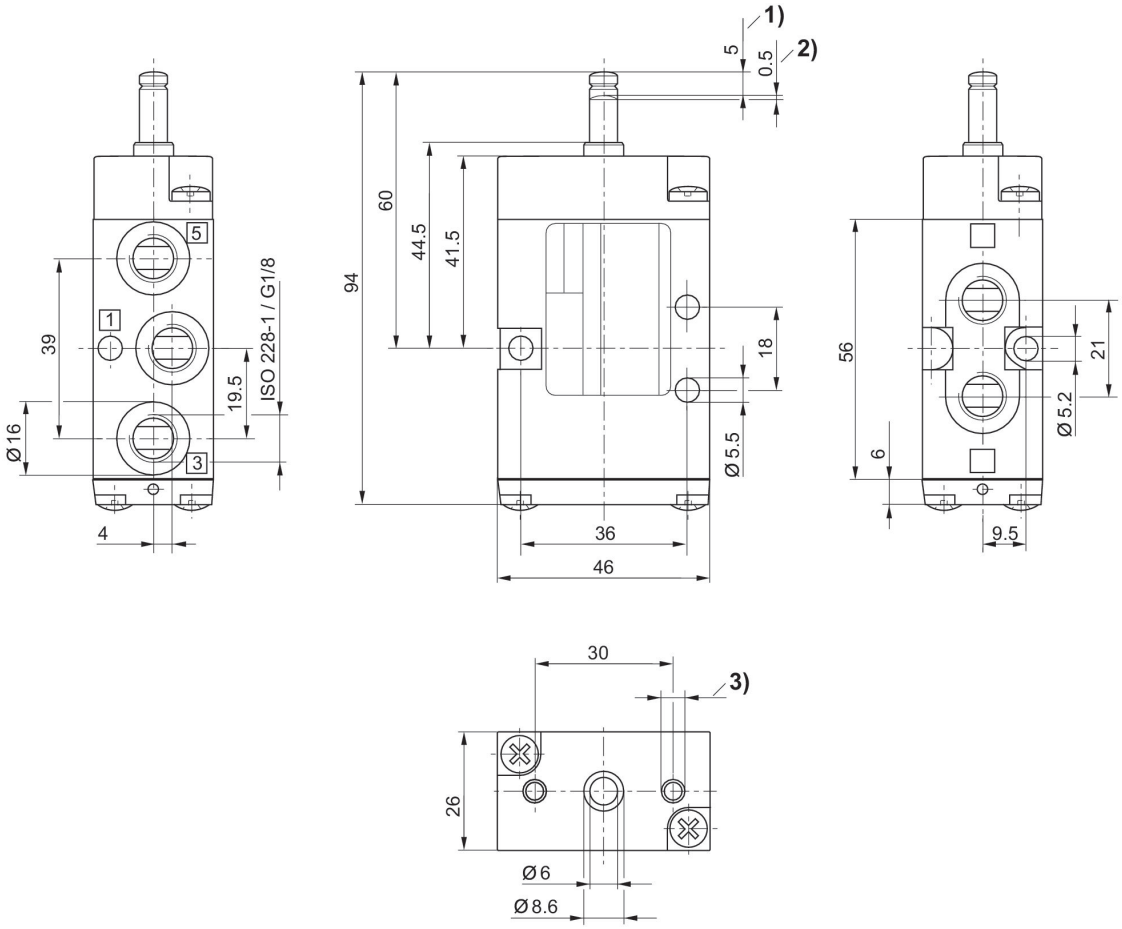

1) Stroke
2) Overstroke
3) Ø 4.5 - 12 mm deep

Dimensions in mm

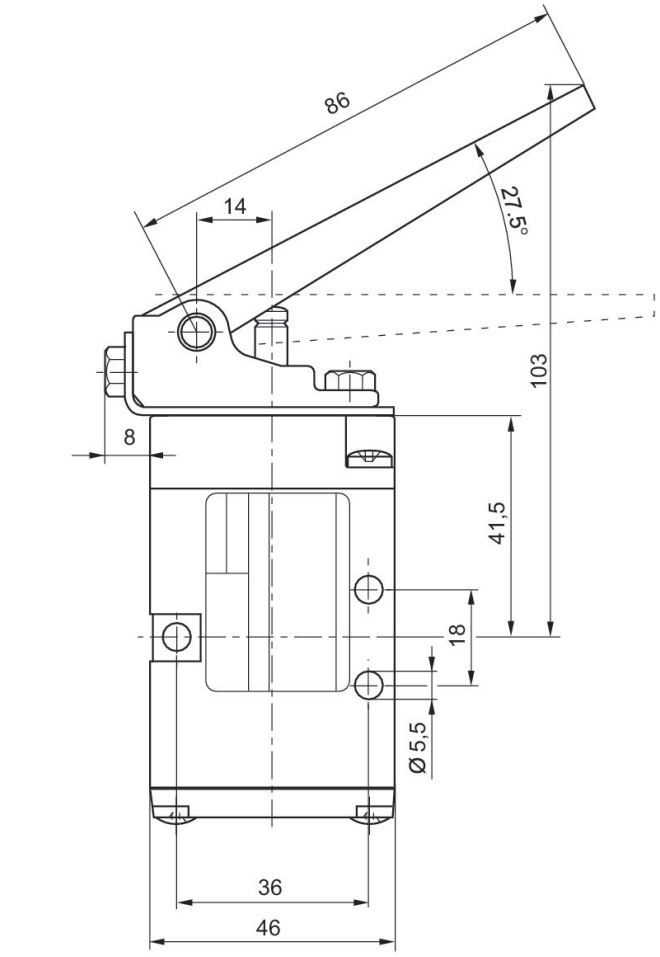

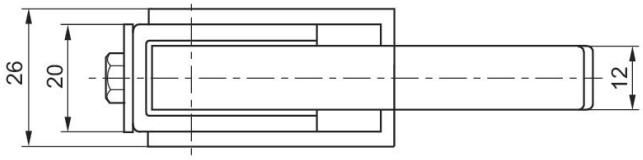

5/2-directional valve, Series CD04, Rotary lever, with detent

: not lockable
Flow: 900 l/min
Activation: Mechanical
Compressed air connection type: Internal thread
Compressed air connection input: G 1/8
Compressed air connection output: G 1/8
Compressed air connection, exhaust: G 1/8
Ambient temperature min./max.: -20 °C ... 65 °C
Medium temperature min./max.: -20 °C ... 65 °C
Working pressure min./max.: -0.95 bar ... 10 bar





Min. actuating force [N]	Min. ambient temperature [°C]	Max. ambient temperature [°C]	Part No.
20	-20	65	5634250100

Dimensions in mm (Basic valve)

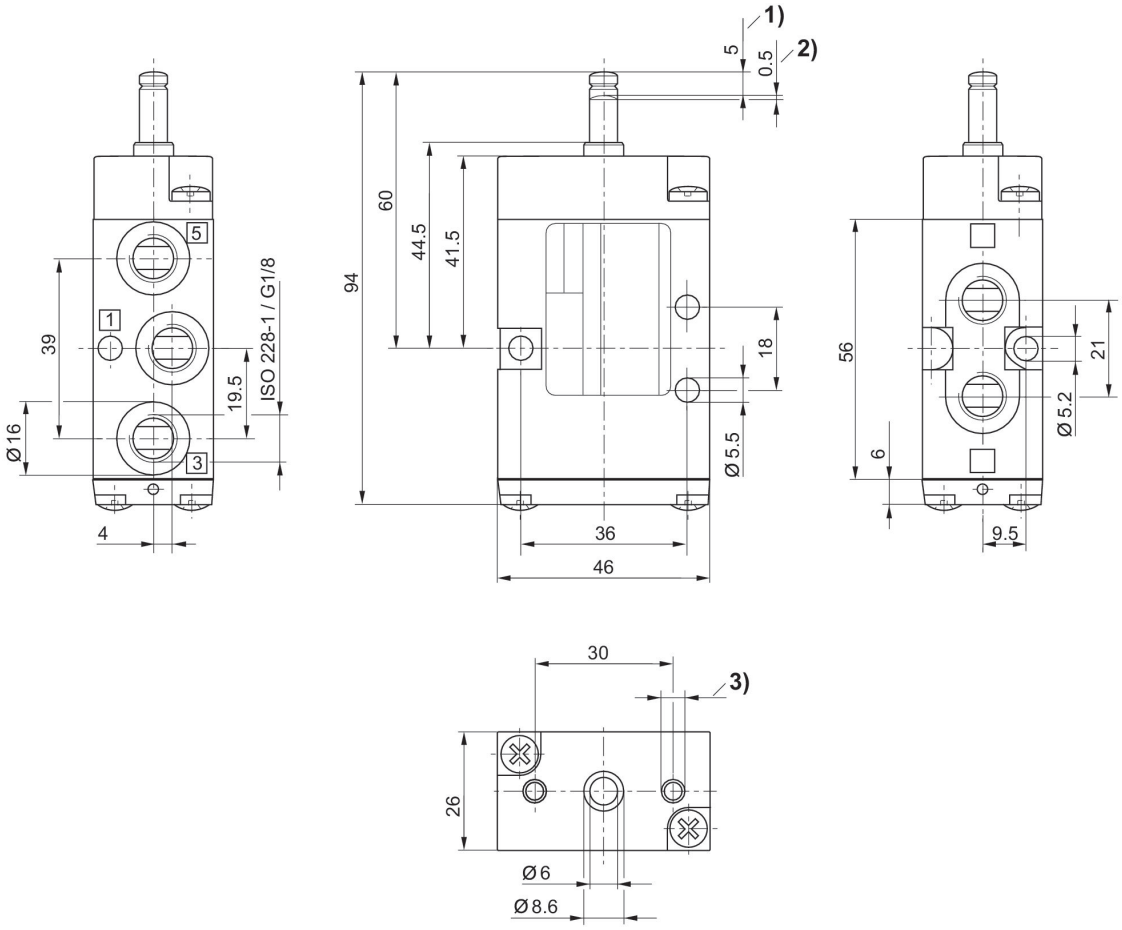

1) Stroke
2) Overstroke
3) Ø 4.5 - 12 mm deep

Dimensions in mm

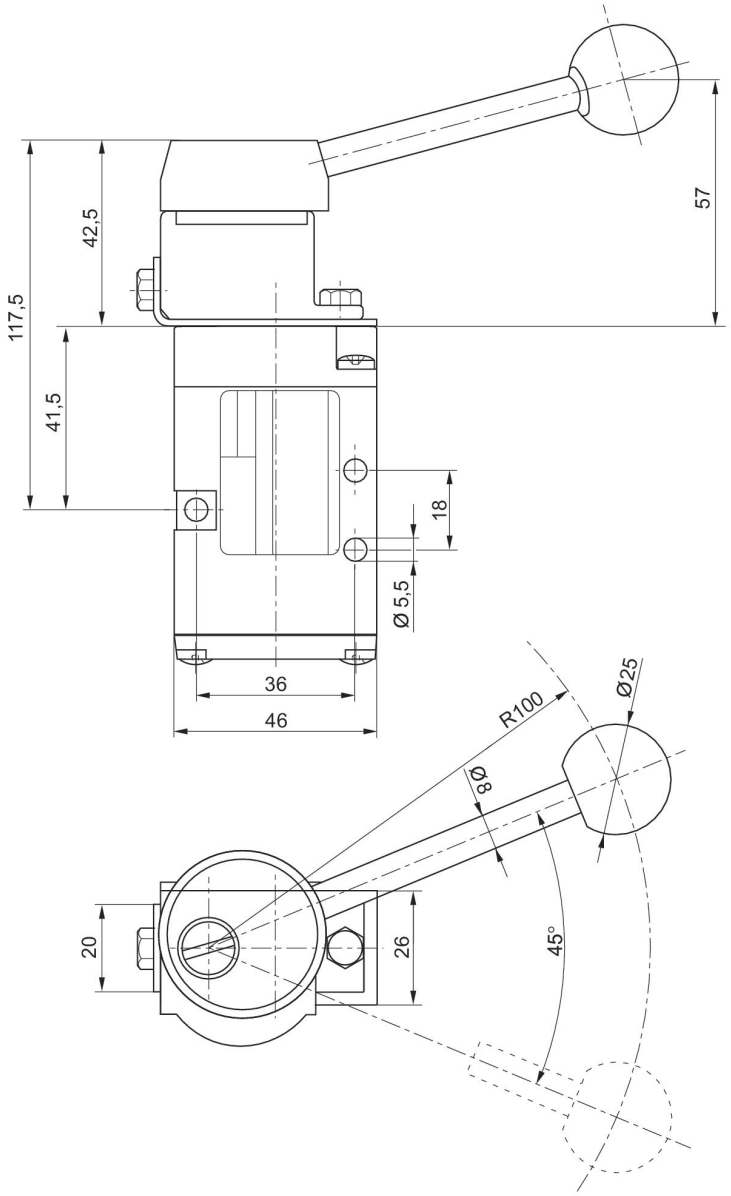

5/2-directional valve, Series CD04, Button

: not lockable
Flow: 900 l/min
Activation: Mechanical
Compressed air connection type: Internal thread
Compressed air connection input: G 1/8
Compressed air connection output: G 1/8
Compressed air connection, exhaust: G 1/8
Ambient temperature min./max.: -20 °C ... 65 °C
Medium temperature min./max.: -20 °C ... 65 °C
Working pressure min./max.: -0.95 bar ... 10 bar



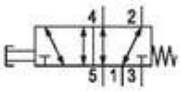

Min. actuating force [N]	Min. ambient temperature [°C]	Max. ambient temperature [°C]	Part No.
70	-20	65	5634260100

Dimensions in mm (Basic valve)

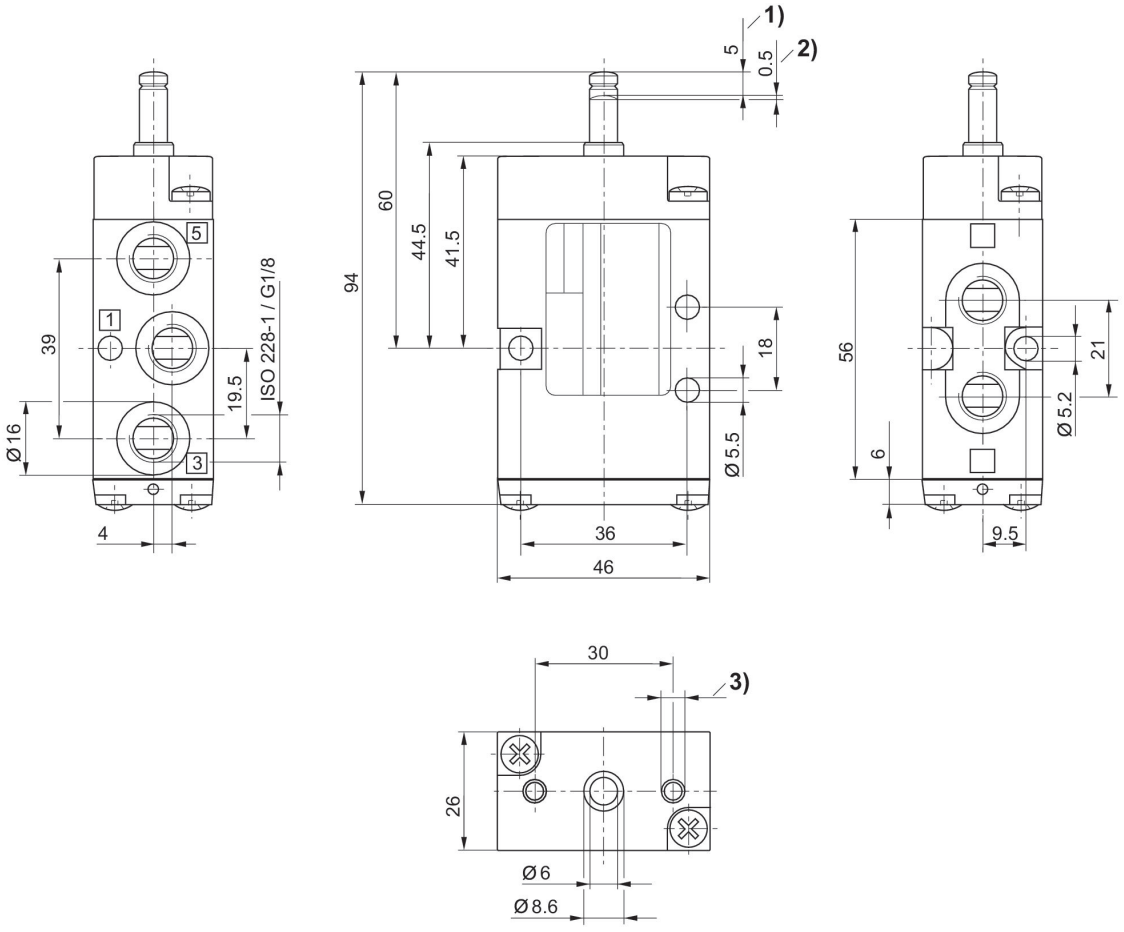

1) Stroke
2) Overstroke
3) Ø 4.5 - 12 mm deep

Dimensions in mm

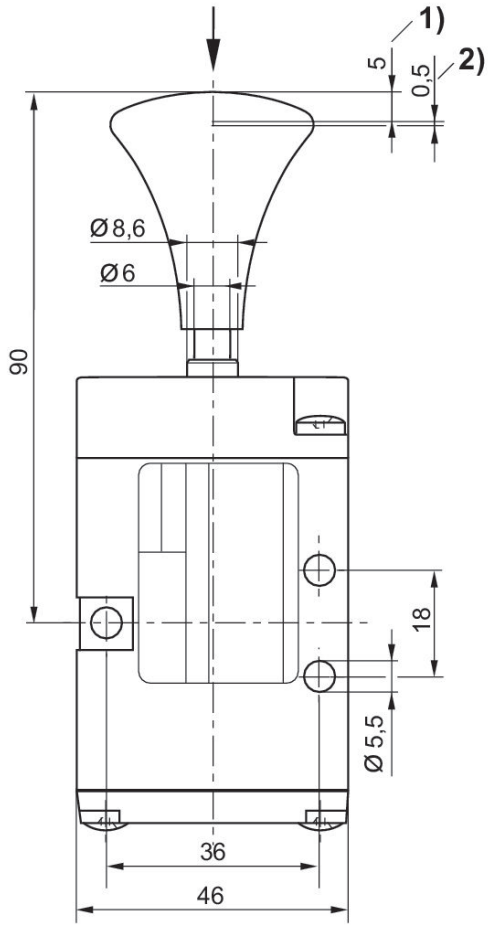

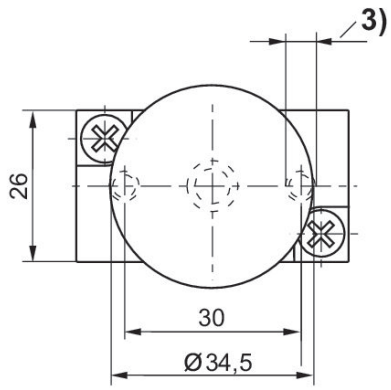

1) Stroke
2) Overstroke
3) Ø 4.5 - 12 mm deep

3/2-directional valve, Series CD04, Plunger

Flow: 900 l/min
Activation: Mechanical
Compressed air connection type: Internal thread
Compressed air connection input: 1/8-27 NPTF
Compressed air connection output: 1/8-27 NPTF
Compressed air connection, exhaust: 1/8-27 NPTF
Ambient temperature min./max.: -20 °C ... 65 °C
Medium temperature min./max.: -20 °C ... 65 °C
Working pressure min./max.: -0.95 bar ... 10 bar



	Min. actuating force [N]	Function	Min. ambient temperature [°C]	Max. ambient temperature [°C]	Part No.
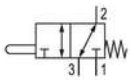	60	NC/NO	-20	65	R412013026
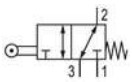	30	NC/NO	-20	65	R412013021
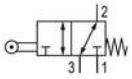	30	NC/NO	-20	65	R412013022
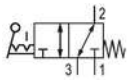	15	NC/NO	-20	65	R412013025
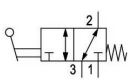	15	NC/NO	-20	65	R412013023
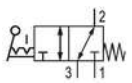	15	NC/NO	-20	65	R412013024
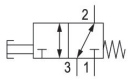	60	NC/NO	-20	65	R412013027

Dimensions in inches
Fig. 1

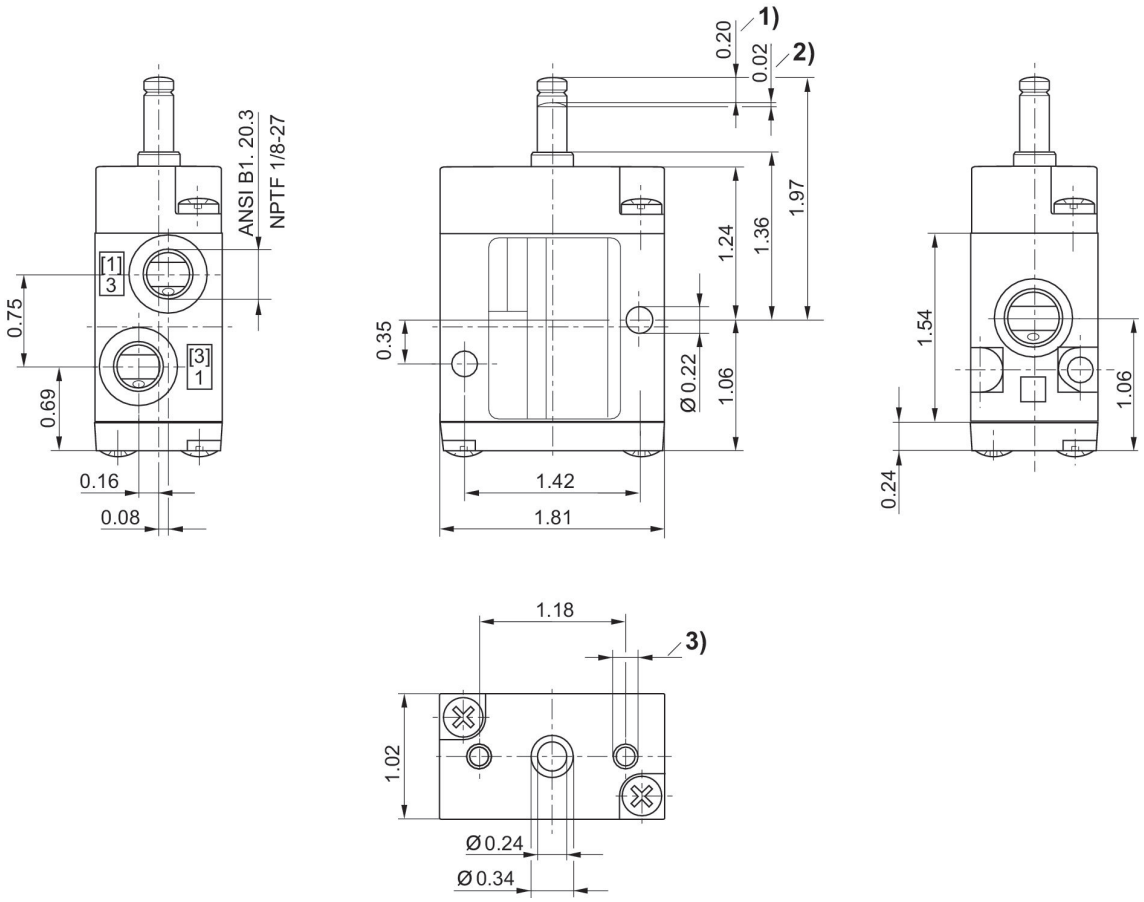

1) Stroke 2) Overstroke 3) Ø 0.18 - 0.47 mm deep

Dimensions in inches
Fig. 2

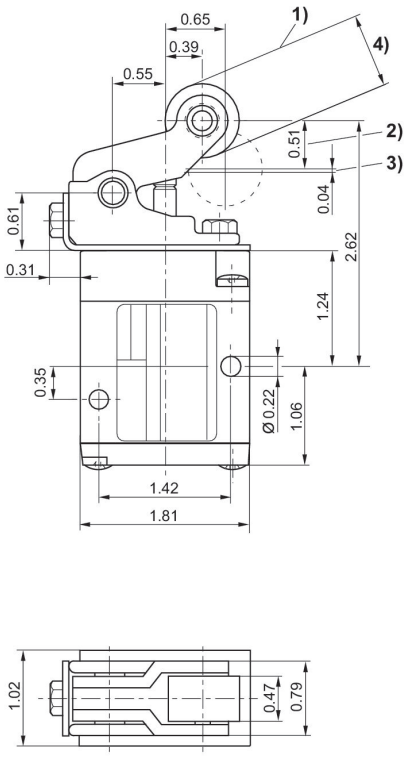

1) approach angle of rollers max. 30° 2) stroke 3) overstroke
4) R412013021: Ø 0,79 (POM) / R412013022: Ø 0,75 (ST)

Dimensions in inches
Fig. 3

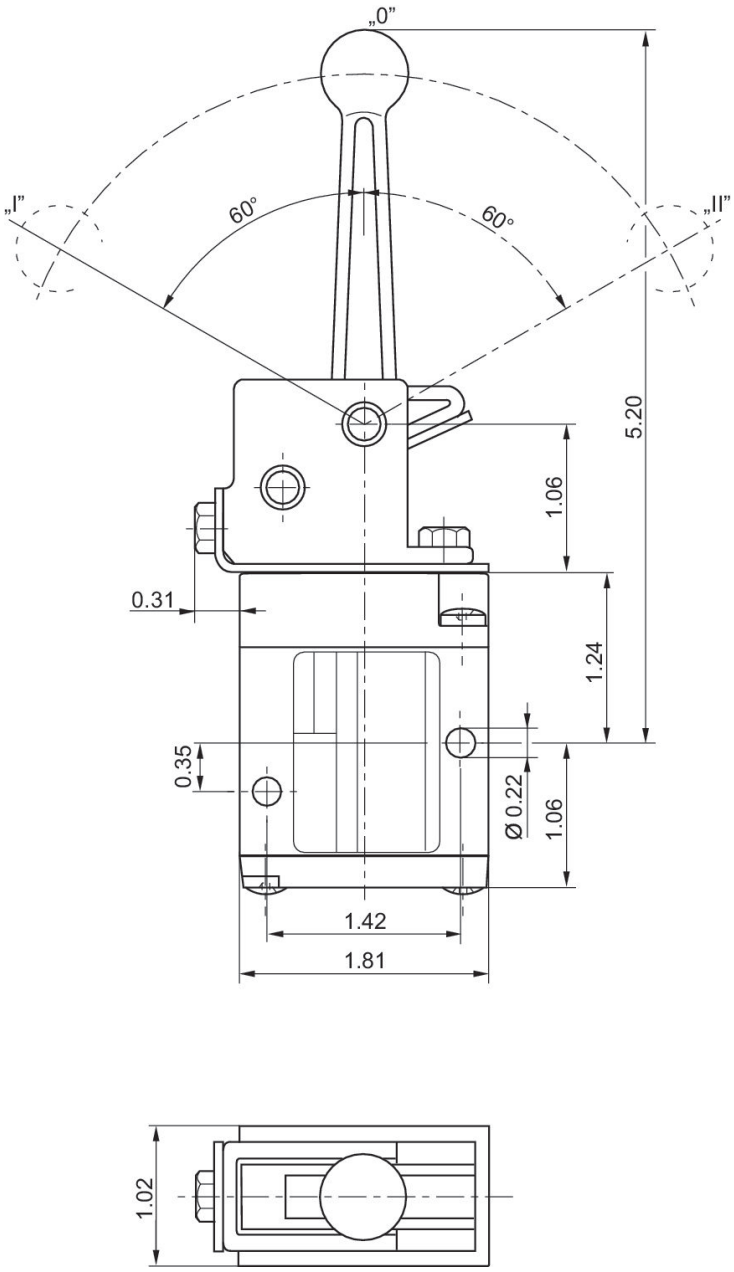

Position 0: initial position, position I: with detent, manual return, position II: automatic spring return

Dimensions in inches
Fig. 4

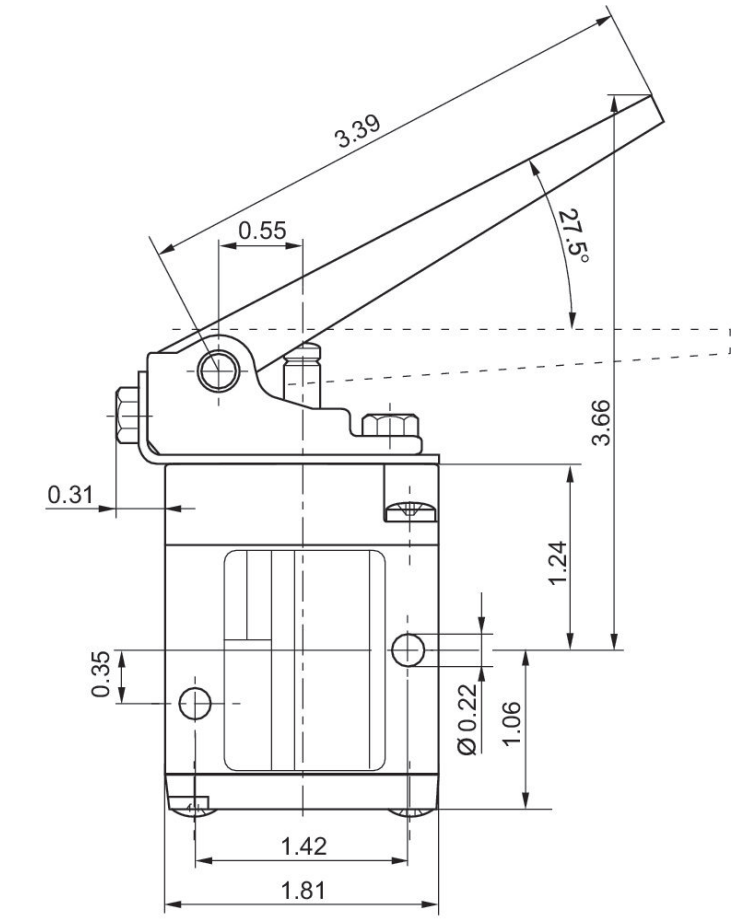

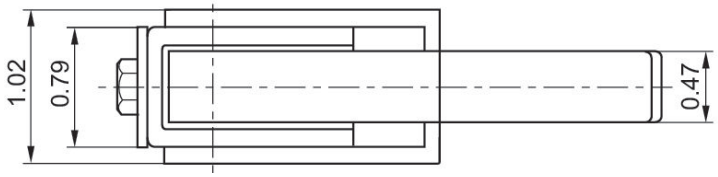

Dimensions of basic valve apply to all types of actuation.

Dimensions in inches
Fig. 5

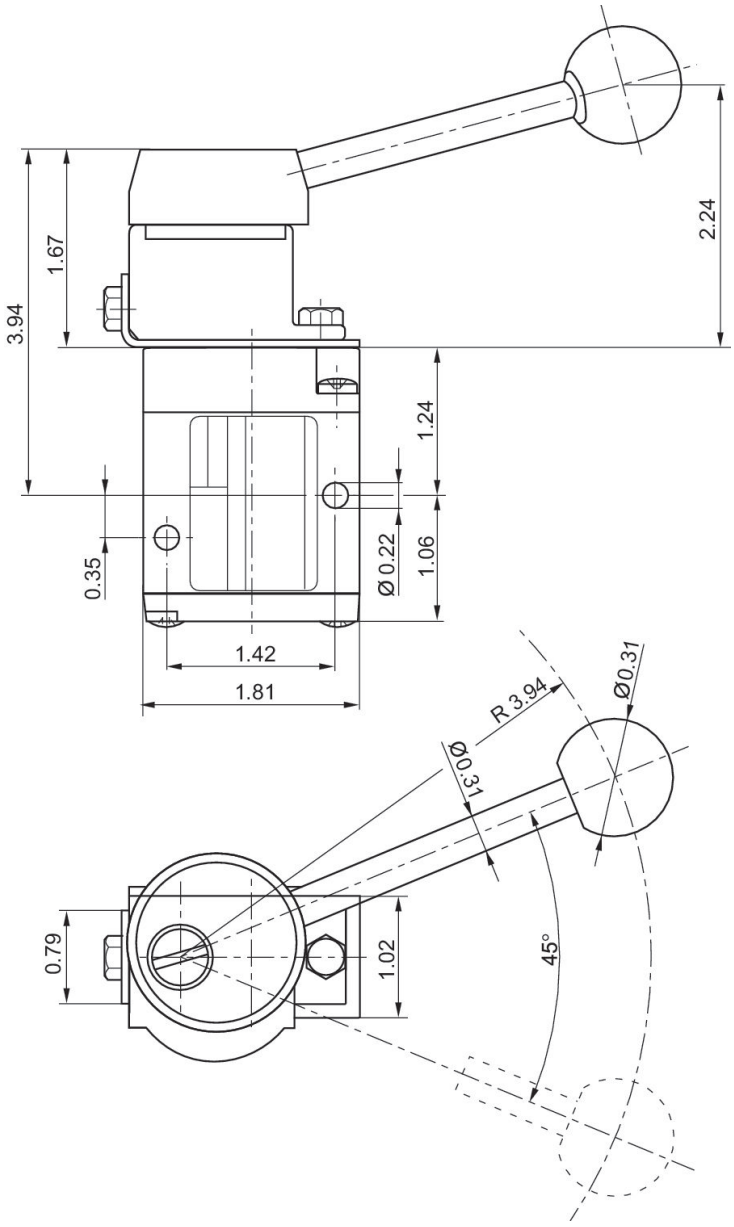

Dimensions of basic valve apply to all types of actuation.

Dimensions in inches
Fig. 6

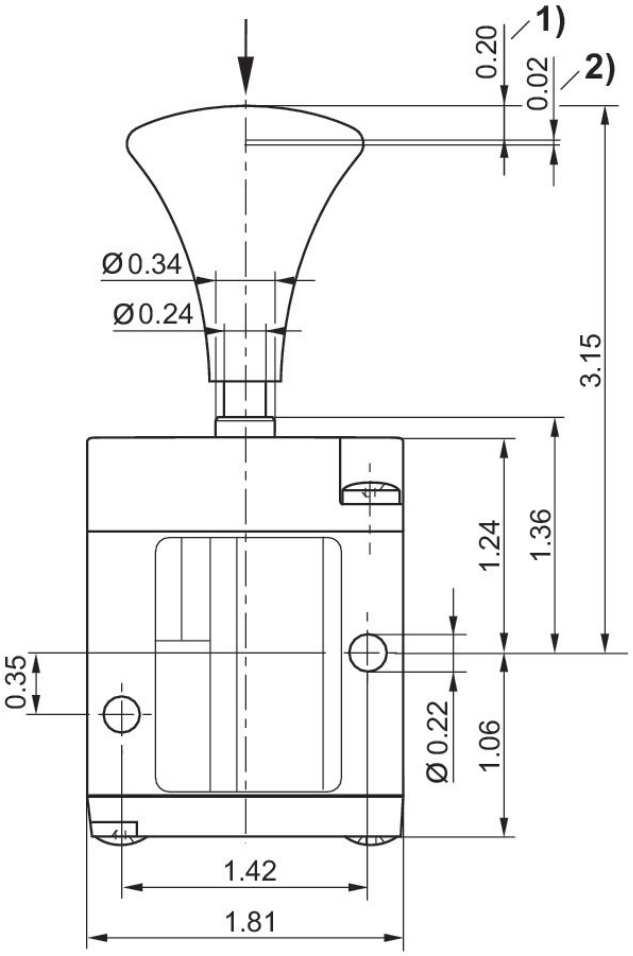

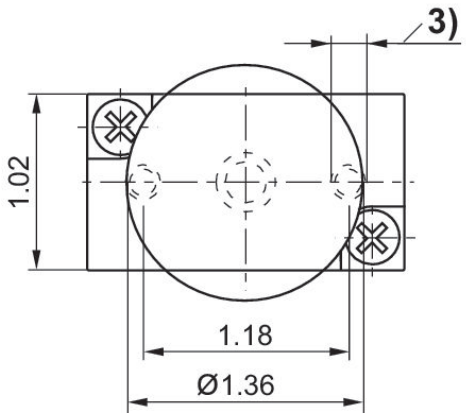

1) Stroke 2) Overstroke 3) Ø 0.18 - 0.47 mm deep

5/2-directional valve, Series CD04, Plunger

Flow: 900 l/min
Activation: Mechanical
Compressed air connection type: Internal thread
Compressed air connection input: 1/8-27 NPTF
Compressed air connection output: 1/8-27 NPTF
Compressed air connection, exhaust: 1/8-27 NPTF
Ambient temperature min./max.: -20 °C ... 65 °C
Medium temperature min./max.: -20 °C ... 65 °C
Working pressure min./max.: -0.95 bar ... 10 bar



	Min. actuating force [N]	Min. ambient temperature [°C]	Max. ambient temperature [°C]	Part No.
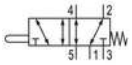	70	-20	65	R412013032
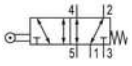	35	-20	65	R412013028
	15	-20	65	R412013031
	60	-20	65	R412013029
	20	-20	65	R412013030
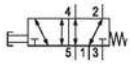	70	-20	65	R412013033

Dimensions in inches
Fig. 1

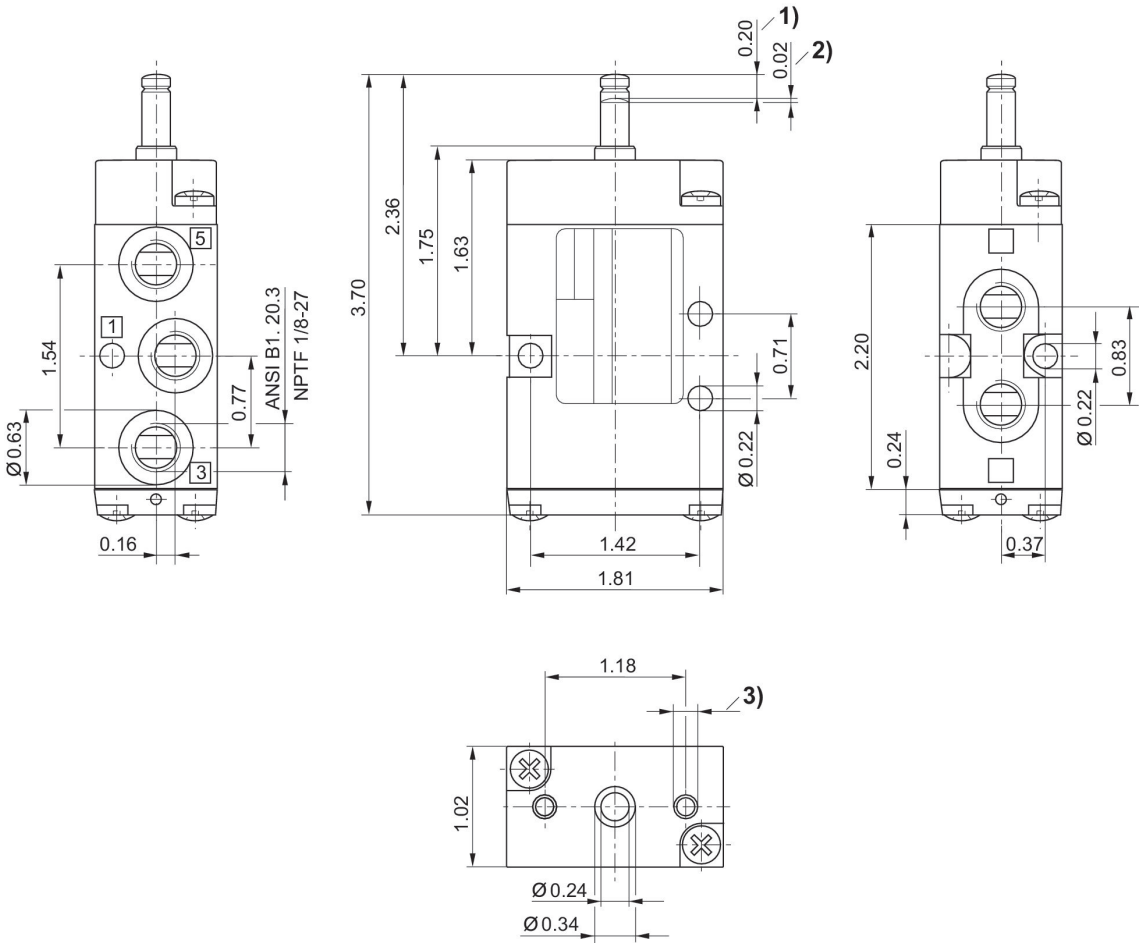

1) Stroke 2) Overstroke 3) Ø 0.18 - 0.47 mm deep

Dimensions in inches
Fig. 2

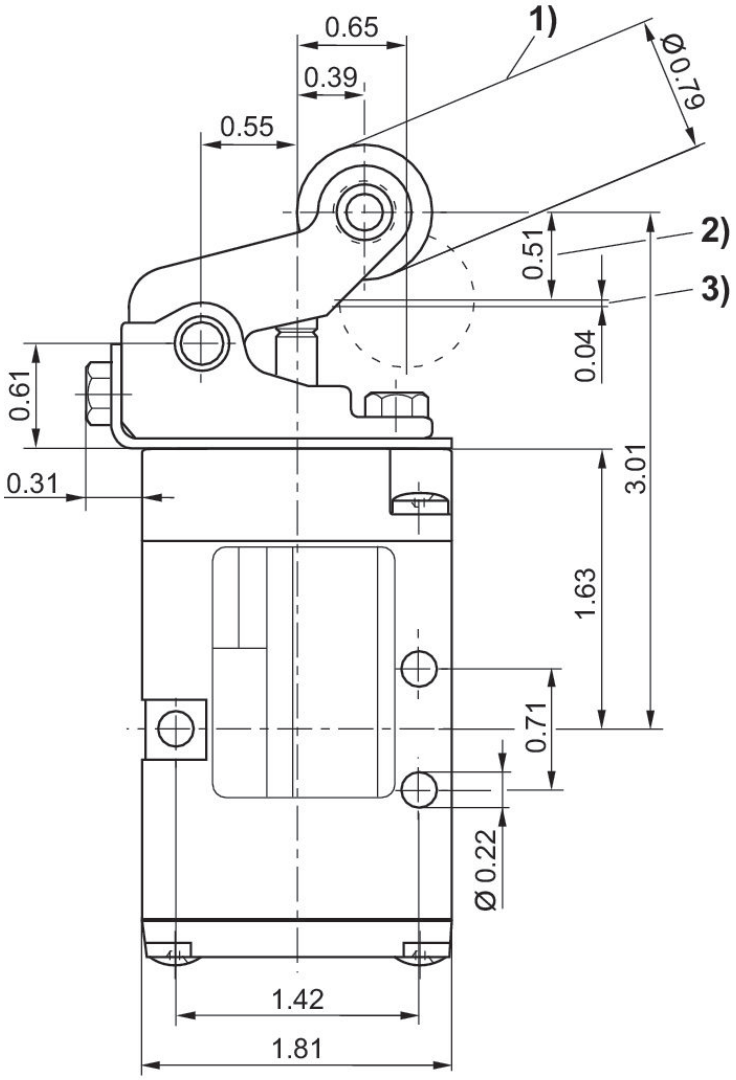

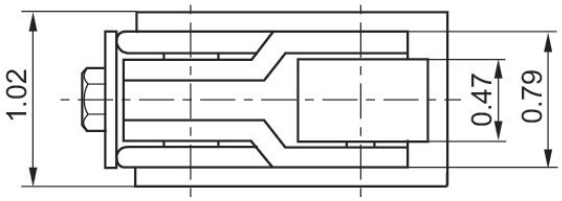

1) approach angle of rollers max. 30° 2) stroke 3) overstroke

Dimensions in inches
Fig. 3

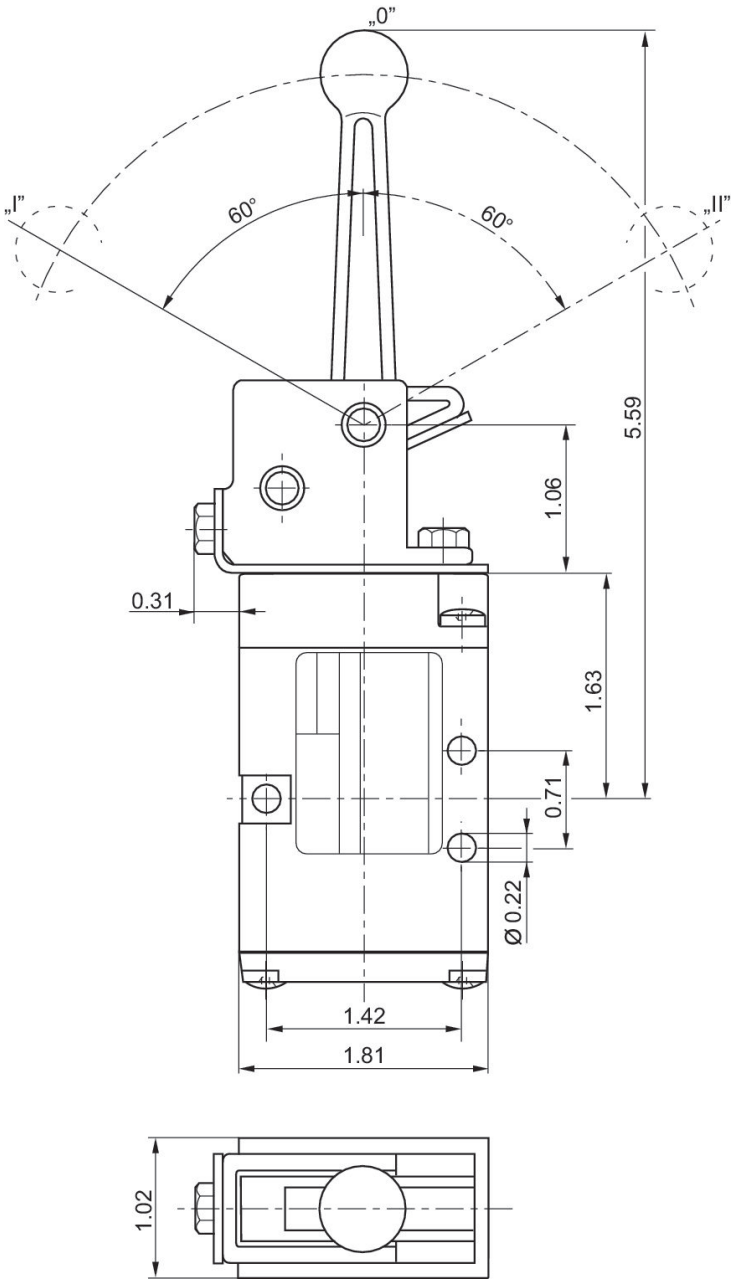

Position 0: initial position, position I: with detent, manual return, position II: automatic spring return

Dimensions in inches
Fig. 4

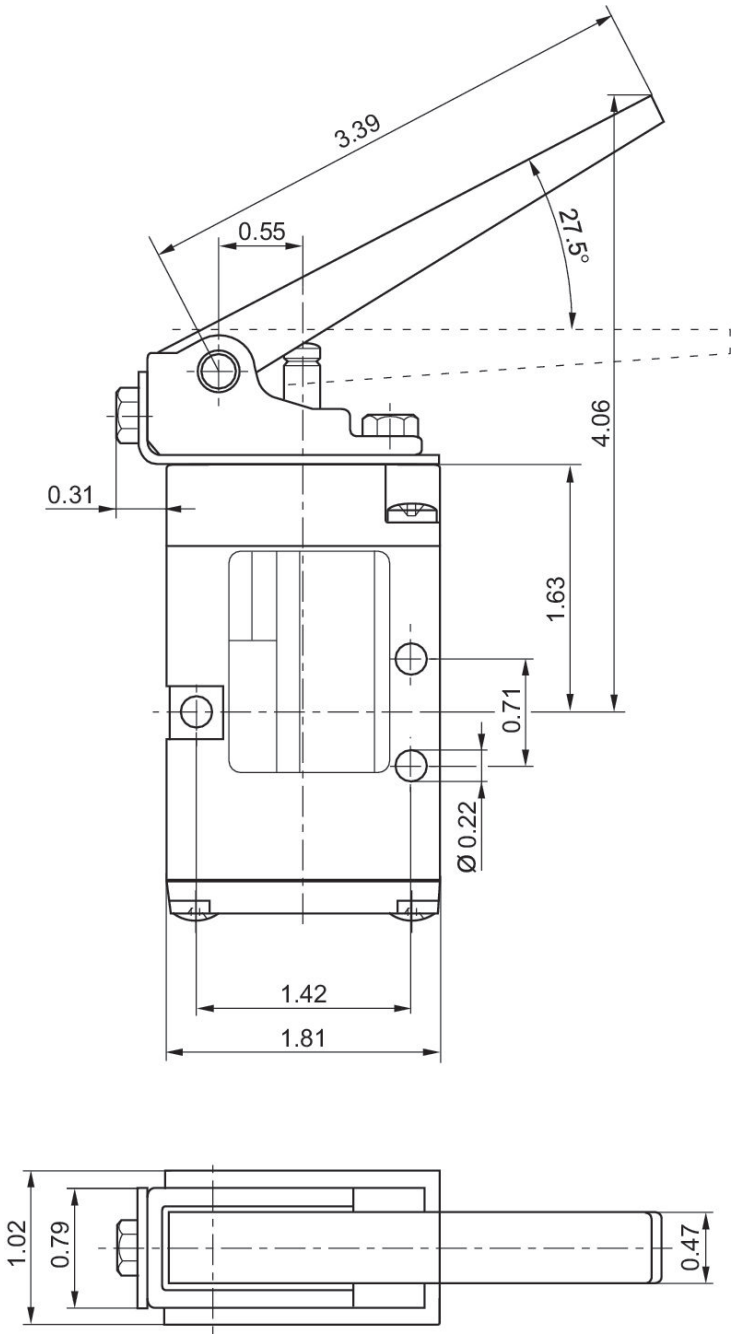

Dimensions in inches
Fig. 5

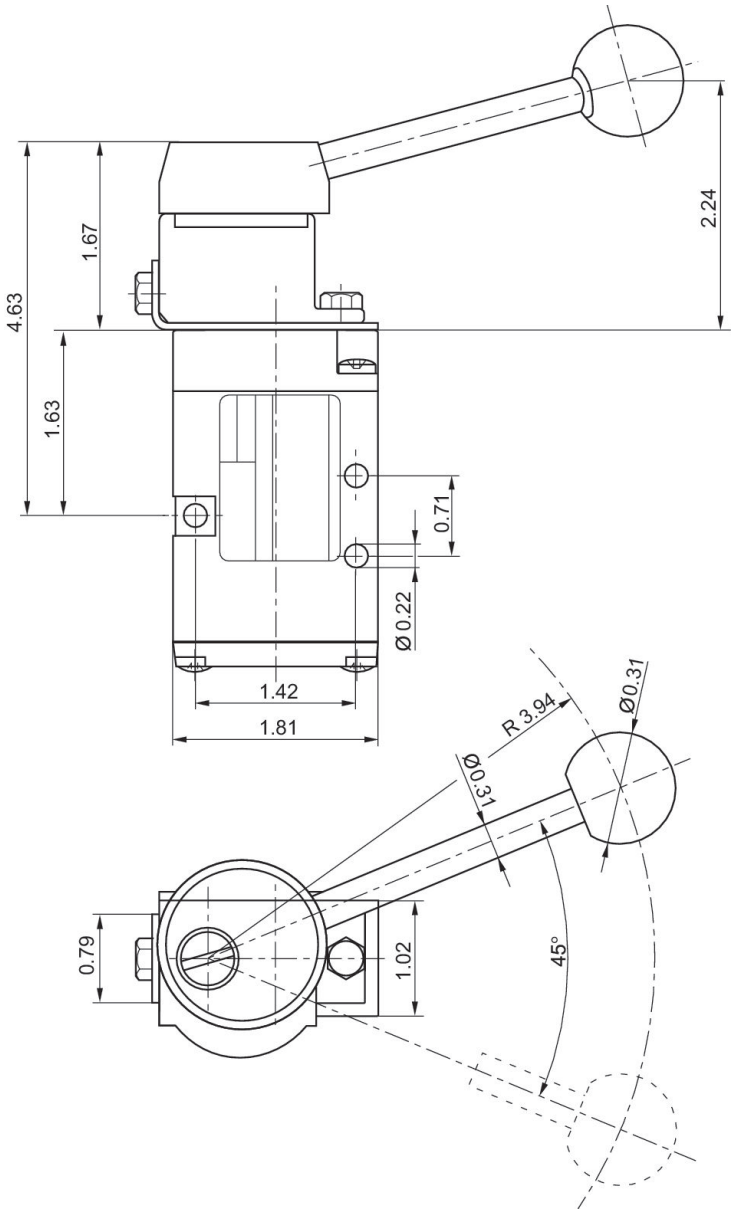

Dimensions in inches
Fig. 6

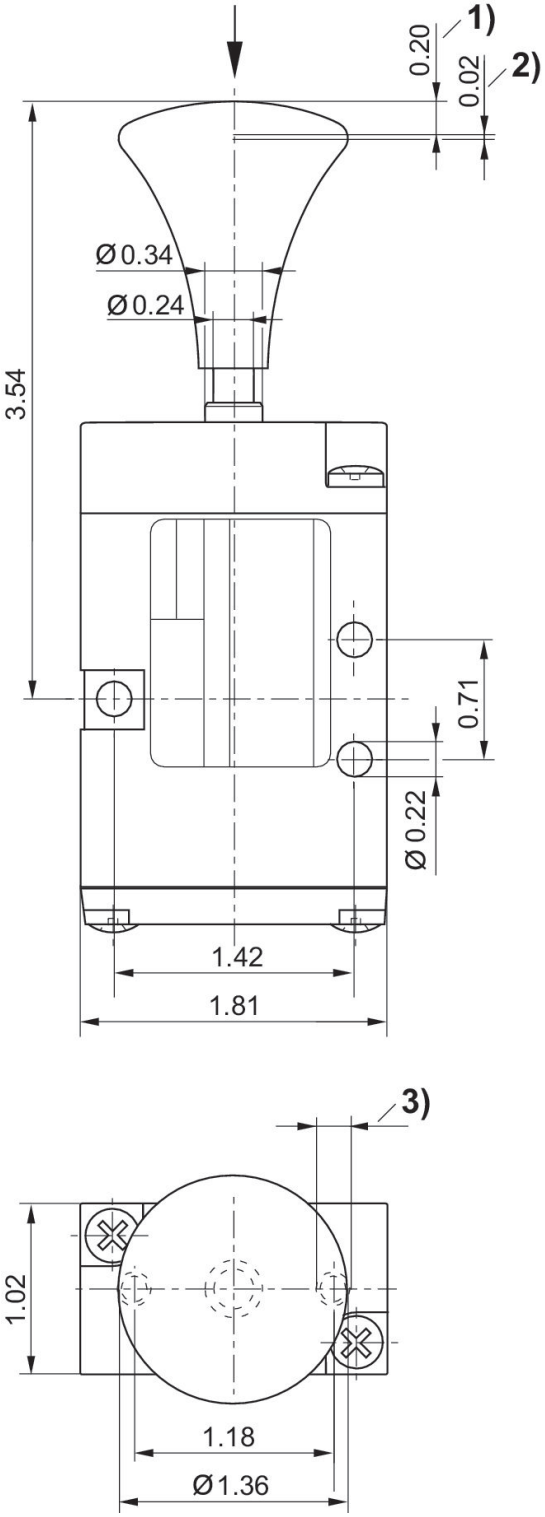

1) Stroke 2) Overstroke 3) Ø 0.18 - 0.47 mm deep

Valve plug connector, series CON-VP, Form B, 24 V AC/DC

Electrical connection 1: EN 175301-803, form B
Ambient temperature min./max.: -40 °C ... 90 °C



	Operational voltage	Protective circuit	Max. current [A]	Contact assignment	LED status display	min. suitable cable Ø [mm]	max. suitable cable Ø [mm]	Part No.
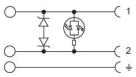	24 V AC/DC	2 Z-diodes	1.5	2+E	Yellow	4	8	1834484104

Dimensions

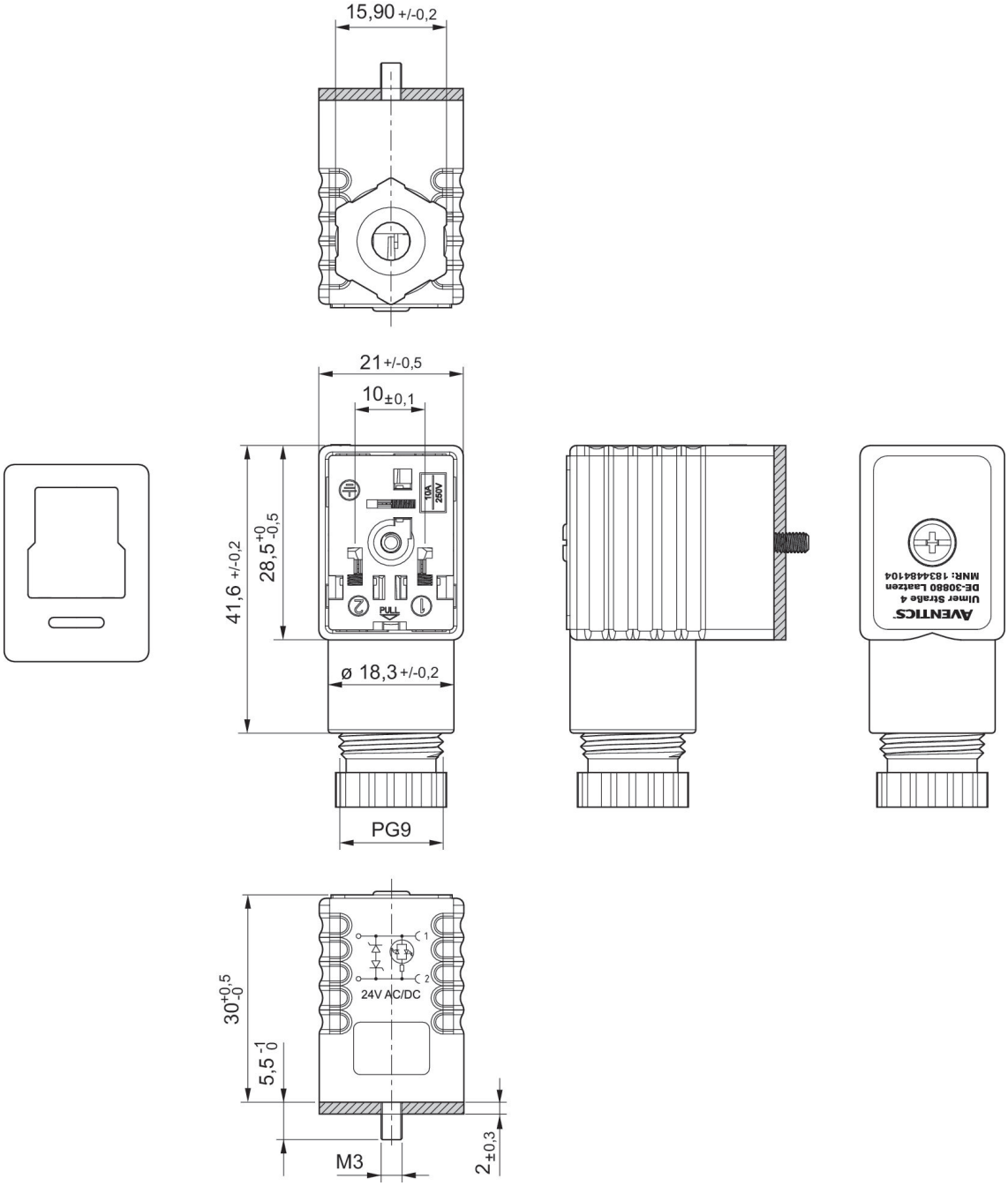

Profile seal

Valve plug connector, series CON-VPP, Form B, 115/230 V AC/DC, LED

Electrical connection 1: EN 175301-803, form B
Ambient temperature min./max.: -40 °C ... 90 °C



	Operational voltage	Protective circuit	Max. current [A]	Contact assignment	LED status display	min. suitable cable Ø [mm]	max. suitable cable Ø [mm]	Part No.
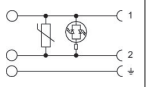	115 V AC/DC	Varistor	1.5	2+E	Red	4	8	1834484105
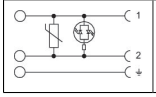	230 V AC/DC	Varistor	1.5	2+E	Red	4	8	1834484106

Dimensions

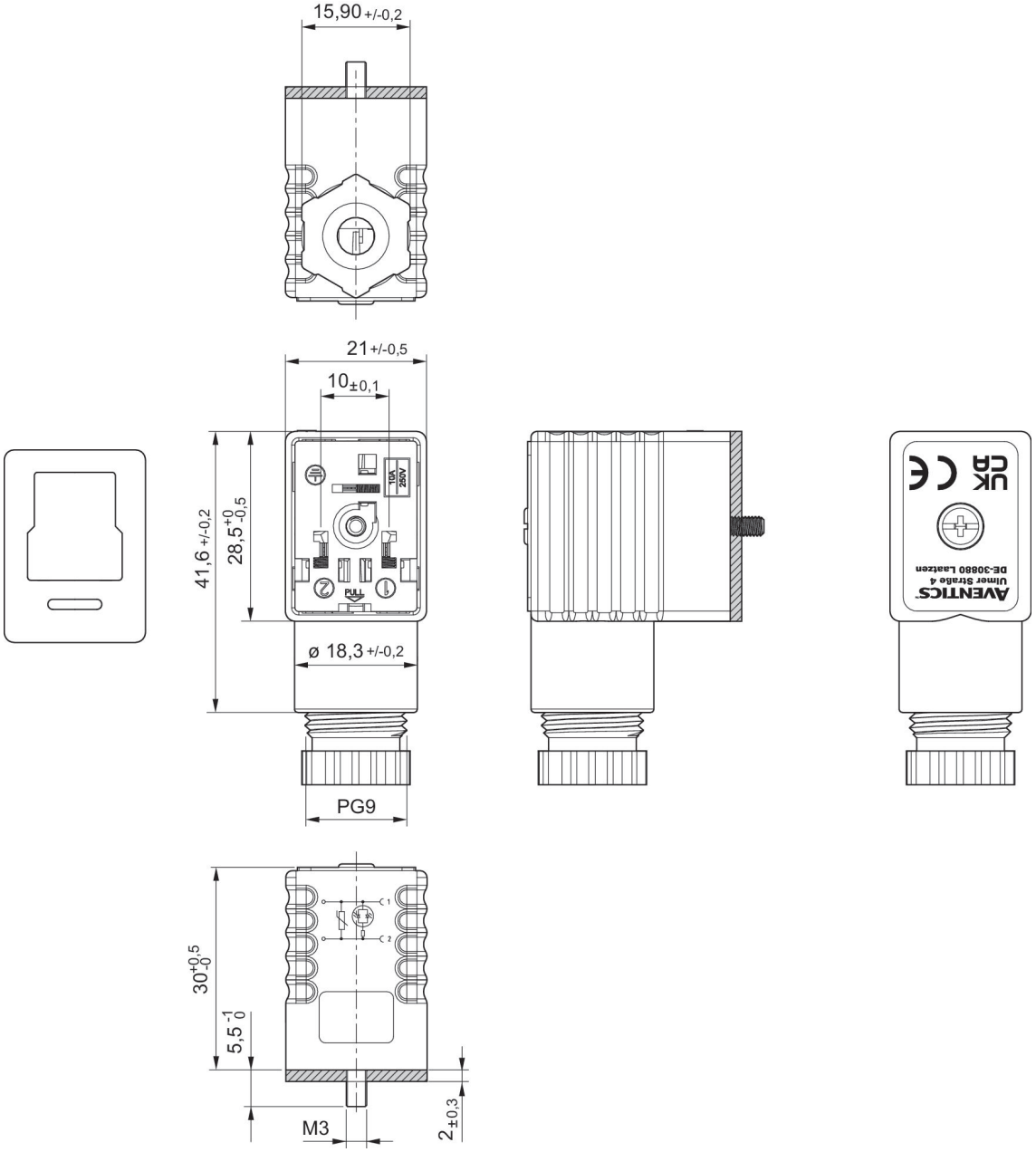

Profile seal

Valve plug connector, series CON-VP, Form B, industry, 300 V DC / 250 V AC

Electrical connection 1: EN 175301-803, form B
Ambient temperature min./max.: -40 °C ... 90 °C



	Operational voltage	Max. current [A]	Contact assignment	min. suitable cable Ø [mm]	max. suitable cable Ø [mm]	Part No.
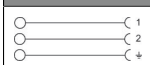	300 V DC / 250 V AC	10	2+E	4	8	1834484096

Dimensions

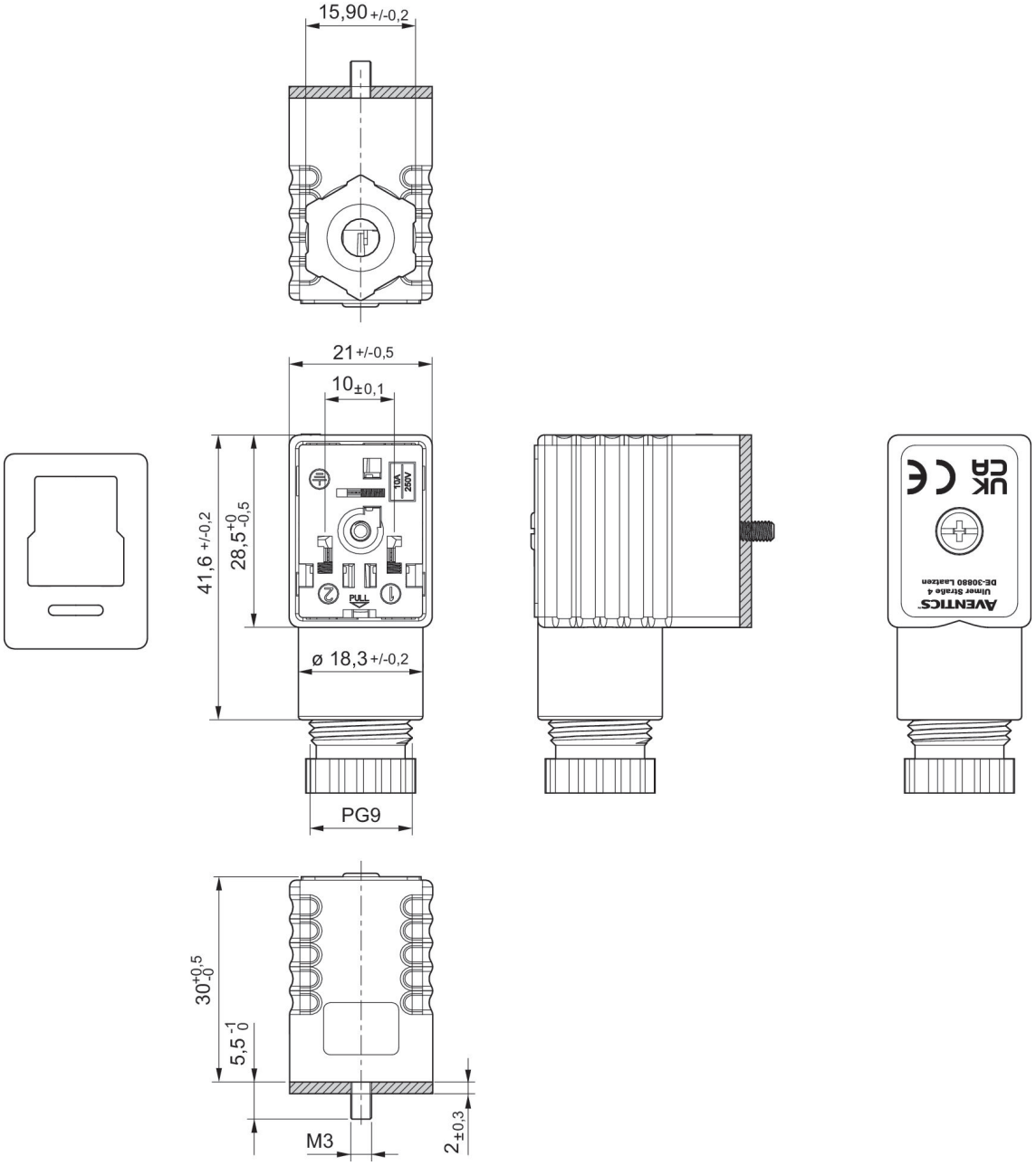

Profile seal

Valve plug connector with cable series CON-VP, Form B, 0° female insert

Electrical connection 1: Socket ... Form B ... 2+E ... angled 90°
Electrical connection 2: open cable ends ... 3-pin
Protective circuit: Z-diode
Ambient temperature min./max.: -20 °C ... 80 °C



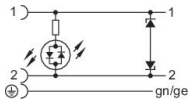

Operational voltage	Protective circuit	Max. current [A]	Contact assignment	LED status display	Cable-Ø [mm]	Cable length [m]	Part No.
24 V AC/DC	Z-diode	10	2+E	Yellow	5.9	3	1834484152
24 V AC/DC	Z-diode	10	2+E	Yellow	5.9	5	1834484154

Dimensions

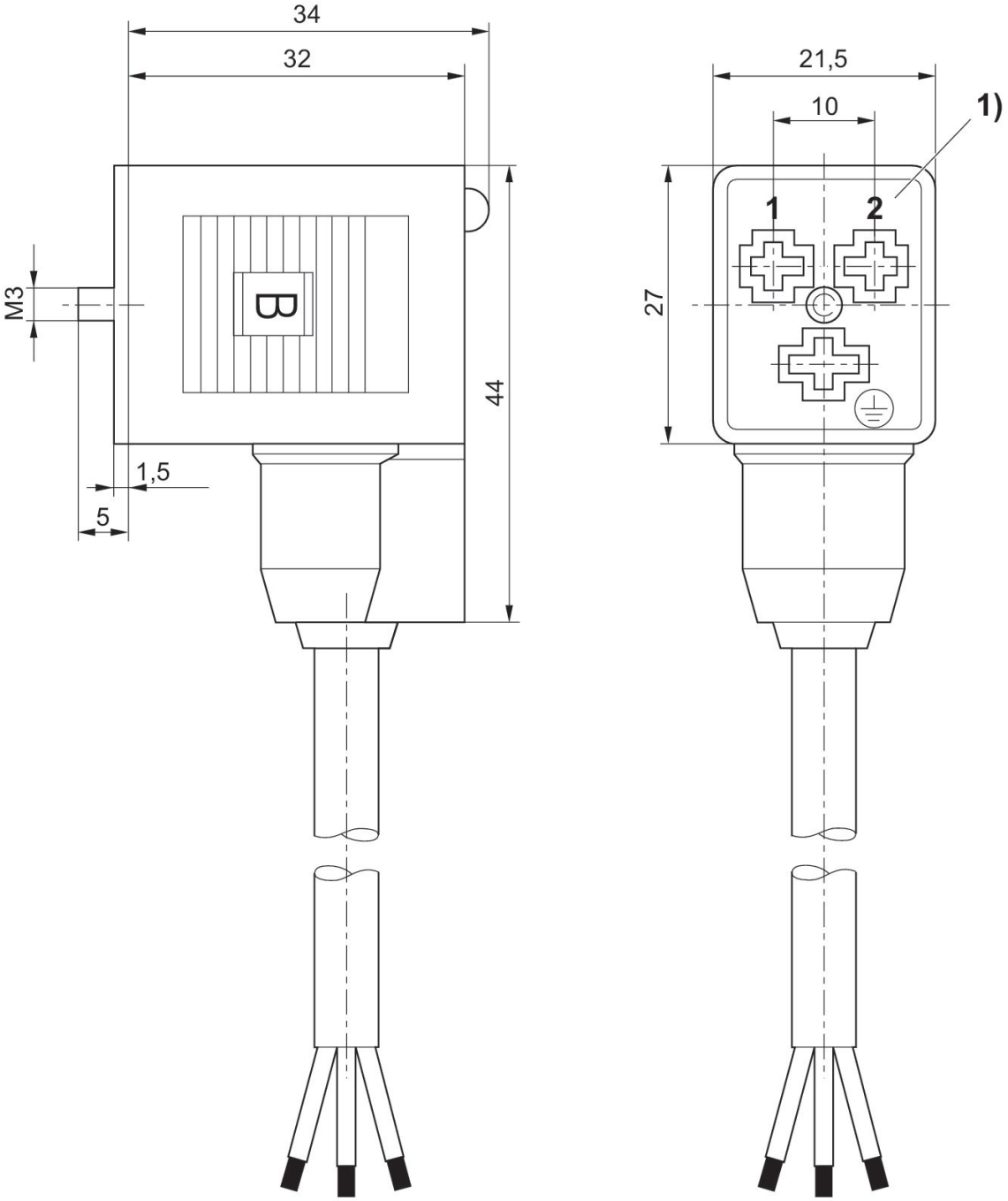

1) 0° female insert

Valve plug connector with cable series CON-VP,, 180° female insert

Electrical connection 1: Socket ... Form B ... 2+E ... angled 90°
Electrical connection 2: open cable ends ... 3-pin
Protective circuit: Z-diode
Ambient temperature min./max.: -20 °C ... 80 °C



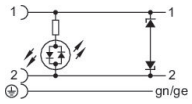

Operational voltage	Protective circuit	Max. current [A]	Contact assignment	LED status display	Cable-Ø [mm]	Cable length [m]	Part No.
24 V AC/DC	Z-diode	10	2+E	Yellow	5.9	3	1834484153
24 V AC/DC	Z-diode	10	2+E	Yellow	5.9	5	1834484155

Dimensions

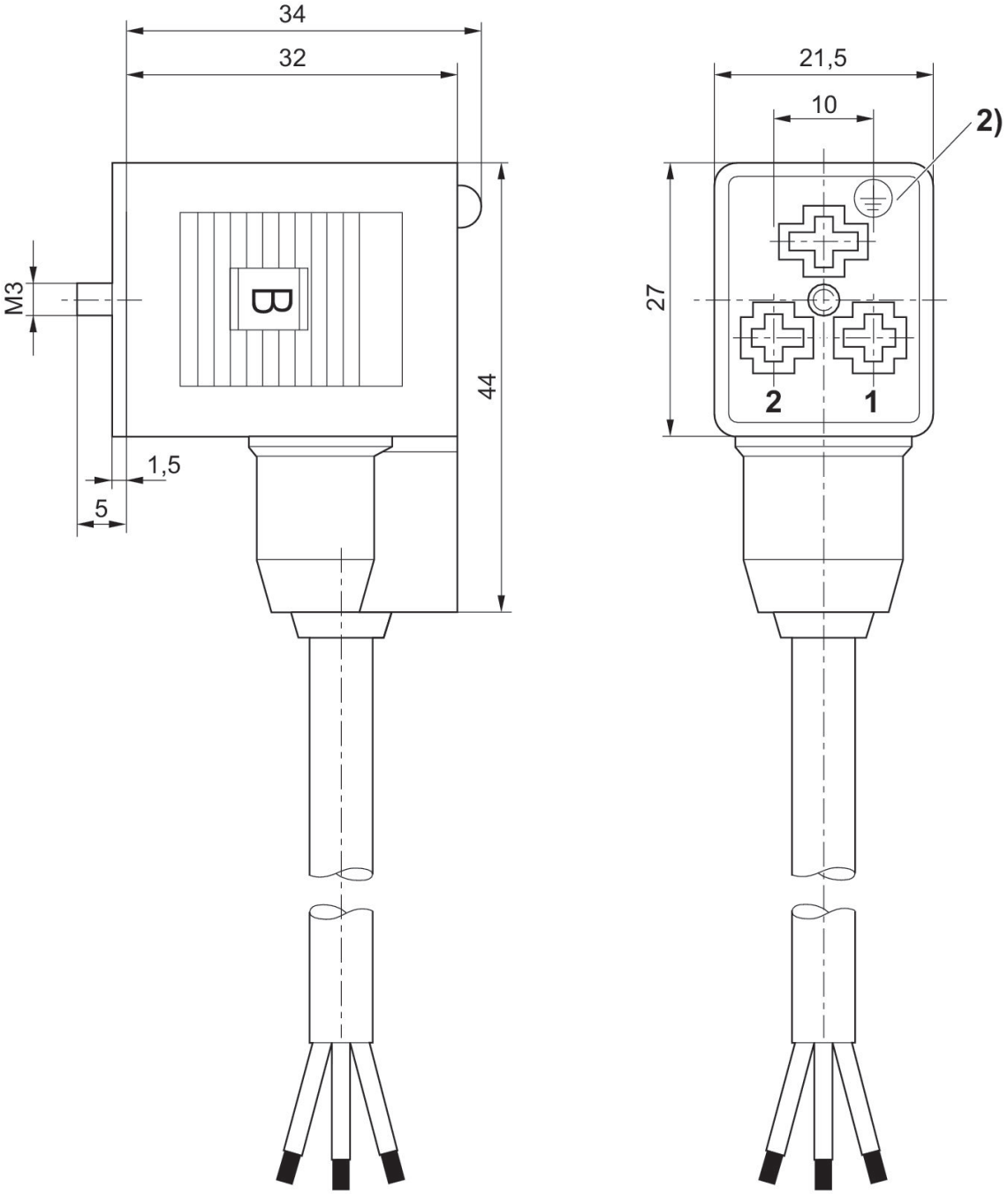

2) 180° female insert

Coil, Series CO2, form B, class F, polyamide

Coil width: 22 mm
Electrical connection 2, thread size: Form B
Coil insulation class: Class F
Electrical connection 2, number of poles: 3-pin
: Ambient temperature: -25 ... 60°C
Ambient temperature min./max.: -25 °C ... 60 °C
Medium temperature min./max.: -25 °C ... 60 °C





Operational voltage DC	Operational voltage AC at 50 Hz	Operational voltage AC at 60 Hz	Voltage tolerance	Power consumption DC [W]	Holding power AC 50 Hz [VA]	Holding power AC 50 Hz	Holding power AC 60 Hz	Part No.
24 V			-10 % / +10 %	2.8				549526-002-1A
12 V	24 V	24 V	-10 % / +10 %	4.8				549526-004-1A
24 V	48 V	48 V	-10 % / +10 %	4.8				549526-006-1A
48 V			-10 % / +10 %	4.8				549526-007-1A
60 V	110 V	110 V / 115 V	-10 % / +10 %	6	8.5			549526-010-1A
	220 V / 230 V	230 V / 240 V	-10 % / +10 %			7,5 VA / 8,5 VA	7 VA / 7,5 VA	549526-013-1A

Switch-on power AC 50 Hz [VA]	Switch-on power AC 50 Hz	Compatibility index	Part No.
		43	549526-002-1A
	10,9 VA	44	549526-004-1A
	11 VA	44	549526-006-1A
		44	549526-007-1A
12.1		45	549526-010-1A
	11 VA / 12,1 VA	45	549526-013-1A

Dimensions

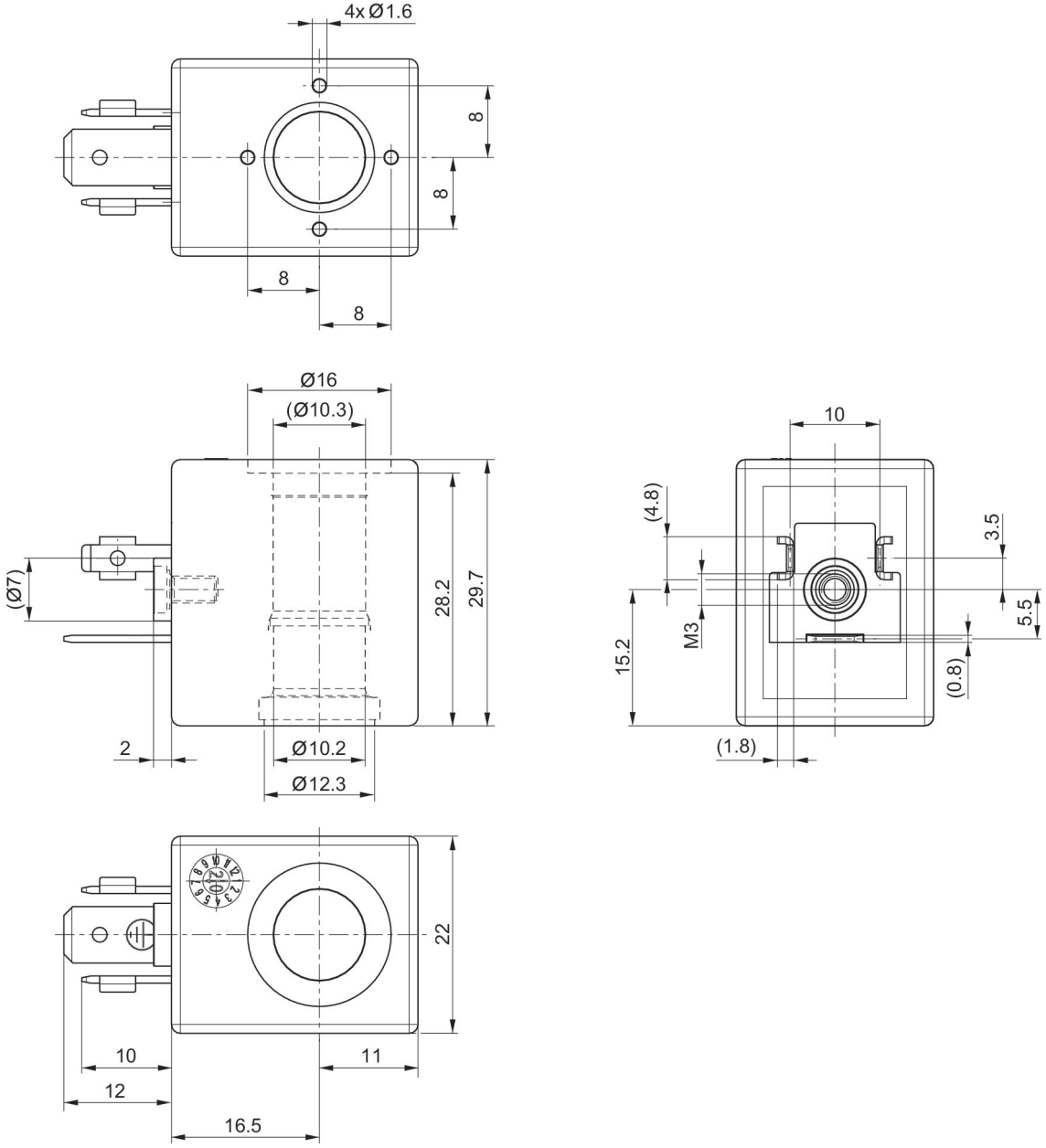
4x Ø1.6
8
8
8
8
Ø16
(Ø10.3)
(Ø7)
28.2
29.7
2
Ø10.2
Ø12.3
10
(4.8)
3.5
5.5
M3
15.2
(0.8)
(1.8)
22
10
11
12
16.5

R, P, S subbase, Series CD04



Min. ambient temperature [°C]	Max. ambient temperature [°C]	Compressed air connection input	Compressed air connection, exhaust	Compressed air connection pilot air	Max. number of valve positions	Part No.
-25	80	G 3/8	G 3/8	G 1/8	4	8985070042
-25	80	G 3/8	G 3/8	G 1/8	6	8985070062
-25	80	G 3/8	G 3/8	G 1/8	8	8985070082
-25	80	G 3/8	G 3/8	G 1/8	10	8985070102
-25	80	G 3/8	G 3/8	G 1/8	12	8985070122

Dimensions

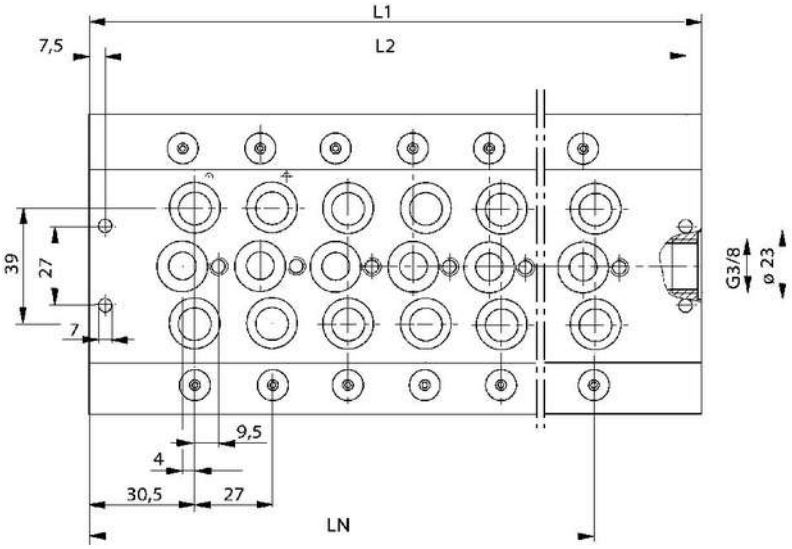

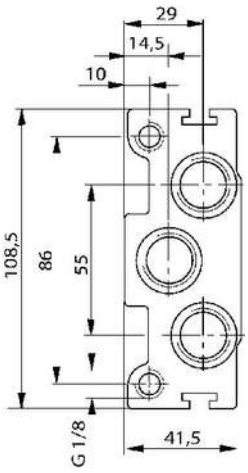

Order 3354800092 coupling kit separately

Part No.	L1	L2	LN	Weight
8985070042	142	127	112	
8985070062	196	181	166	
8985070082	250	235	200	
8985070102	304	289	274	
8985070122	358	343	328	

Manifold strip, Series CD04

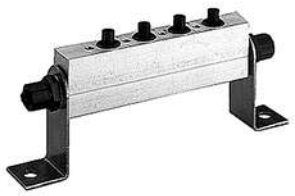

Min. ambient temperature [°C]	Max. ambient temperature [°C]	Compressed air connection input	Compressed air connection, exhaust	Max. number of valve positions	Part No.
-25	80	Ø 10x1	Ø 10x1	2	3337110222
-25	80	Ø 10x1	Ø 10x1	3	3337110232
-25	80	Ø 10x1	Ø 10x1	4	3337110242
-25	80	Ø 10x1	Ø 10x1	5	3337110252
-25	80	Ø 10x1	Ø 10x1	6	3337110262
-25	80	Ø 10x1	Ø 10x1	7	3337110272
-25	80	Ø 10x1	Ø 10x1	8	3337110282
-25	80	Ø 10x1	Ø 10x1	9	3337110292
-25	80	Ø 10x1	Ø 10x1	10	3337110302
-25	80	Ø 10x1	Ø 10x1	11	3337110312
-25	80	Ø 10x1	Ø 10x1	12	3337110322

Dimensions

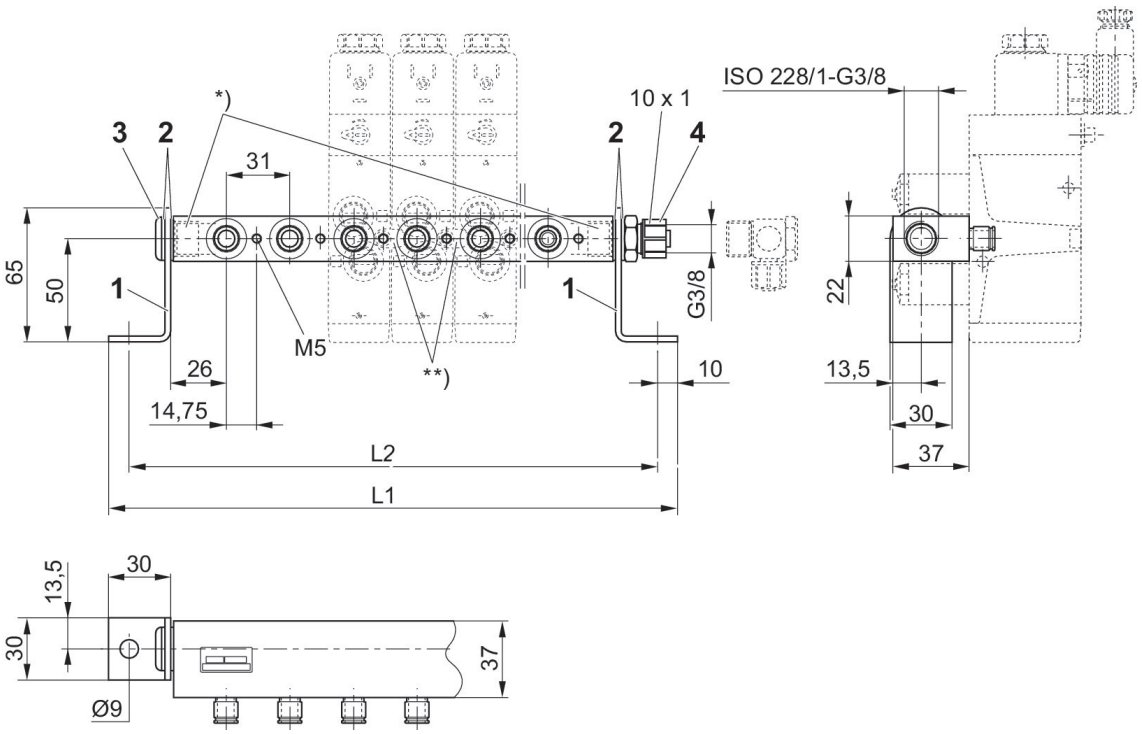

Angled bracket (1), seal DIN 7603 Al (2), blanking screw G 3/8 ISO 228/1 (3), push-in fittings G 3/8 ISO 228/1, diameter 10x1 (4)
* Only use fittings with max. length of thread engagement equal to 12 mm.
** Connection kit 3354600002 for 5/2- and 5/3-directional valves
Valve mounting screws (depending on the valve used): washer, screw, O-ring must be ordered separately.

Part No.	L1	L2
3337110222	142	122
3337110232	169	149
3337110242	196	176
3337110252	223	203
3337110262	250	230
3337110272	277	257
3337110282	304	284
3337110292	331	311
3337110302	358	338
3337110312	385	365
3337110322	412	392

Mounting kit, CD04 series



Type	Weight [kg]	Fig.	Part No.
Mounting kit for 10 valves, delivery includes: 30 seals, 10 washers, and 10 mounting screws.		Fig. 1	3354800092
P plug	0.017	Fig. 2	3354800082
R/S plug	0.022	Fig. 3	3354800072

3354600002

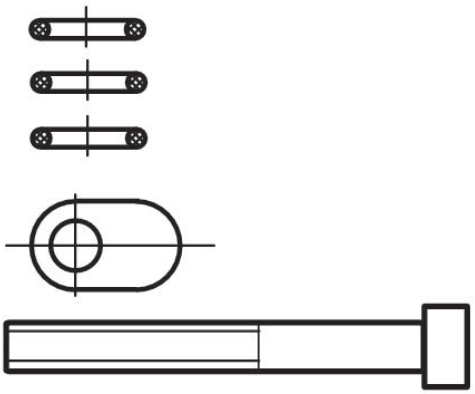

3354600082

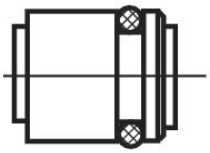

3354600072

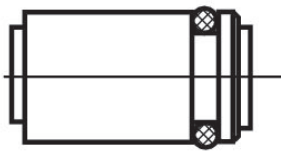

8970810404



Blanking plate



Max. number of valve positions	Part No.
1	3354801004

Dimensions

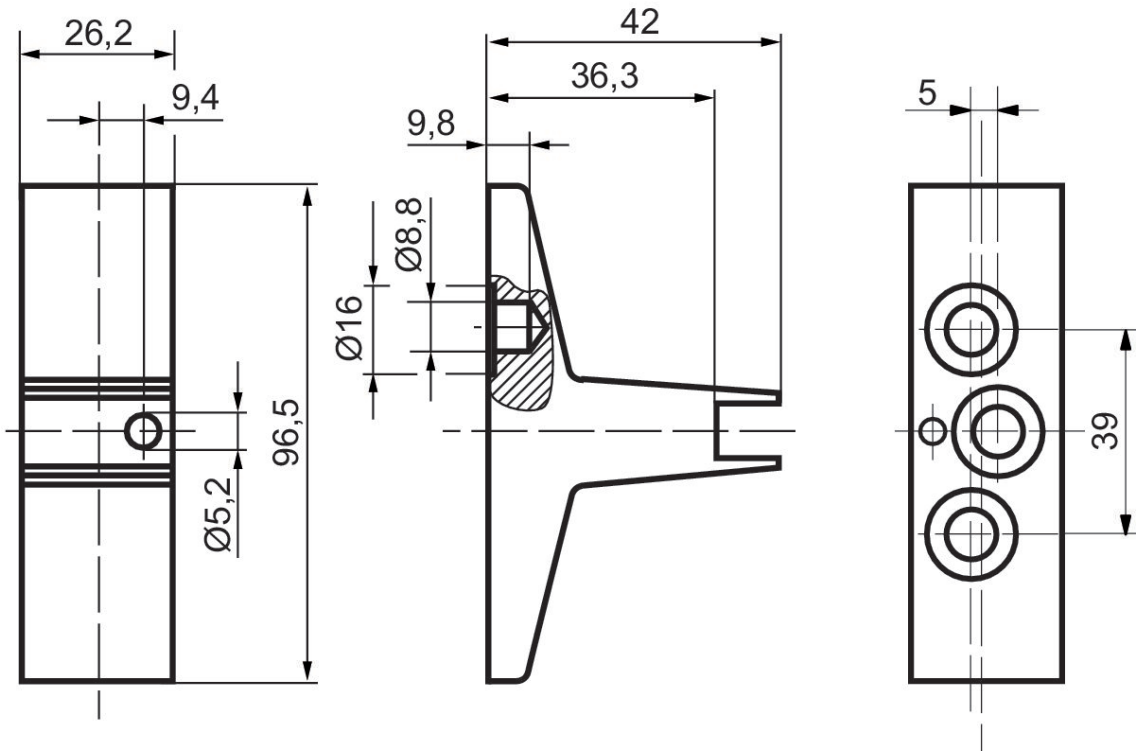

Blanking screw, gasket

Ambient temperature min./max.: -20 °C ... 80 °C
Working pressure min./max.: 0 bar ... 16 bar



G	Delivery unit [piece]	Part No.
G 1/8	25	1823462028
G 1/4	25	1823462029
G 3/8	25	1823462030
G 1/2	25	1823462031
G 3/4	10	1823462032
G 1	5	1823462033

Dimensions

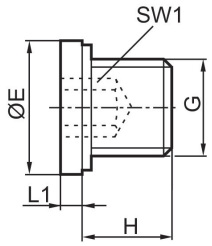

Part No.	Port G	Ø E	H	L1	SW1
1823462028	G 1/8	14	8	3	5
1823462029	G 1/4	18	12	3	6
1823462030	G 3/8	22	12	3	8
1823462031	G 1/2	26	14	4	10
1823462032	G 3/4	32	16	4	12
1823462033	G 1	39	16	5	17

Blanking screw, gasket, M5

Ambient temperature min./max.: -20 °C ... 80 °C
Working pressure min./max.: 0 bar ... 16 bar



G	Delivery unit [piece]	Part No.
M5	25	1823462016

Dimensions

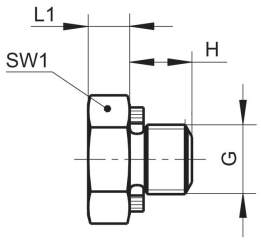

Part No.	Port G	H	L1	SW1
1823462016	M5	4.5	3	8

Silencers, series SI1, Sintered bronze

Compressed air connection type: External thread
Silencer material: Sintered bronze
Ambient temperature min./max.: -25 °C ... 80 °C
Working pressure min./max.: 0 bar ... 10 bar





G	Sound pressure level [dB]	Nominal flow [l/min]	Delivery unit [piece]	Weight [kg]	Part No.
G 1/8	75	1623	10	0.01	1827000000

1827000000

Dimensions in mm

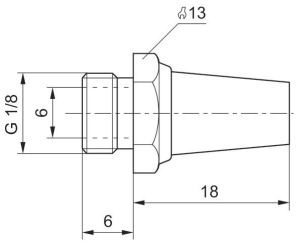

Flow diagram

1827000000

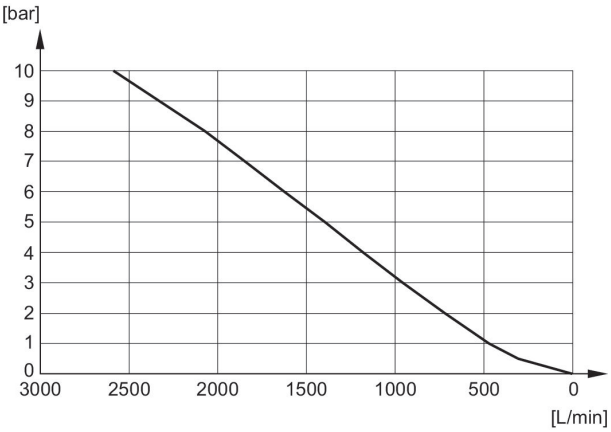

Silencers, series SI1, Sintered bronze

Compressed air connection type: External thread
Silencer material: Sintered bronze
Ambient temperature min./max.: -25 °C ... 80 °C
Working pressure min./max.: 0 bar ... 10 bar





G	Sound pressure level [dB]	Nominal flow [l/min]	Delivery unit [piece]	Weight [kg]	Part No.
G 1/8	85	700	10	0.001	1827000031

Dimensions

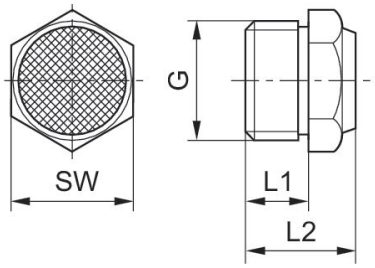

Part No.	Port G	L1	L2	SW
1827000032	M5	5	10.3	7
1827000031	G 1/8	6	11.5	13
1827000033	G 1/4	8	13.5	17
1827000034	G 3/8	10	17.5	22
1827000035	G 1/2	12	19.5	27
8145003400	G 3/4	14	22.5	32
8145001000	G 1	16	22.5	41

Sound pressure level measured at 6 bar at 1 m distance

Flow diagram1827000032

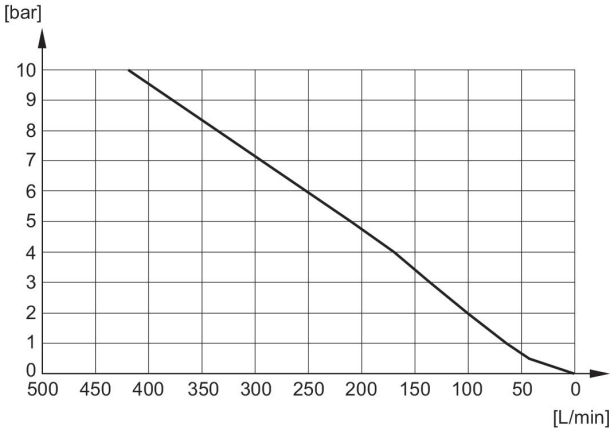

Flow diagram 1827000031

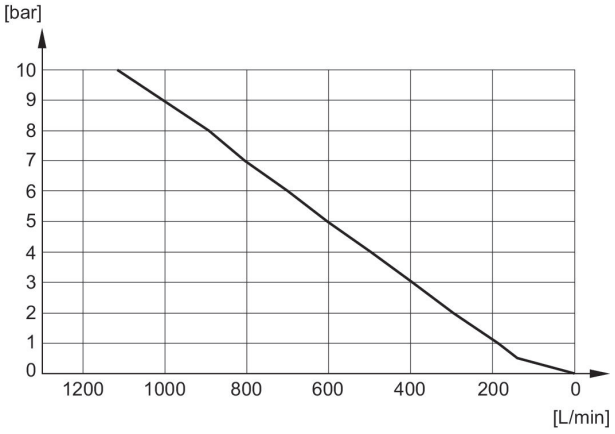

Flow diagram 1827000033

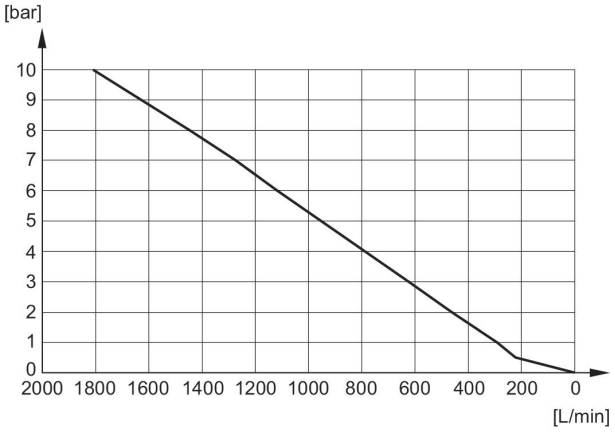

Flow diagram 1827000034

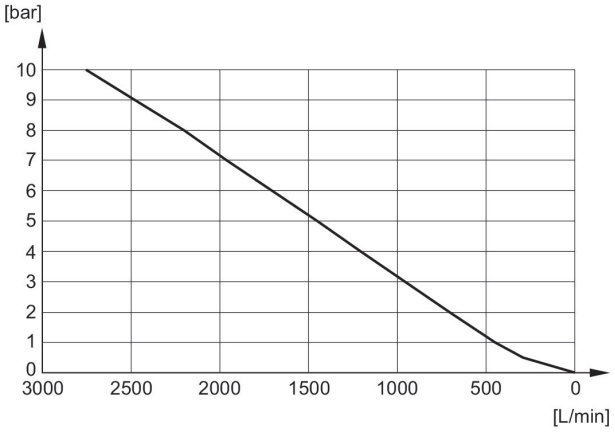

Flow diagram 1827000035

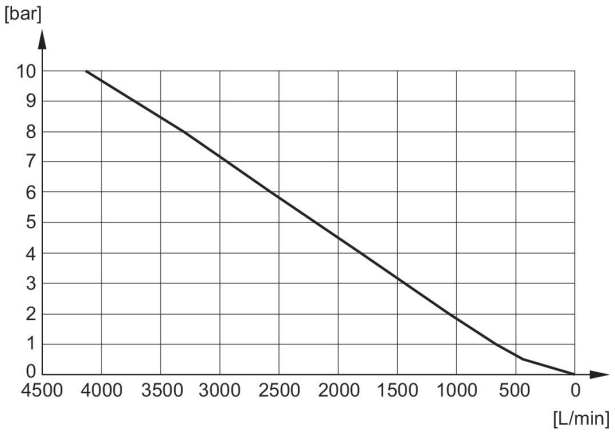

Flow diagram 8145003400

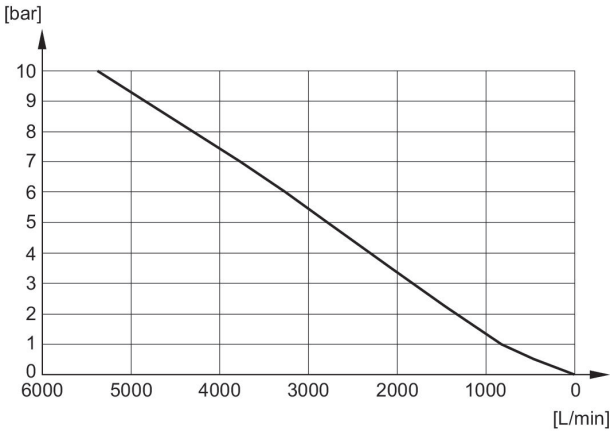

Flow diagram 8145001000

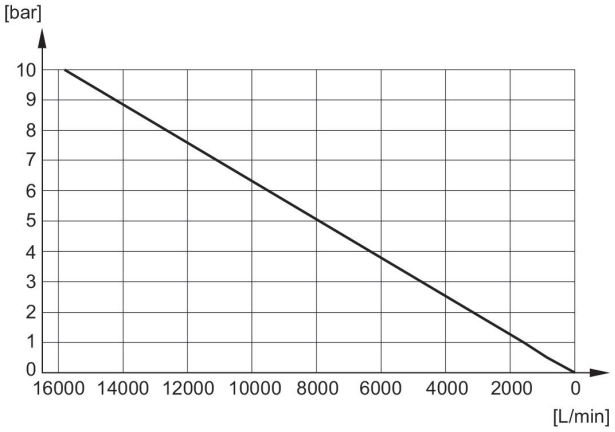

Silencers, series SI1, Sintered bronze

Compressed air connection type: External thread
Silencer material: Sintered bronze
Ambient temperature min./max.: -25 °C ... 80 °C
Working pressure min./max.: 0 bar ... 10 bar





G	Nominal flow [l/min]	Delivery unit [piece]	Part No.
G 1/8	311	10	1827430004

Dimensions

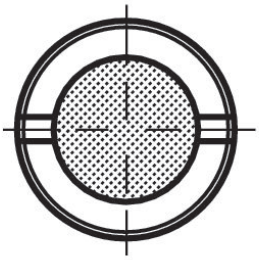

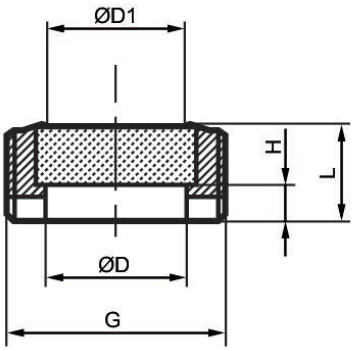

Part No.	Port G	Ø D	Ø D1	H	L
1827430004	G 1/8	6	5	2	4
R414000155	G 1/4	8	6	3	6
R412007875	G 3/8	10	8	3	7
R412007876	G 1/2	15	12	5	9
R412007877	G 3/4	20	17	3.4	8
R412007878	G 1	26	23	5.5	9.5

Flow diagram

1827430004

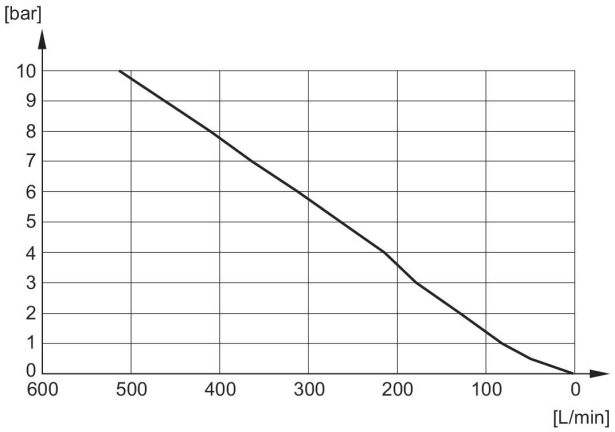

Flow diagram

R414000155

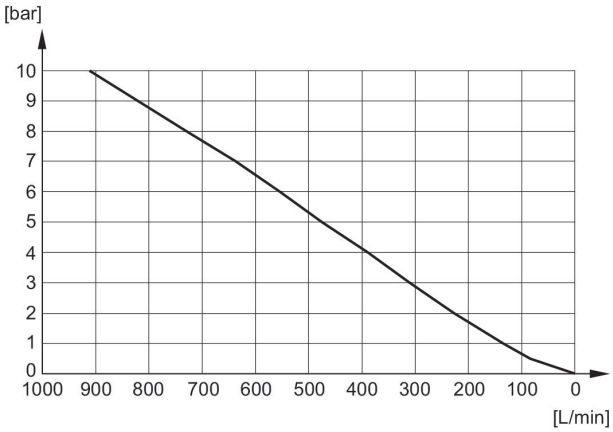

R412007875

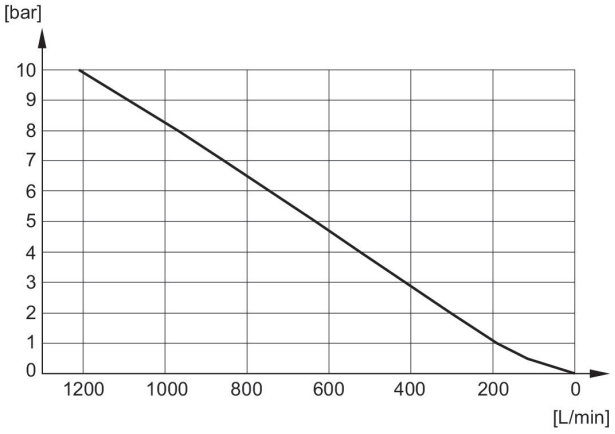

Flow diagram

R412007876

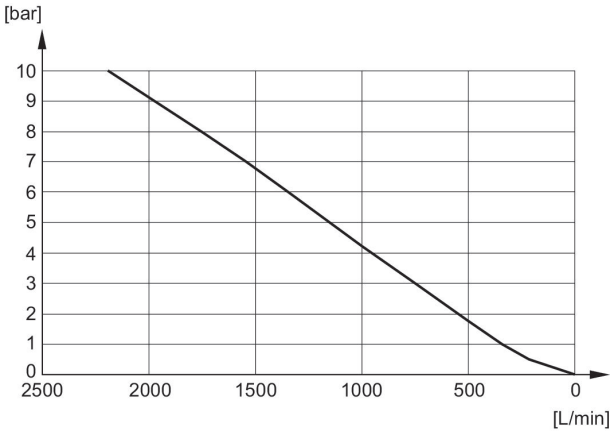

Flow diagram

R412007877

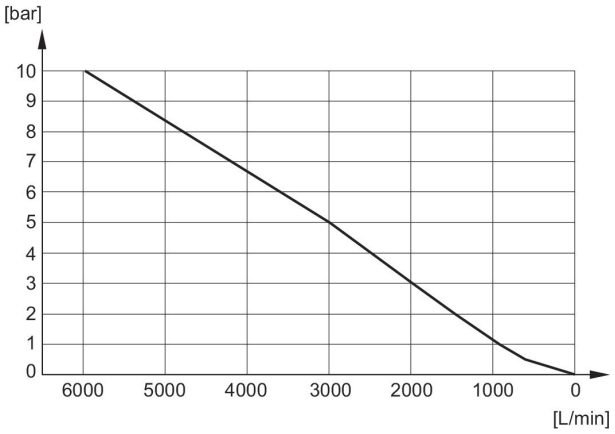

Flow diagram

R412007878

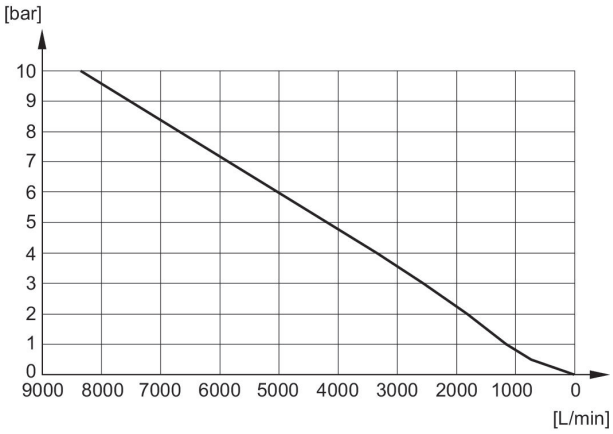

Silencers, series SI1, Polyethylene

Compressed air connection type: External thread
Silencer material: Polyethylene
Ambient temperature min./max.: -25 °C ... 80 °C
Working pressure min./max.: 0 bar ... 10 bar





G	Sound pressure level [dB]	Nominal flow [l/min]	Delivery unit [piece]	Weight [kg]	Part No.
G 1/8	78	1560	5	0.002	1827000019

Dimensions

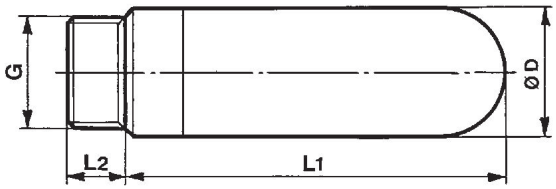

Part No.	Port G	Ø D	L1	L2
1827000018	M5	6.5	17.5	4
1827000019	G 1/8	12.5	28.5	5.5
1827000020	G 1/4	15.5	34.5	8
1827000021	G 3/8	18.5	56	11.5
1827000022	G 1/2	23.3	66.5	11
1827000023	G 3/4	38.5	115.5	16
1827000024	G 1	49	140	21

Flow diagram

1827000018

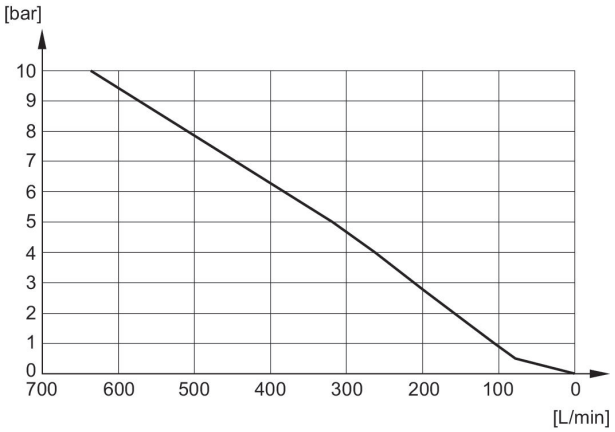

Flow diagram

1827000019

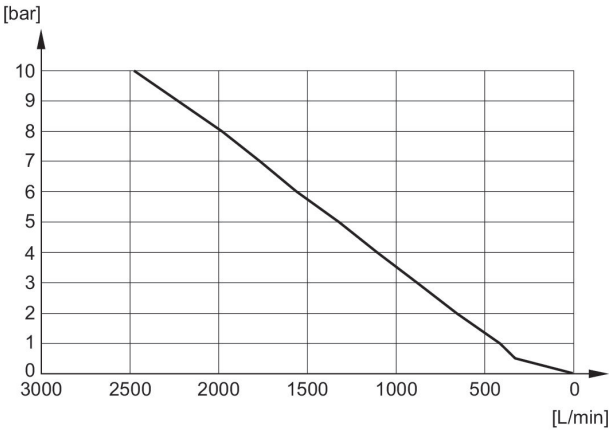

Flow diagram

1827000020

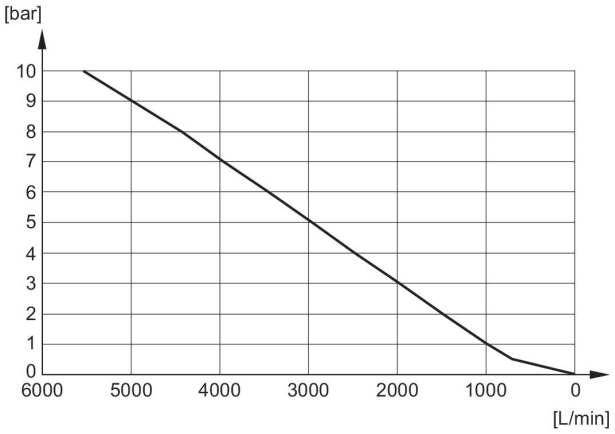

Flow diagram

1827000021

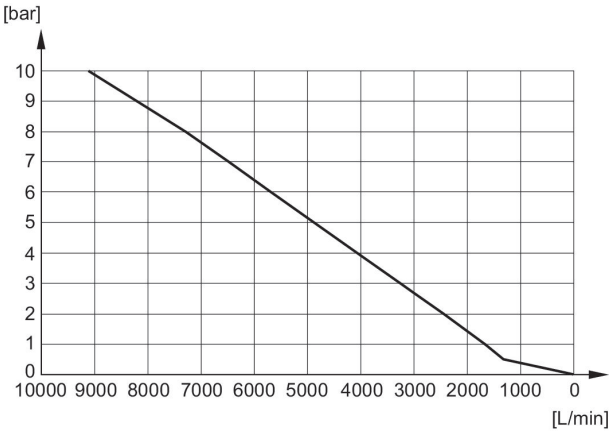

Flow diagram

1827000022

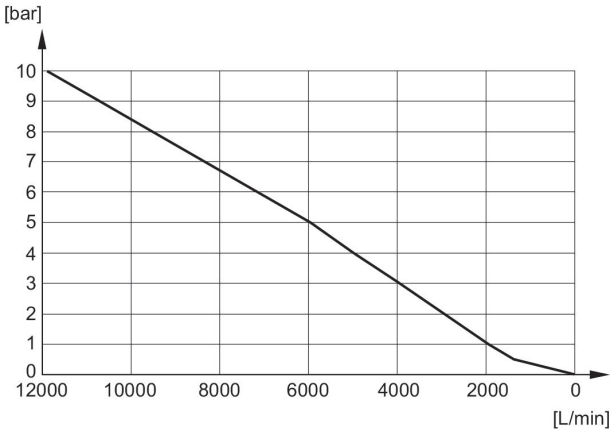

Flow diagram

1827000023

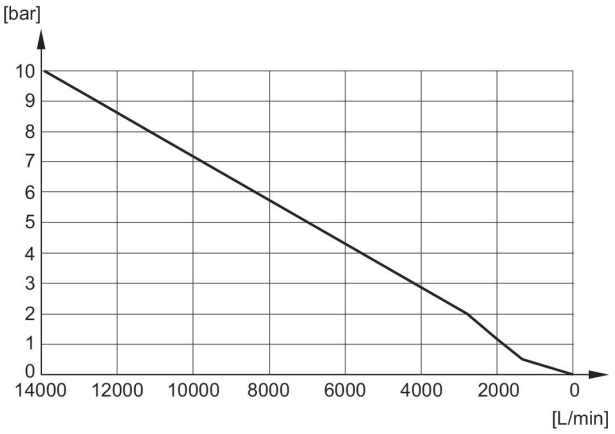

Flow diagram

1827000024

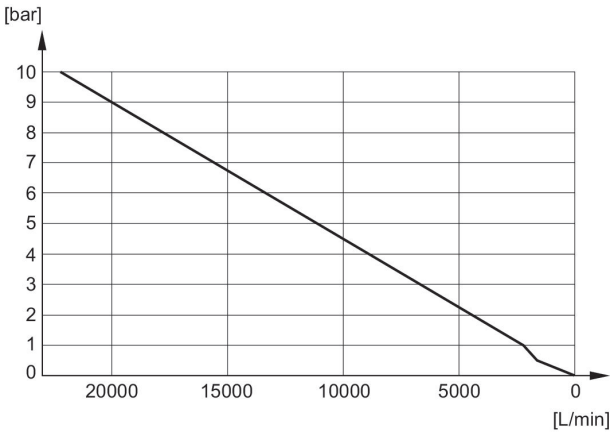

Efficient pneumatic solutions, our program: cylinders and drives, valves and valve systems, air supply management, proportional pressure control valves







Visit us: **www.Emerson.com/aventics**
Your local contact: **Emerson.com/contactus**

Emerson.com
Facebook.com/EmersonAutomationSolutions
LinkedIn.com/company/Emerson-Automation-Solutions
Twitter.com/EMR_Automation

The Emerson logo is a trademark and service mark of Emerson Electric Co. AVENTICS is a registered trademark of one of the Emerson family of companies. All other trademarks are the property of their respective owners. © 2020 Emerson Electric Co. All rights reserved.

EMERSON.

CONSIDER IT SOLVED®