Inductive sensor
Ni4U-Q8SE-AP6X

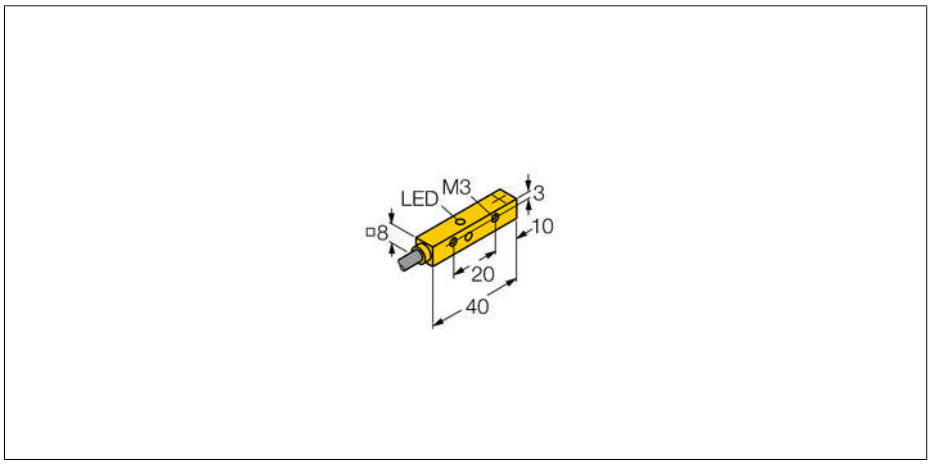

- **Rectangular, height 8 mm**
- **Active face on top**
- **Factor 1 for all metals**
- **Extended switching distance**
- **Protection class IP68**
- **Magnetic field immune**
- **Predamping protection through self-compensation**
- **Flush-mountable on up to 4 sides**
- **DC 3-wire, 10…30 VDC**
- **NO contact, PNP output**
- **Cable connection**

Type	Ni4U-Q8SE-AP6X
Ident-No.	4635807
Rated operating distance Sn	4 mm
Mounting condition	non-flush, flush mountable
Assured sensing range	≤ (0,81 x Sn) mm
Repeatability	≤ 2 %
Temperaturdrift	10 %
	≤ ± 15 %, ≤ -25 °C v ≥ +70 °C
Hysteresis	3…15 %
Ambient temperature	-30…+85 °C
Operating voltage	10…30VDC
Residual ripple	≤ 10 % U_{ss}
DC rated operational current	≤ 150 mA
No-load current I_0	≤ 15 mA
Residual current	≤ 0.1 mA
Rated insulation voltage	≤ 0.5 kV
Short-circuit protection	yes/ cyclic
Voltage drop at I_e	≤ 1.8 V
Wire breakage / Reverse polarity protection	yes/ complete
Output function	3-wire, NO contact, PNP
Protection class	⧈
Switching frequency	1 kHz
Design	rectangular, Q8SE
Dimensions	40 x 8 x 8 mm
Housing material	Plastic, PP, yellow
Tightening torque	0.6 Nm
Connection	cable
Cable quality	3 mm, LifYY-11Y, PUR, 2 m
Cable cross section	3 x 0.14 mm²
Vibration resistance	55 Hz (1 mm)
Shock resistance	30 g (11 ms)
Protection class	IP68
MTTF	874years acc. to SN 29500 (Ed. 99) 40 °C
Switching state	LED yellow

Wiring diagram

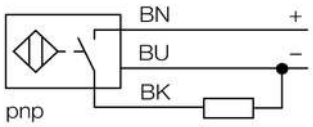

Functional principle

Inductive sensors detect metal objects contactless and wear-free. Due to the patented multi-coil system, *Uprox*®+ sensors have distinct advantages compared to conventional sensors. They excel in highest switching distances, maximum flexibility and operational reliability as well as efficient standardization.

Edition • 2012-06-23T09:10:25+02:00

Mounting instructions	minimum distances
Distance D	24 mm
Distance W	12 mm
Distance S	12 mm
Distance G	24 mm

Width of the active face B	8 mm

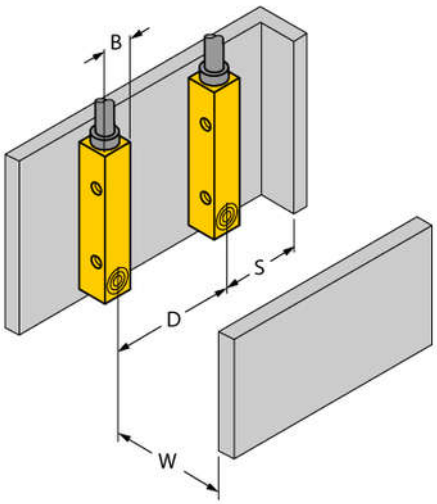

Flush mounting on 4 sides

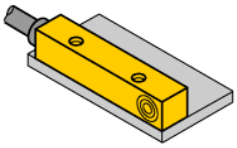

1-side mounting:
Sr = 3,5 mm

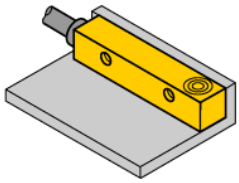

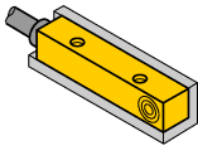

2-side mounting:
Sr = 3,0 mm

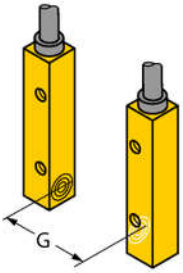

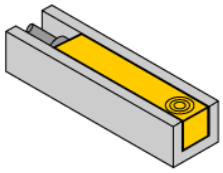

3-side mounting:
Sr = 2,5 mm

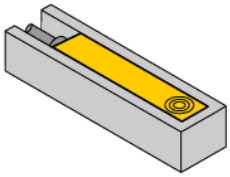

4-side mounting:
Sr = 2,0 mm

Edition • 2012-06-23T09:10:25+02:00