M9H215

Position sensor

M9B2002-ARKG/B/AM/0,5M/ZH/US

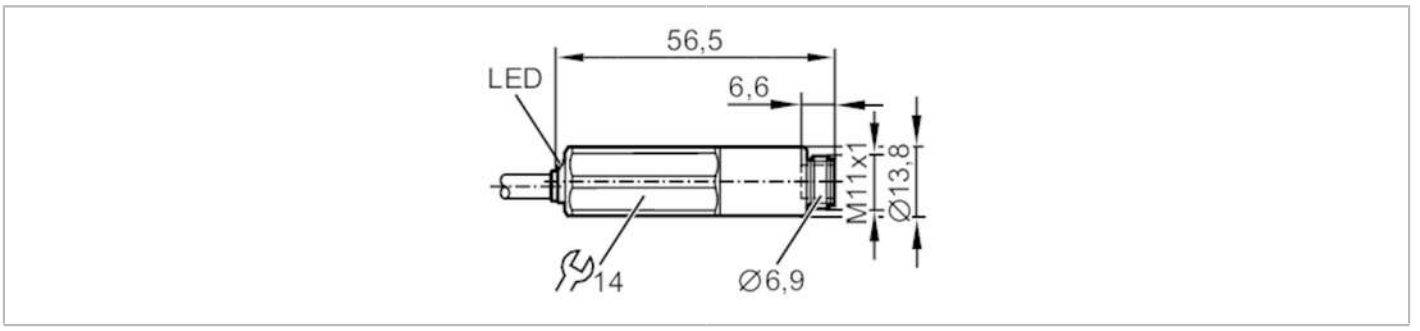

Product characteristics		
Electrical design		PNP/NPN
Output function		normally open
Dimensions	[mm]	M11 x 1 / L = 56.5
Application		
Application		lubricant distributor with plunger
Media		detects ferrous metals
Pressure rating	[bar]	350
Electrical data		
Operating voltage	[V]	10...36 DC
Rated insulation voltage	[V]	60
Protection class		III
Reverse polarity protection		yes
Max. power-on delay time	[ms]	300
Outputs		
Electrical design		PNP/NPN
Output function		normally open
Max. voltage drop switching output DC	[V]	5.9
Minimum load current	[mA]	5
Max. leakage current	[mA]	0.8
Permanent current rating of switching output DC	[mA]	100
Switching frequency DC	[Hz]	10
Short-circuit protection		yes
Type of short-circuit protection		pulsed
Overload protection		yes
Detection zone		
Real sensing range Sr	[mm]	2 ± 10 %
Operating distance	[mm]	0...1.62
Accuracy / deviations		
Hysteresis	[% of Sr]	3...15

M9H215

Position sensor

M9B2002-ARKG/B/AM/0,5M/ZH/US

Operating conditions			
Ambient temperature	[°C]	-40...85	
Note on ambient temperature		for flexibly laid cable: -25 °C	
		for firmly laid cable: -40 °C	
Protection		IP 65; IP 67	

Tests / approvals			
EMC		EN 61000-4-2 ESD	4 kV CD / 8 kV AD
		EN 61000-4-3 HF radiated	10 V/m 80...2000 MHz
		EN 61000-4-4 Burst	2 kV
		EN 61000-4-6 HF conducted	10 V 0,15...80 MHz
		EN 61000-4-8	30 A/m
		EN 55011	class B
Vibration resistance		EN 60068-2-6 Fc	50x 20 g / 10...3000 Hz -20 °C
		EN 60068-2-6 Fc	50x 20 g / 10...3000 Hz +50 °C
Shock resistance		EN 60068-2-27 Ea	3 x 100 g 11 ms / -25 °C
		EN 60068-2-27 Ea	3 x 100 g 11 ms / +85 °C
Continuous shock resistance		EN 60068-2-27 Ea	4000 x 40 g 6 ms / -20 °C / 50 °C
MTTF	[years]	830	

Mechanical data		
Weight	[g]	78.9
Mounting		flush mountable
Dimensions	[mm]	M11 x 1 / L = 56.5
Thread designation		M11 x 1
Materials		sensing face: stainless steel (1.4404 / 316L); housing: stainless steel (1.4404 / 316L); end cap: TPU
Tightening torque	[Nm]	< 18
Process connection		threaded connection M11 x 1 external thread

Displays / operating elements		
Display	switching status	LED, yellow

Remarks	
Pack quantity	1 pcs.

Electrical connection

Cable: 0.5 m, PUR

Connector: 1 x M12; coding: A



M9H215

Position sensor

M9B2002-ARKG/B/AM/0,5M/ZH/US

Connection

