JUDODIX ISO fitting



Technical specifications

IP66 CE

Certifications
- ISO metric thread - EN 60423 and EN 50262

Material
Nickel plated brass,
Polyethylene terminal

IP66
EN 60529

To be used with CAPRIPLAST and CAPRIFLEX conduits

Description

JUDODIX is a range of conduit fittings for use with our CAPRIPLAST and CAPRIFLEX helically wound steel conduits.

Securing on the inner and the outer of the conduit, JUDODIX fittings provide an IP66 protection.

Available in nickel plated brass or stainless steel, JUDODIX fittings offer ISO and Pg, male and female thread options which make these truly flexible products.

Powering Business Worldwide

Ordering codes

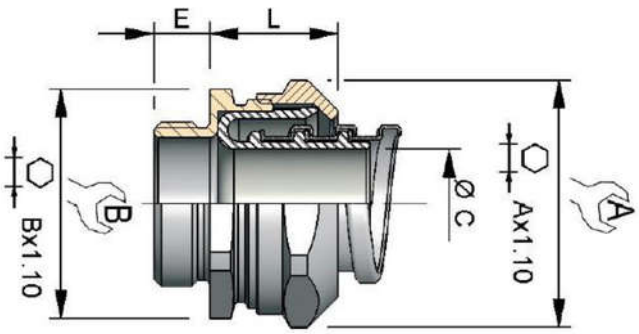

Male JUDODIX ISO fitting

SIZE	MALE THREAD	E	L	C	FLAT A	FLAT B	ORDER UNIT	CATALOG NUMBER
7	M12	6.0	10.0	7.5	19.0	17.0	10	CAP339124
9	M16	6.0	12.5	9.0	22.0	20.0	10	CAP339164
11	M20	7.0	13.0	11.5	26.0	24.0	10	CAP339224
13	M20	7.0	13.0	13.5	28.0	26.0	10	CAP339204
16	M25	8.0	14.0	15.0	30.0	28.0	10	CAP339254
21	M25	8.0	16.5	20.0	36.0	34.0	5	CAP339264
21	M32	8.0	16.5	20.0	36.0	36.0	2	CAP339324
29	M32	8.0	19.5	26.5	47.0	45.0	2	CAP339334
29	M40	10.0	19.5	26.5	47.0	45.0	2	CAP339404
36	M40	10.0	26.0	34.5	60.0	56.0	2	CAP339414
36	M50	11.0	26.0	34.5	60.0	56.0	2	CAP339504
48	M63	11.0	32.5	45.5	74.0	70.0	2	CAP339634
3"	M90	22.0	51.0	70.5	120.0	110.0	1	CAP339904
4"	M110	22.0	59.5	97.0	150.0	140.0	1	CAP339994

Female JUDODIX ISO fitting

SIZE	FEMALE THREAD	E	L	C	FLAT A	FLAT B	ORDER UNIT	CATALOG NUMBER
7	M12	6.0	10.0	7.5	19.0	17.0	10	CAP629124
9	M16	6.0	12.5	9.0	22.0	20.0	10	CAP629164
11	M20	7.0	13.0	11.5	26.0	24.0	1	CAP629224
13	M20	7.0	13.0	13.5	28.0	26.0	1	CAP629204
16	M25	8.0	14.0	15.0	30.0	28.0	1	CAP629254
21	M25	8.0	16.5	20.0	36.0	34.0	1	CAP629264
21	M32	8.0	16.5	20.0	36.0	36.0	1	CAP629324
29	M32	8.0	19.5	26.5	47.0	45.0	1	CAP629334
29	M40	10.0	19.5	26.5	47.0	45.0	1	CAP629404
36	M40	10.0	26.0	34.5	60.0	56.0	1	CAP629414
36	M50	11.0	26.0	34.5	60.0	56.0	1	CAP629504
48	M63	11.0	32.5	45.5	74.0	70.0	1	CAP629634
3"	M90	22.0	51.0	70.5	120.0	110.0	1	CAP629904
4"	M110	22.0	59.5	97.0	150.0	140.0	1	CAP629994

Powering Business Worldwide

© 2022 Eaton
All Rights Reserved
September 2022

www.eaton.eu

Eaton is a registered trademark.

All other trademarks are property of their respective owners.