NU 2311 ECP

Popular item
SKF Explorer

Dimensions

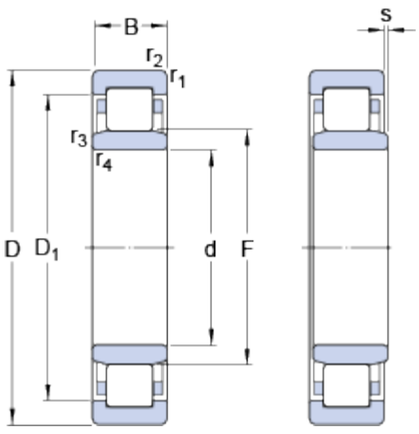

d		55	mm
D		120	mm
B		43	mm
D_1	≈	100.3	mm
F		70.5	mm
$r_{1,2}$	min.	2	mm
$r_{3,4}$	min.	2	mm
s	max.	3.5	mm

Abutment dimensions

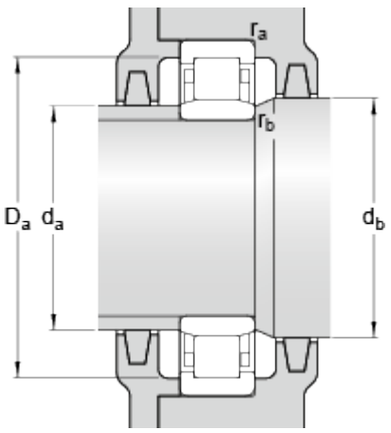

d_a	min.	65	mm
d_a	max.	68	mm
d_b	min.	73	mm
D_a	max.	109.2	mm
r_a	max.	2	mm
r_b	max.	2	mm

Calculation data

Basic dynamic load rating	C	232	kN
Basic static load rating	C_0	232	kN
Fatigue load limit	P_u	30.5	kN
Reference speed		6000	r/min
Limiting speed		7000	r/min
Calculation factor	k_r	0.25	
Limiting value	e	0.3	
Axial load factor	Y	0.4	

Mass

Mass bearing	2.23	kg

Associated products

Angle ring	HJ 2311 EC