NH fuse-links aM 500VAC

double indicator/live gripping-lugs size 000, 00, 0, 1, 2, 3

LOW VOLTAGE IEC FUSES

IEC NH FUSE-LINKS



FEATURES & BENEFITS

- Dimensions according to DIN 43 620 parts 1 to 4
- Non-isolated gripping lugs
- Double indicator
- 0% cadmium

APPLICATIONS

- aM: Partial purpose, motor circuit protection

STANDARDS

- VDE 0636 Part 201
- IEC 60269-1 and -2

The NH system is classified among plug-in fuse systems and is composed of:

- fuse-base (possibly including terminal covers and phase barriers)
- fuse-link with blade contact
- fuse-link replacement device (LV HRC fuse puller)

Since the design of this system cannot guarantee non-interchangeability of rated current it must be handled by a qualified professional.

Type “aM” NH fuse-links are partial-range breaking capacity fuse-links, used to protect motor circuits as they are strongly current-limiting and have low power losses. They interrupt currents from 6.3 times In up to their maximum breaking capacity and are therefore suited for short-circuit protection only. They must be associated with other switchgear for protection against overloads. These fuse-links can have a rated current equal to the motor’s nominal current.

TECHNICAL DATA OVERVIEW

Voltage AC	500 VAC
Ampere Range (A)	2 ... 630 A
Size per Standard	000, 00, 0, 1, 2, 3
Speed/Characteristic	aM
I.R. AC (IEC)	120 kA
Body Material	ceramic
Contact Materials	copper, silver-plated

© 2021 Mersen. All rights reserved. Mersen reserves the right to change, adapt, limit or discontinue its products. Therefore the data provided herein are for information only and are not contractually binding. To ensure that Mersen provides the best solution to your needs, please contact and provide Mersen with all relevant technical specifications and conditions.

PRODUCT RANGE



NH000AM50V63

Size 000 aM 500VAC

Catalog number	Item number	Rated voltage AC (IEC)	Rated current I_n	Power dissipation at I_n	Package	Weight
NH000AM50V2	K232493	500 V	2 A	0.1 W	3	0.13 kg
NH000AM50V4	L232494	500 V	4 A	0.2 W	3	0.13 kg
NH000AM50V6	M232495	500 V	6 A	0.3 W	3	0.13 kg
NH000AM50V10	N232496	500 V	10 A	0.5 W	3	0.13 kg
NH000AM50V16	P232497	500 V	16 A	0.7 W	3	0.13 kg
NH000AM50V20	Q232498	500 V	20 A	0.9 W	3	0.13 kg
NH000AM50V25	R232499	500 V	25 A	1.2 W	3	0.13 kg
NH000AM50V32	S232500	500 V	32 A	1.5 W	3	0.13 kg
NH000AM50V35	T232501	500 V	35 A	1.6 W	3	0.13 kg
NH000AM50V40	V232502	500 V	40 A	1.8 W	3	0.13 kg
NH000AM50V50	W232503	500 V	50 A	2.3 W	3	0.13 kg
NH000AM50V63	X232504	500 V	63 A	2.9 W	3	0.13 kg
NH000AM50V80	C227863	500 V	80 A	3.6 W	3	0.13 kg



NH00AM50V100

Size 00 aM 500VAC

Catalog number	Item number	Rated voltage AC (IEC)	Rated current I_n	Power dissipation at I_n	Package	Weight
NH00AM50V100	Y232505	500 V	100 A	5.8 W	3	0.2 kg
NH00AM50V125	Z232506	500 V	125 A	6.4 W	3	0.2 kg
NH00AM50V160	J227869	500 V	160 A	7.9 W	3	0.2 kg



NH0AM50V100

Size 0 aM 500VAC

Catalog number	Item number	Rated voltage AC (IEC)	Rated current I_n	Power dissipation at I_n	Package	Weight
NH0AM50V100	A232507	500 V	100 A	6 W	3	0.26 kg
NH0AM50V125	B232508	500 V	125 A	7.9 W	3	0.26 kg
NH0AM50V160	C232509	500 V	160 A	10.5 W	3	0.26 kg
NH0AM50V200	A227884	500 V	200 A	11.8 W	3	0.26 kg



NH1AM50V200

Size 1 aM 500VAC

Catalog number	Item number	Rated voltage AC (IEC)	Rated current I_n	Power dissipation at I_n	Package	Weight
NH1AM50V100	D232510	500 V	100 A	5.8 W	3	0.42 kg
NH1AM50V125	E232511	500 V	125 A	7.5 W	3	0.42 kg
NH1AM50V160	F232512	500 V	160 A	10.4 W	3	0.42 kg
NH1AM50V200	G232513	500 V	200 A	14.2 W	3	0.42 kg
NH1AM50V224	H232514	500 V	224 A	15.8 W	3	0.42 kg
NH1AM50V250	J232515	500 V	250 A	18 W	3	0.42 kg
NH1AM50V315	K227962	500 V	315 A	22.1 W	3	0.42 kg



NH2AM50V250

Size 2 aM 500VAC

Catalog number	Item number	Rated voltage AC (IEC)	Rated current I_n	Power dissipation at I_n	Package	Weight
NH2AM50V250	K232516	500 V	250 A	16.8 W	3	0.64 kg
NH2AM50V315	L232517	500 V	315 A	23.1 W	3	0.64 kg
NH2AM50V355	M232518	500 V	355 A	26.4 W	3	0.64 kg
NH2AM50V400	N232519	500 V	400 A	29.7 W	3	0.64 kg

© 2021 Mersen. All rights reserved. Mersen reserves the right to change, adapt, limit or discontinue its products. Therefore the data provided herein are for information only and are not contractually binding. To ensure that Mersen provides the best solution to your needs, please contact and provide Mersen with all relevant technical specifications and conditions.

NH fuse-links aM 500VAC

double indicator/live gripping-lugs size 000, 00, 0, 1, 2, 3

PRODUCT RANGE



NH3AM50V630

Size 3 aM 500VAC

Catalog number	Item number	Rated voltage AC (IEC)	Rated current I_n	Power dissipation at I_n	Package	Weight
NH3AM50V315	P232520	500 V	315 A	21 W	1	1.05 kg
NH3AM50V355	Q232521	500 V	355 A	23.3 W	1	1.05 kg
NH3AM50V400	R232522	500 V	400 A	29.1 W	1	1.05 kg
NH3AM50V425	S232523	500 V	425 A	29.1 W	1	1.05 kg
NH3AM50V450	T232524	500 V	450 A	34 W	1	1.05 kg
NH3AM50V500	V232525	500 V	500 A	42 W	1	1.05 kg
NH3AM50V630	M227987	500 V	630 A	42 W	1	1.05 kg

TECHNICAL DATA

	Sie 000	Size 00	Sie 0	Size 1	Size 2	Size 3
Size	000	00	0	1	2	3
Rated current	2 ... 80 A	100 ... 160 A	100 ... 200 A	100 ... 315 A	250 ... 400 A	315 ... 630 A
Rated breaking capacity AC	120 kA	120 kA	120 kA	120 kA	120 kA	120 kA
Rated voltage AC	500 V	500 V	500 V	500 V	500 V	500 V
Indication System	double indicator	double indicator	double indicator	double indicator	double indicator	double indicator
Width	21 mm	30 mm	30 mm	40 mm	52 mm	72 mm

© 2021 Mersen. All rights reserved. Mersen reserves the right to change, adapt, limit or discontinue its products. Therefore the data provided herein are for information only and are not contractually binding. To ensure that Mersen provides the best solution to your needs, please contact and provide Mersen with all relevant technical specifications and conditions.

TIME CURRENT CHARACTERISTIC CURVES

Size 000

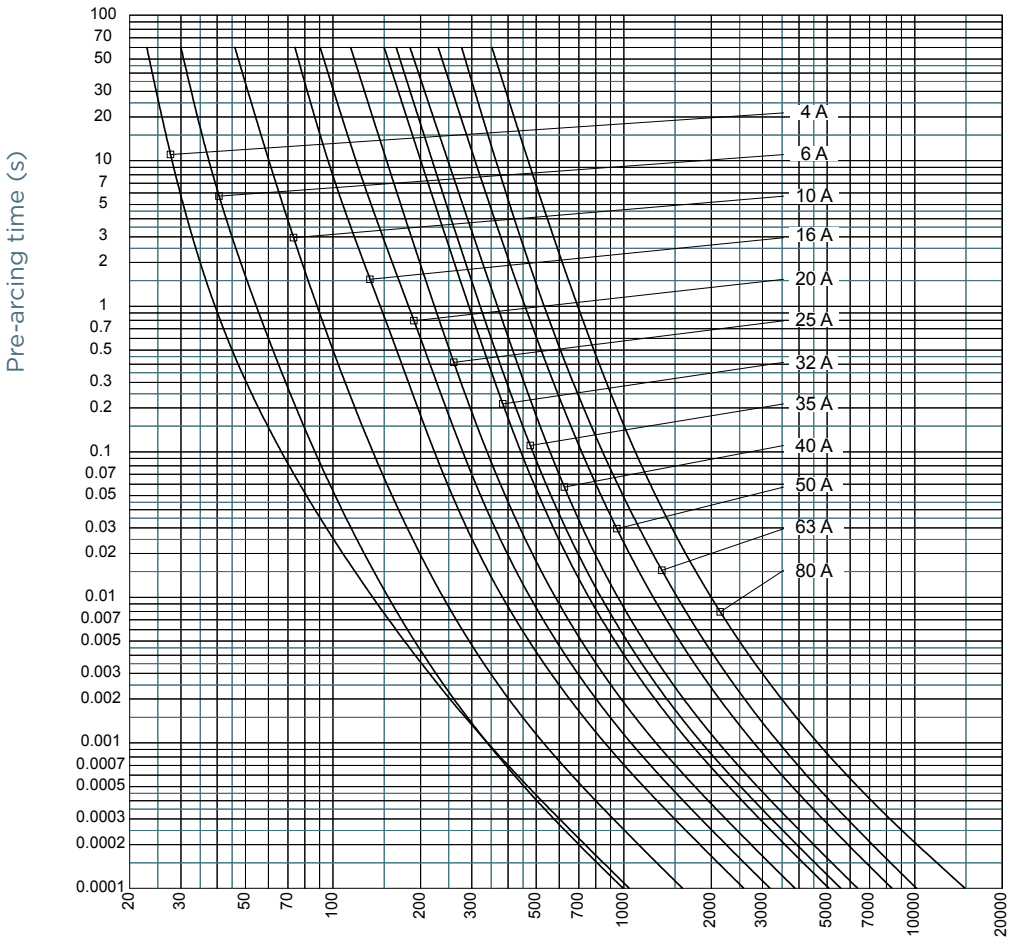

© 2021 Mersen. All rights reserved. Mersen reserves the right to change, adapt, limit or discontinue its products. Therefore the data provided herein are for information only and are not contractually binding. To ensure that Mersen provides the best solution to your needs, please contact and provide Mersen with all relevant technical specifications and conditions.

TIME CURRENT CHARACTERISTIC CURVES

Size 00

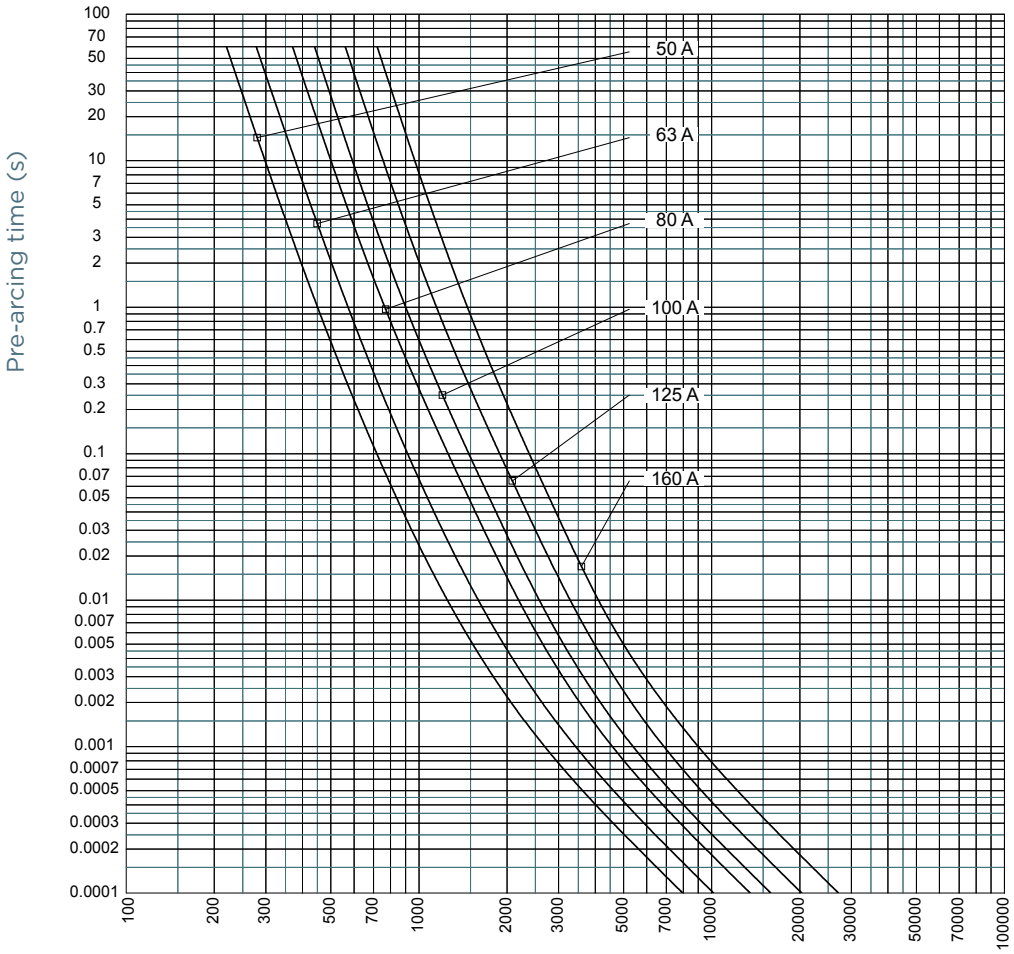

© 2021 Mersen. All rights reserved. Mersen reserves the right to change, adapt, limit or discontinue its products. Therefore the data provided herein are for information only and are not contractually binding. To ensure that Mersen provides the best solution to your needs, please contact and provide Mersen with all relevant technical specifications and conditions.

TIME CURRENT CHARACTERISTIC CURVES

Size 0

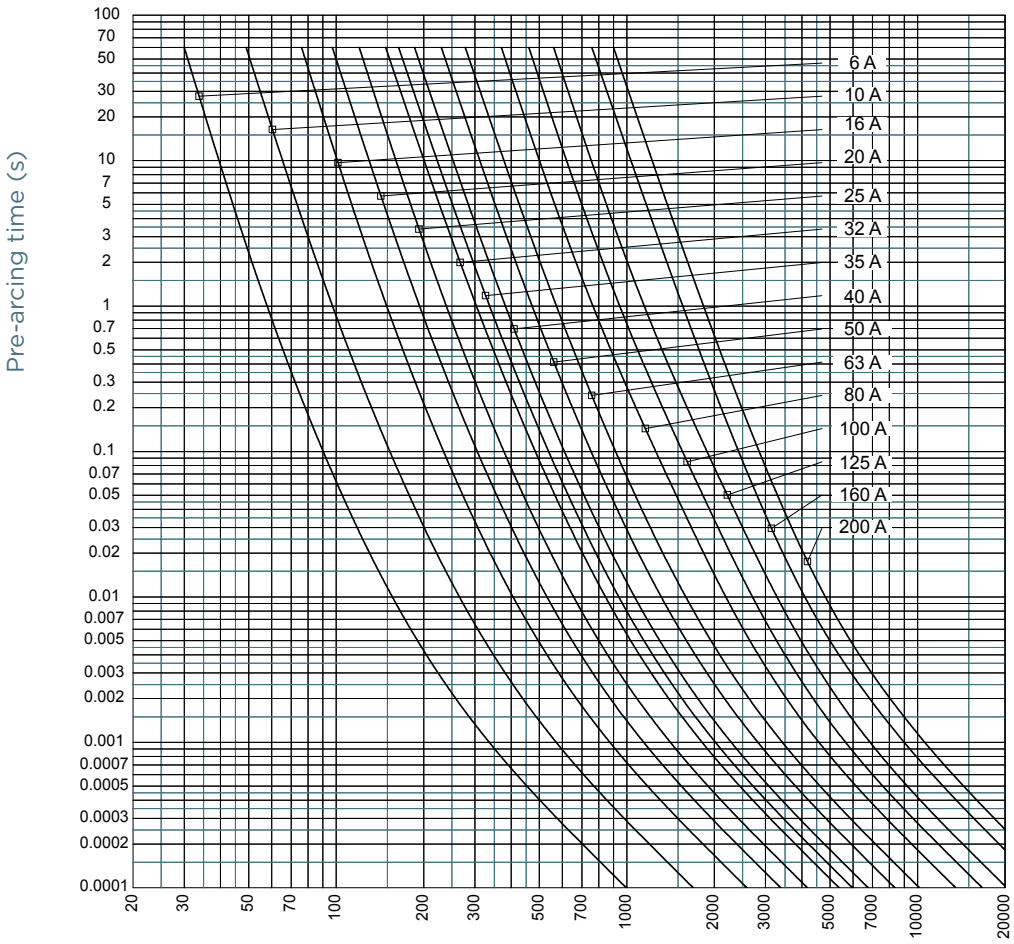

© 2021 Mersen. All rights reserved. Mersen reserves the right to change, adapt, limit or discontinue its products. Therefore the data provided herein are for information only and are not contractually binding. To ensure that Mersen provides the best solution to your needs, please contact and provide Mersen with all relevant technical specifications and conditions.

TIME CURRENT CHARACTERISTIC CURVES

Size 1

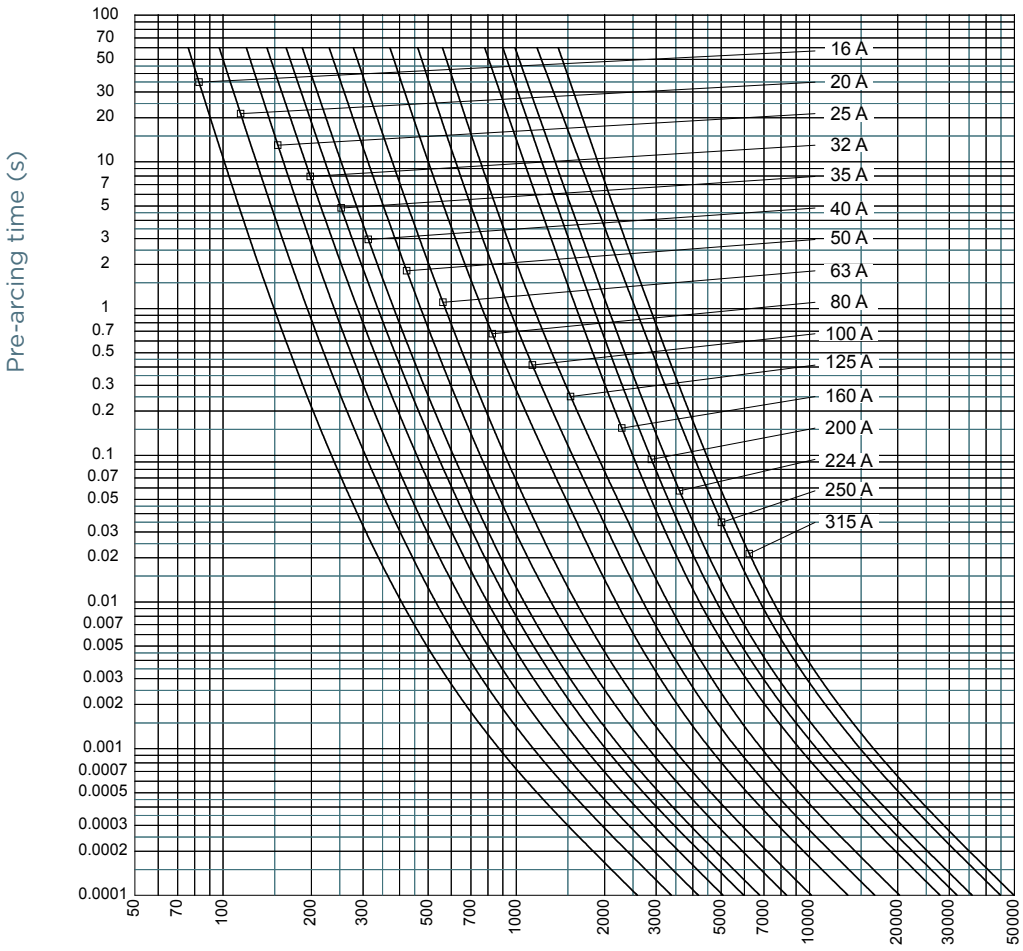

© 2021 Mersen. All rights reserved. Mersen reserves the right to change, adapt, limit or discontinue its products. Therefore the data provided herein are for information only and are not contractually binding. To ensure that Mersen provides the best solution to your needs, please contact and provide Mersen with all relevant technical specifications and conditions.

TIME CURRENT CHARACTERISTIC CURVES

Size 2

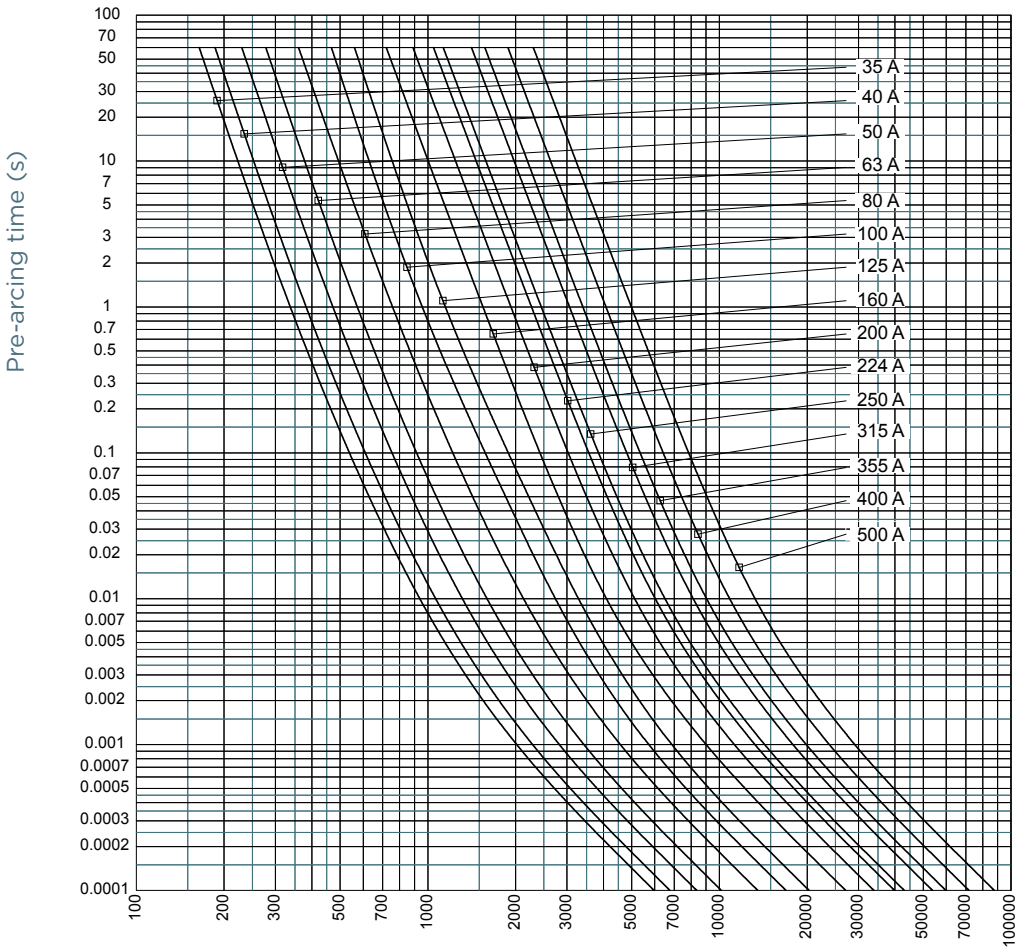

© 2021 Mersen. All rights reserved. Mersen reserves the right to change, adapt, limit or discontinue its products. Therefore the data provided herein are for information only and are not contractually binding. To ensure that Mersen provides the best solution to your needs, please contact and provide Mersen with all relevant technical specifications and conditions.

TIME CURRENT CHARACTERISTIC CURVES

Size 3

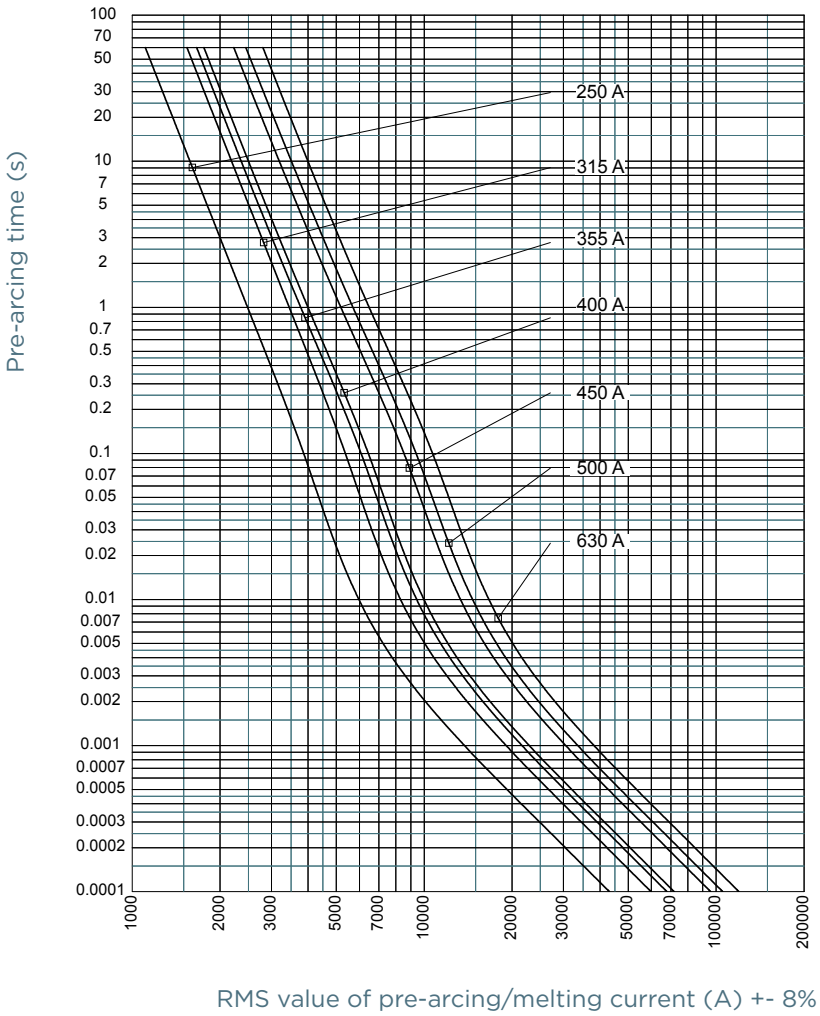

© 2021 Mersen. All rights reserved. Mersen reserves the right to change, adapt, limit or discontinue its products. Therefore the data provided herein are for information only and are not contractually binding. To ensure that Mersen provides the best solution to your needs, please contact and provide Mersen with all relevant technical specifications and conditions.

CUT-OFF CURRENT CHARACTERISTIC

Size 000

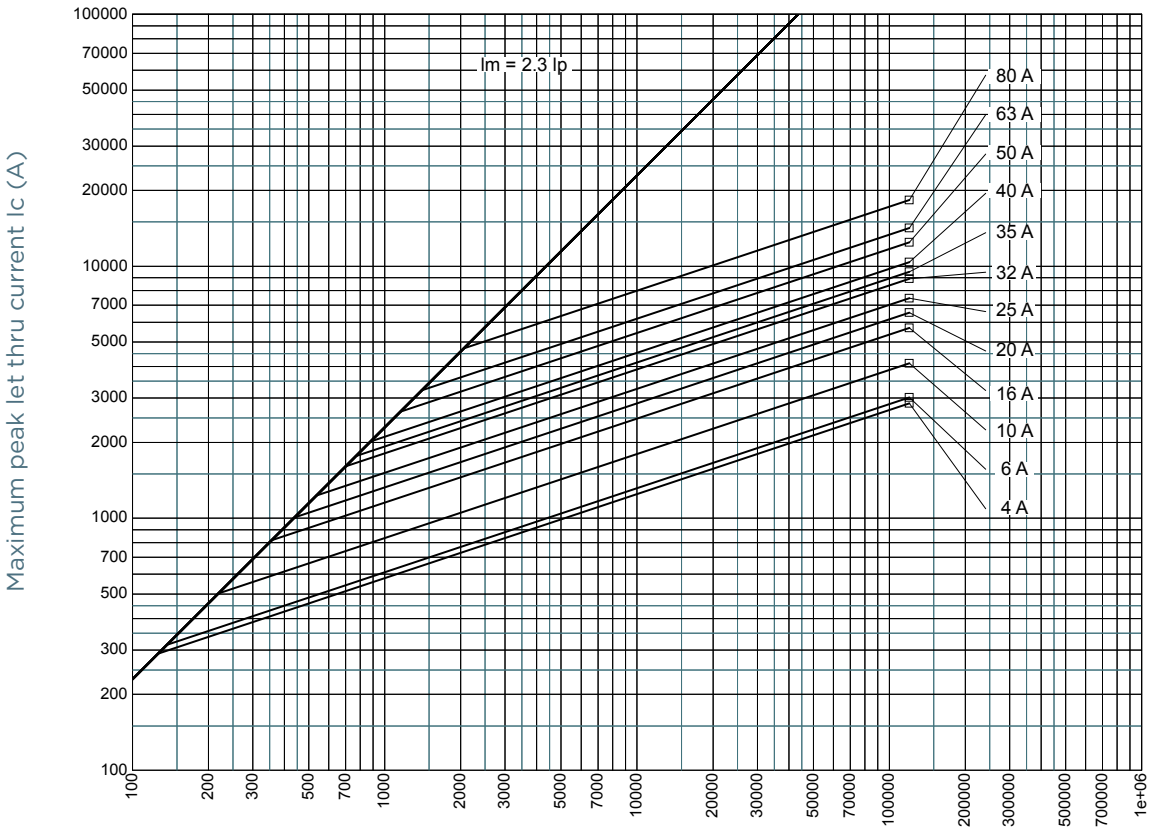

Size 00

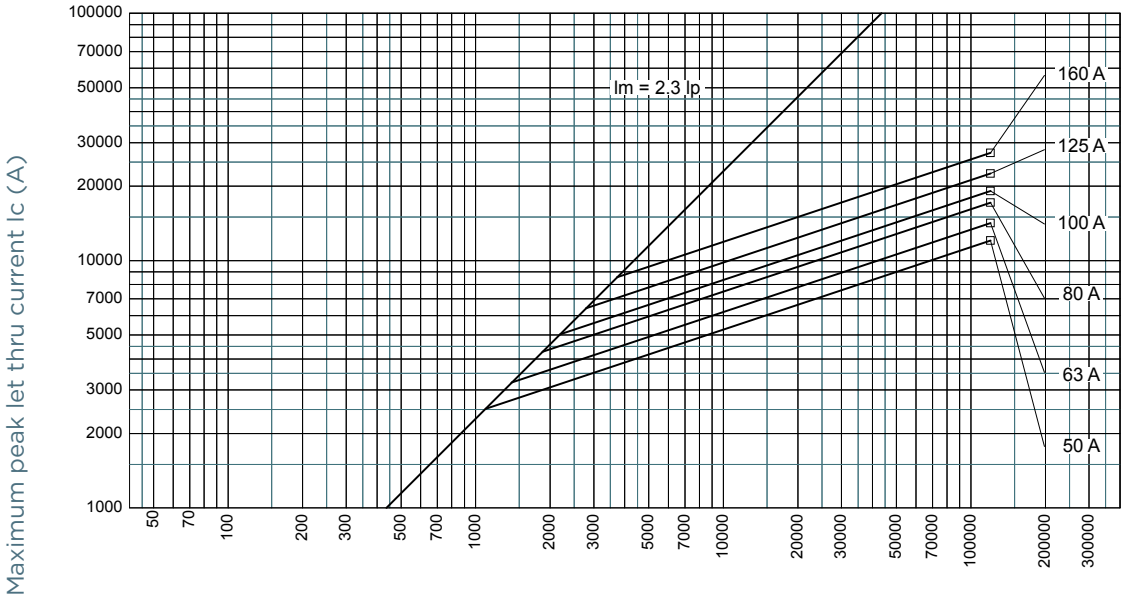

© 2021 Mersen. All rights reserved. Mersen reserves the right to change, adapt, limit or discontinue its products. Therefore the data provided herein are for information only and are not contractually binding. To ensure that Mersen provides the best solution to your needs, please contact and provide Mersen with all relevant technical specifications and conditions.

CUT-OFF CURRENT CHARACTERISTIC

Size 0

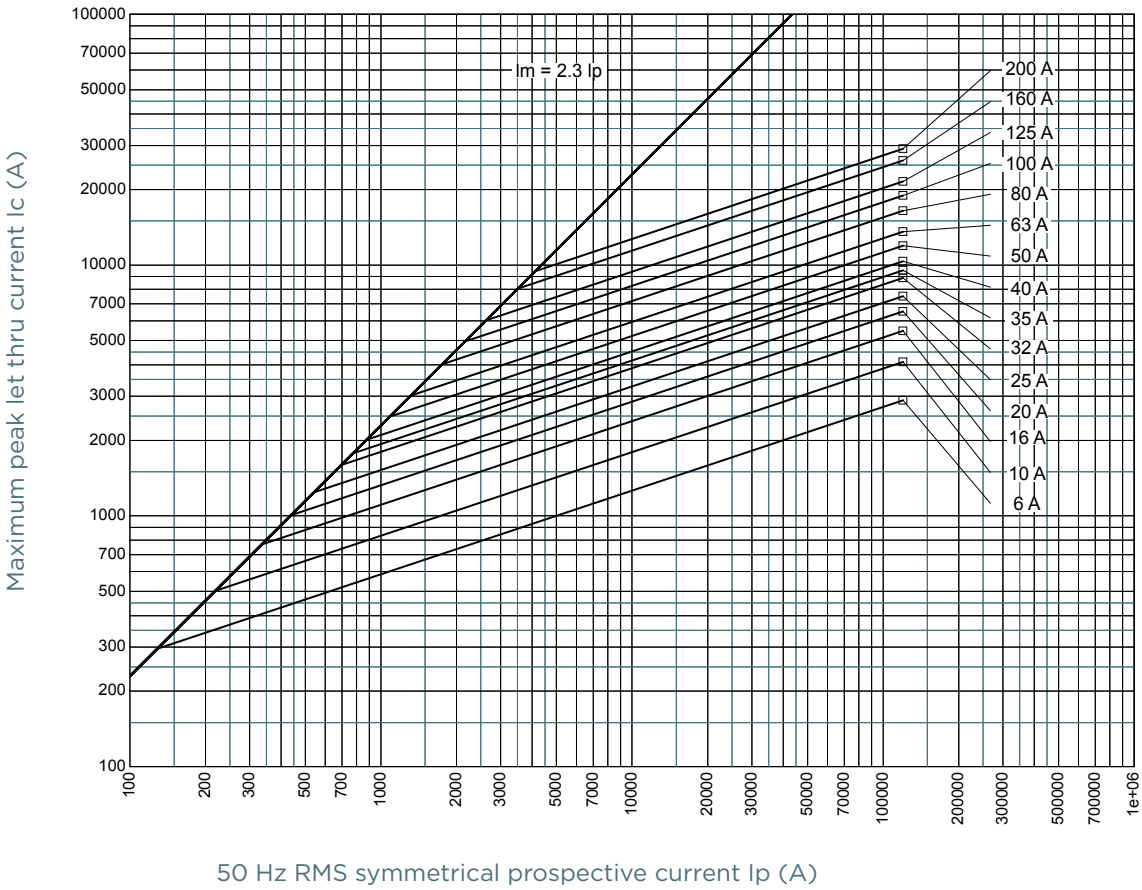

© 2021 Mersen. All rights reserved. Mersen reserves the right to change, adapt, limit or discontinue its products. Therefore the data provided herein are for information only and are not contractually binding. To ensure that Mersen provides the best solution to your needs, please contact and provide Mersen with all relevant technical specifications and conditions.

CUT-OFF CURRENT CHARACTERISTIC

Size 1

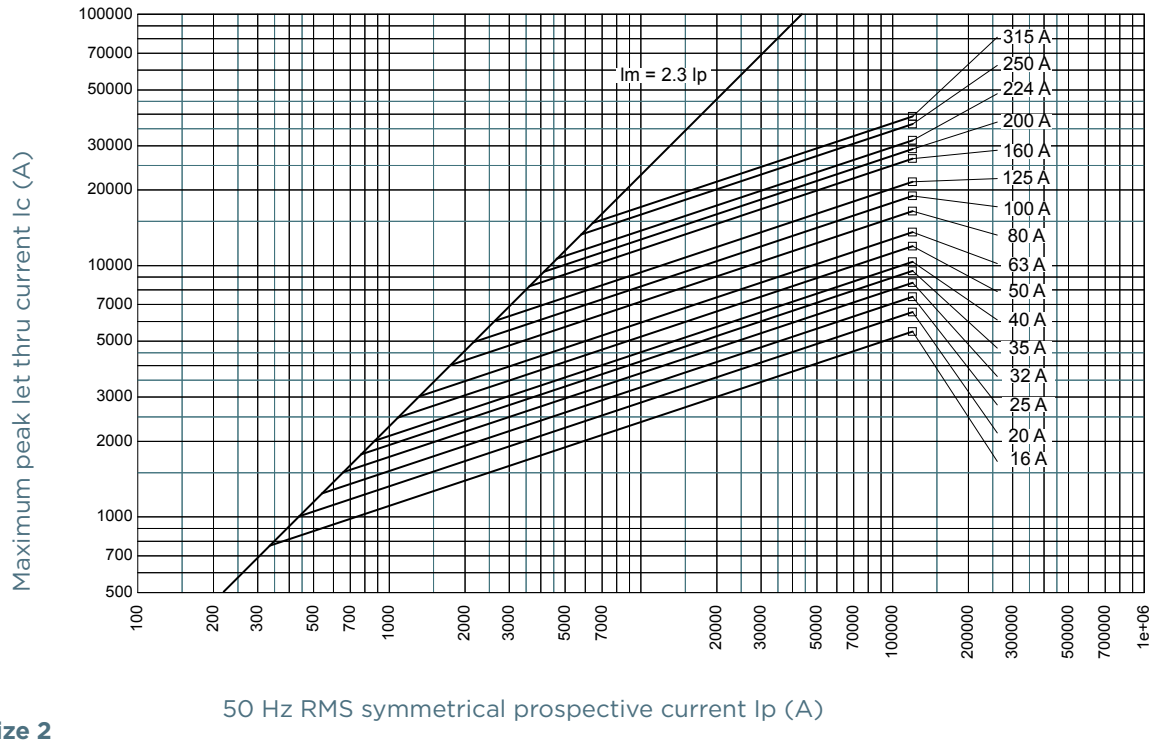

Size 2

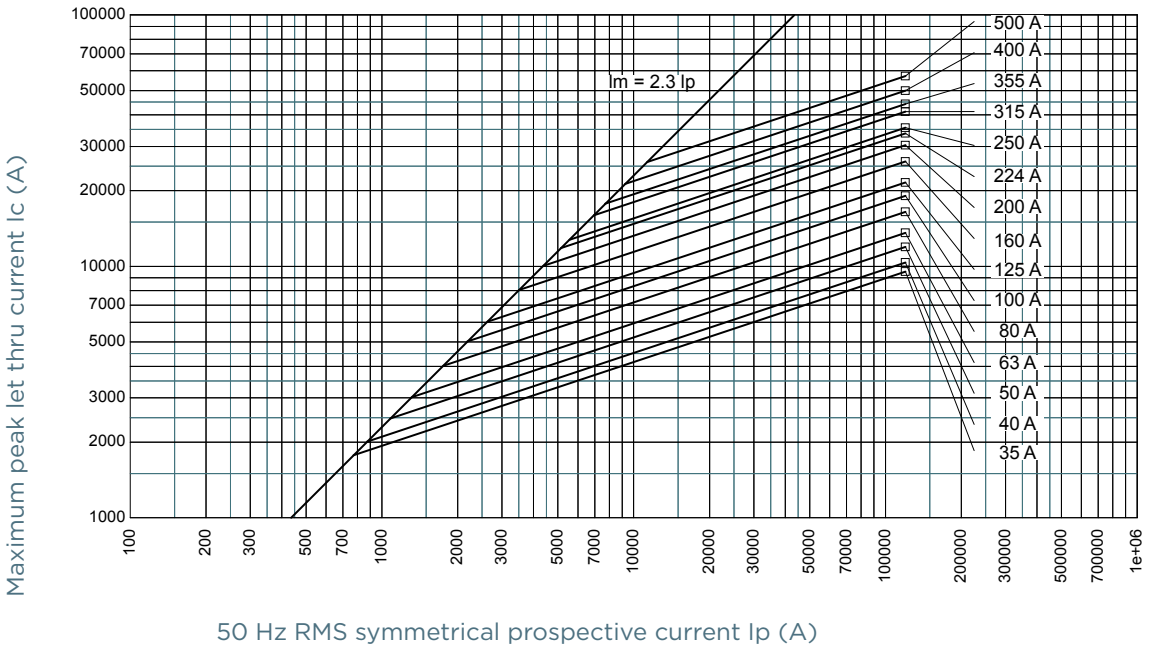

© 2021 Mersen. All rights reserved. Mersen reserves the right to change, adapt, limit or discontinue its products. Therefore the data provided herein are for information only and are not contractually binding. To ensure that Mersen provides the best solution to your needs, please contact and provide Mersen with all relevant technical specifications and conditions.

CUT-OFF CURRENT CHARACTERISTIC

Size 3

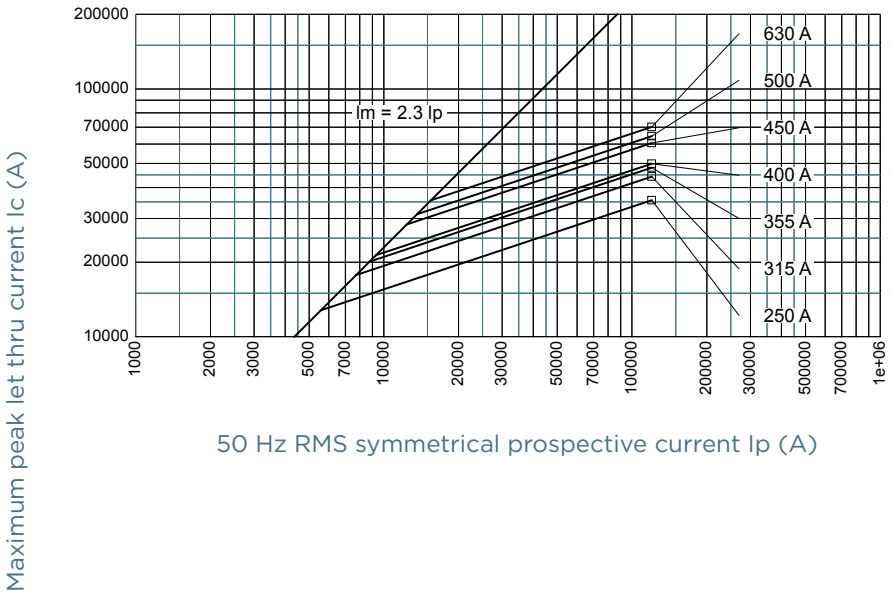

© 2021 Mersen. All rights reserved. Mersen reserves the right to change, adapt, limit or discontinue its products. Therefore the data provided herein are for information only and are not contractually binding. To ensure that Mersen provides the best solution to your needs, please contact and provide Mersen with all relevant technical specifications and conditions.

PRE-ARCING AND OPERATING I^2T CHARACTERISTICS

Size 000

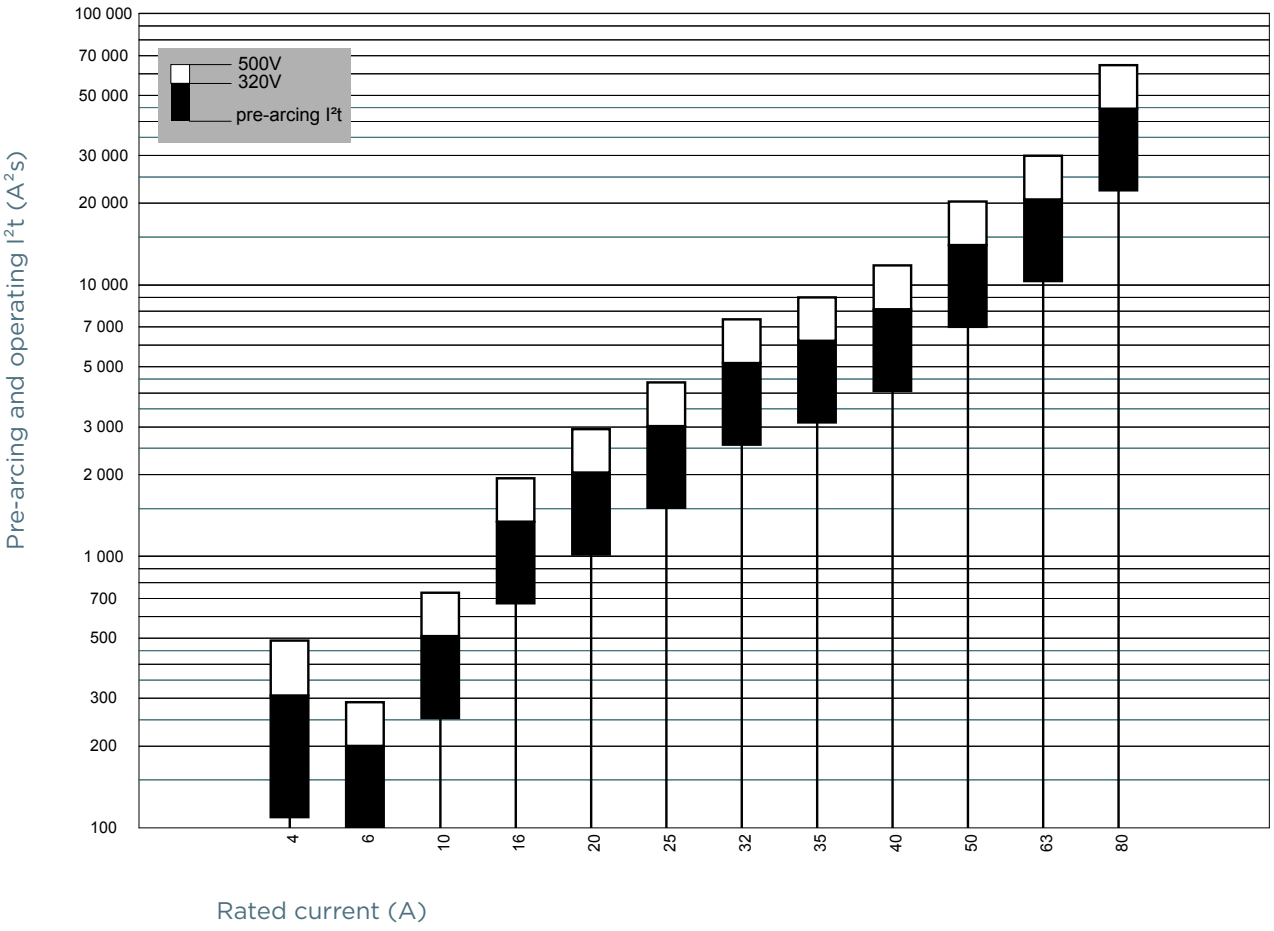

Size 00

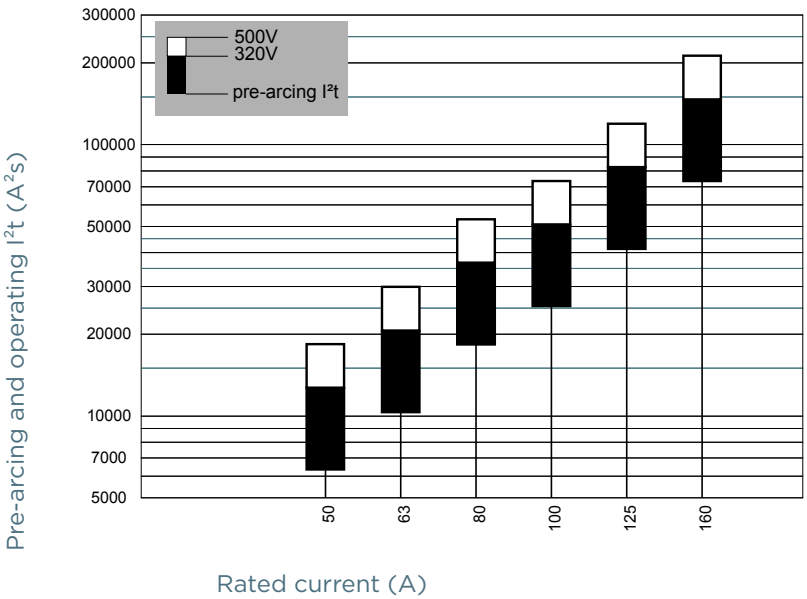

© 2021 Mersen. All rights reserved. Mersen reserves the right to change, adapt, limit or discontinue its products. Therefore the data provided herein are for information only and are not contractually binding. To ensure that Mersen provides the best solution to your needs, please contact and provide Mersen with all relevant technical specifications and conditions.

PRE-ARCING AND OPERATING I^2T CHARACTERISTICS

Size 0

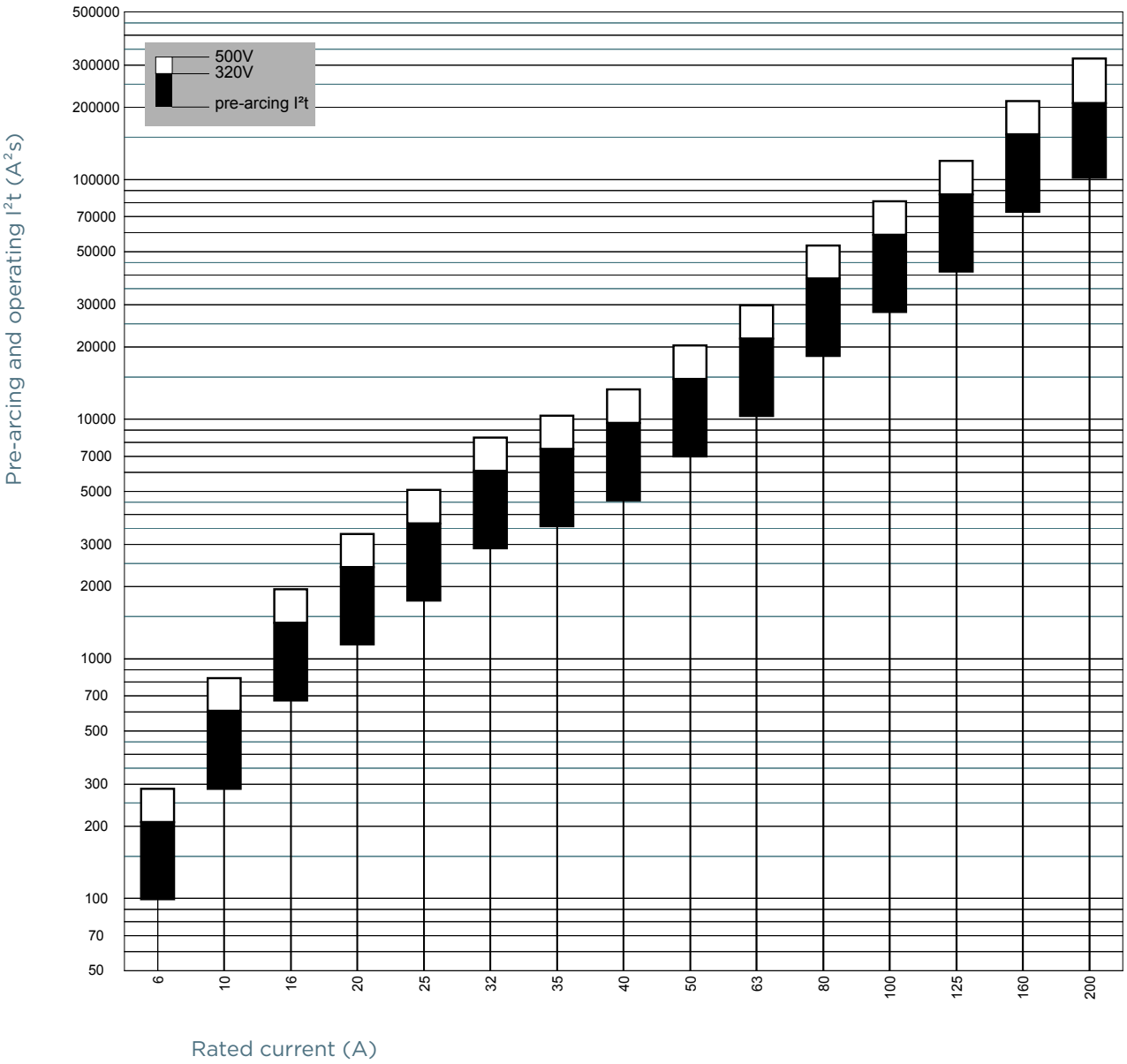

© 2021 Mersen. All rights reserved. Mersen reserves the right to change, adapt, limit or discontinue its products. Therefore the data provided herein are for information only and are not contractually binding. To ensure that Mersen provides the best solution to your needs, please contact and provide Mersen with all relevant technical specifications and conditions.

PRE-ARCING AND OPERATING I^2T CHARACTERISTICS

Size 1

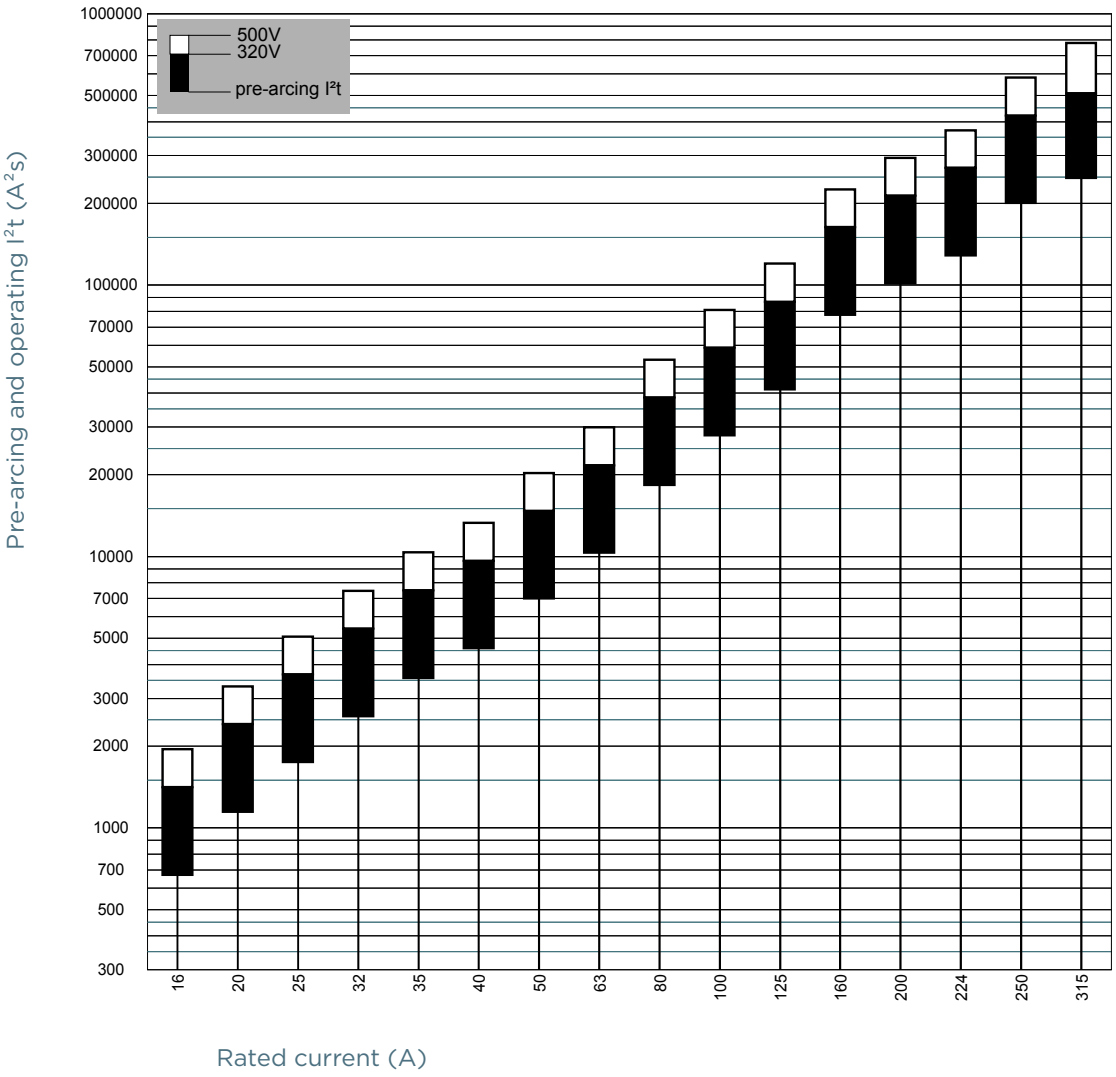

© 2021 Mersen. All rights reserved. Mersen reserves the right to change, adapt, limit or discontinue its products. Therefore the data provided herein are for information only and are not contractually binding. To ensure that Mersen provides the best solution to your needs, please contact and provide Mersen with all relevant technical specifications and conditions.

PRE-ARCING AND OPERATING I^2T CHARACTERISTICS

Size 2

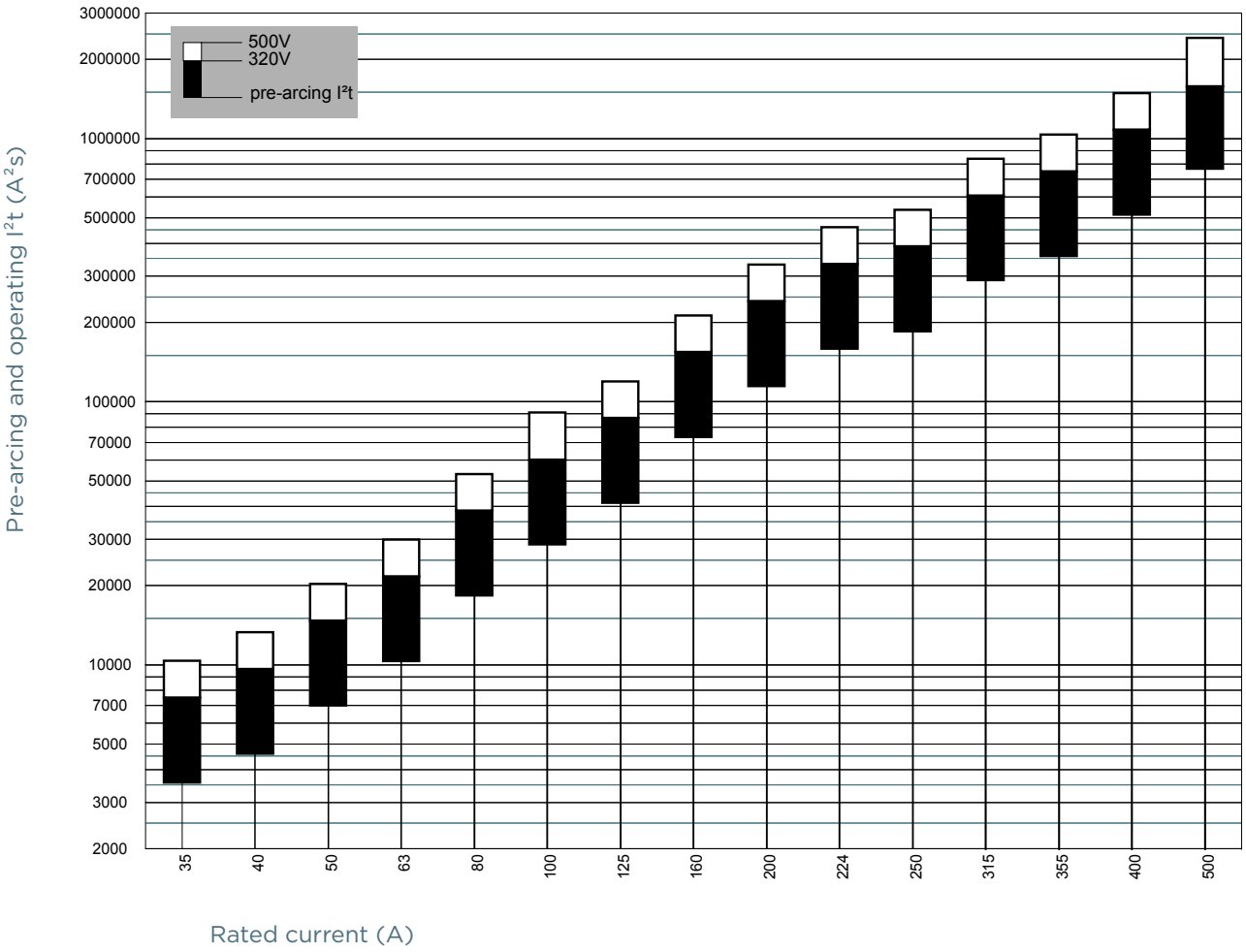

Size 3

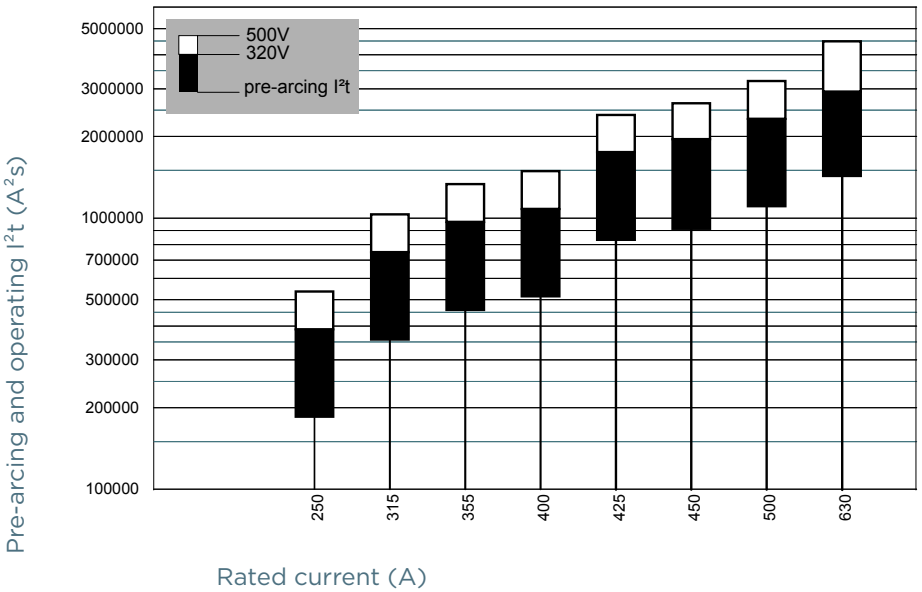

© 2021 Mersen. All rights reserved. Mersen reserves the right to change, adapt, limit or discontinue its products. Therefore the data provided herein are for information only and are not contractually binding. To ensure that Mersen provides the best solution to your needs, please contact and provide Mersen with all relevant technical specifications and conditions.

DIMENSIONS

size 000 with double indicator

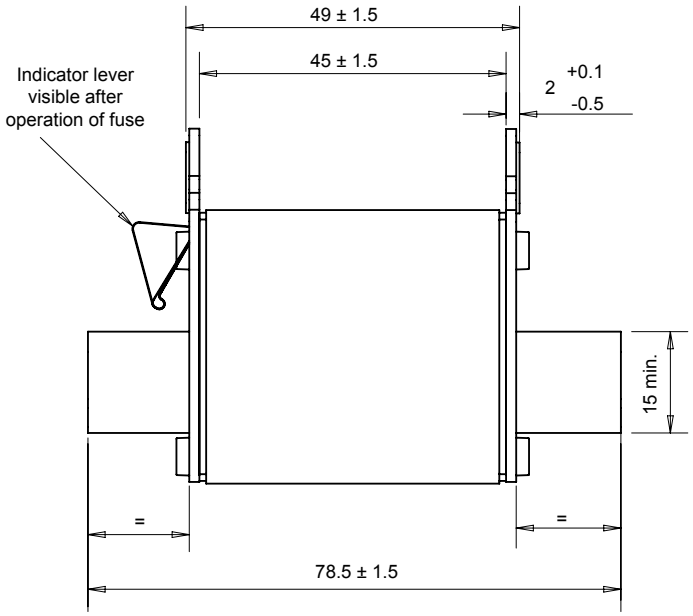

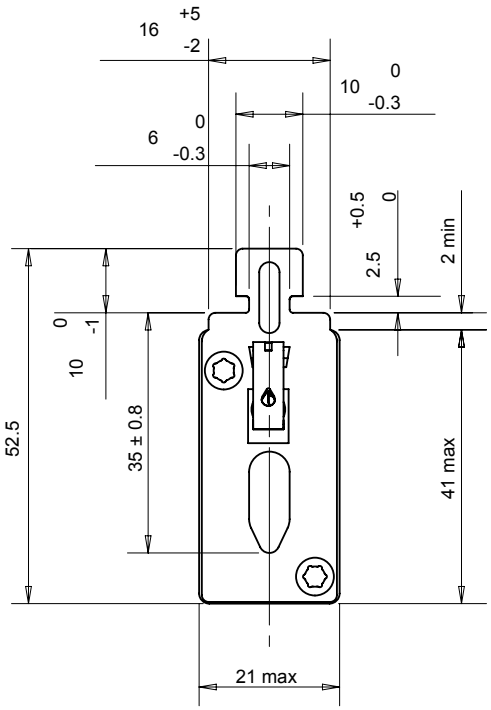

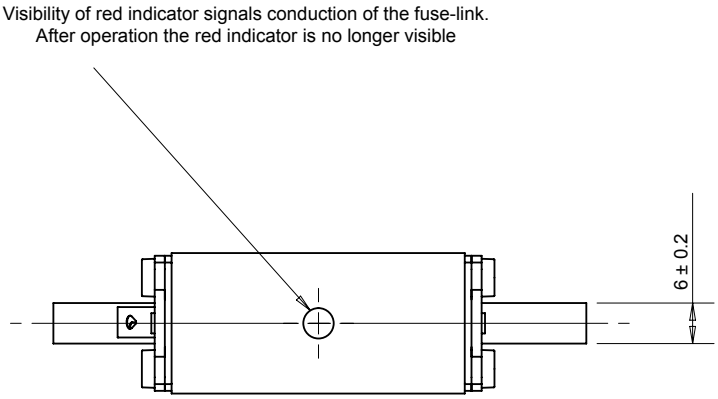

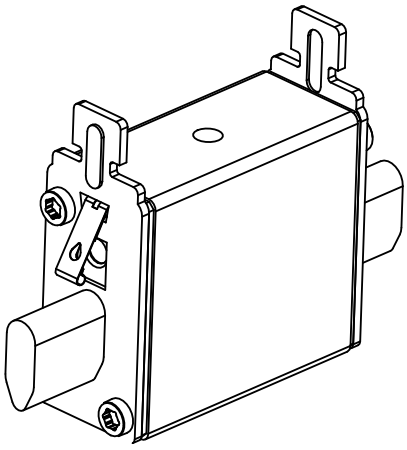

Dimensions in mm

© 2021 Mersen. All rights reserved. Mersen reserves the right to change, adapt, limit or discontinue its products. Therefore the data provided herein are for information only and are not contractually binding. To ensure that Mersen provides the best solution to your needs, please contact and provide Mersen with all relevant technical specifications and conditions.

DIMENSIONS

size 00 with double indicator

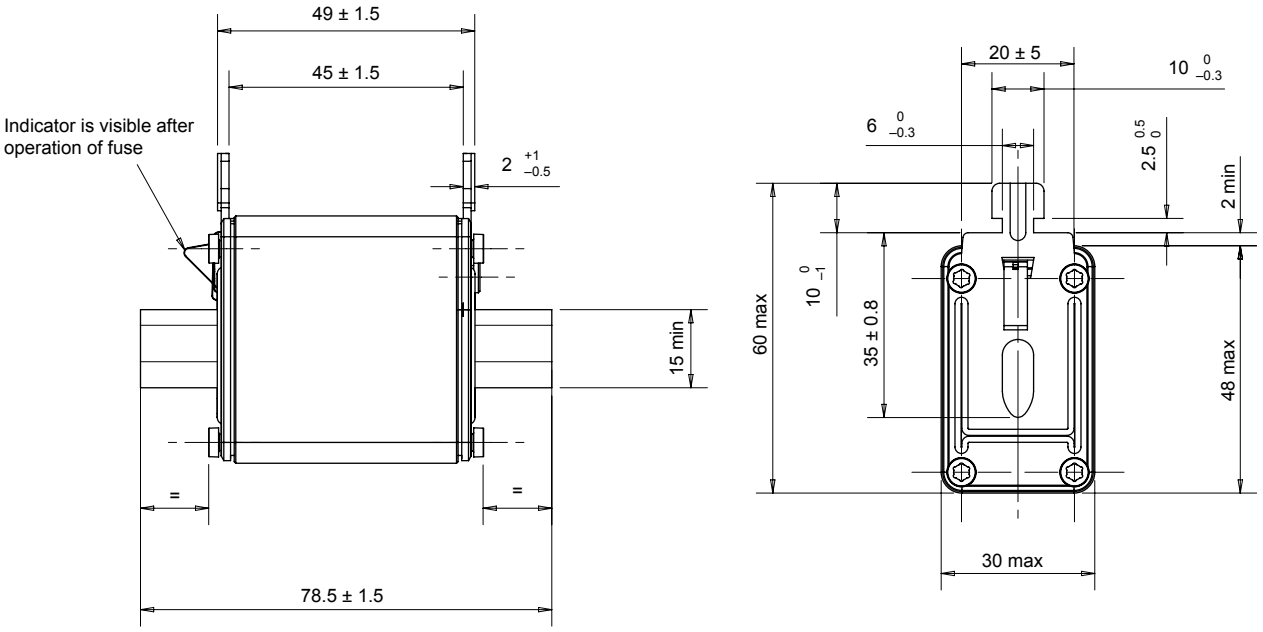

· Visibility of red indicator signals conduction of the fuse-link.
After operation the red indicator is no longer visible.

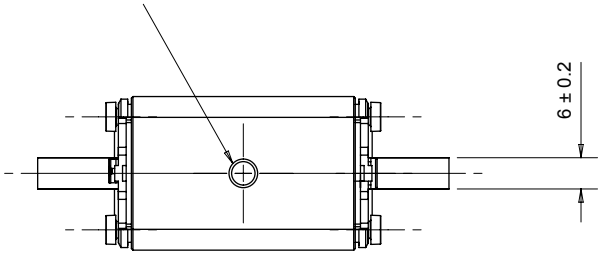

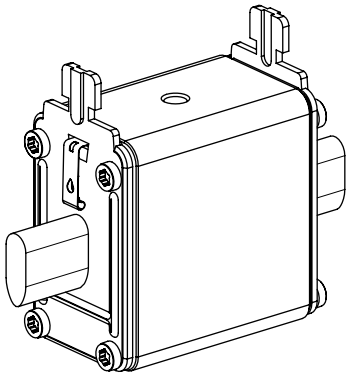

Dimensions in mm

© 2021 Mersen. All rights reserved. Mersen reserves the right to change, adapt, limit or discontinue its products. Therefore the data provided herein are for information only and are not contractually binding. To ensure that Mersen provides the best solution to your needs, please contact and provide Mersen with all relevant technical specifications and conditions.

DIMENSIONS

size 0 with double indicator

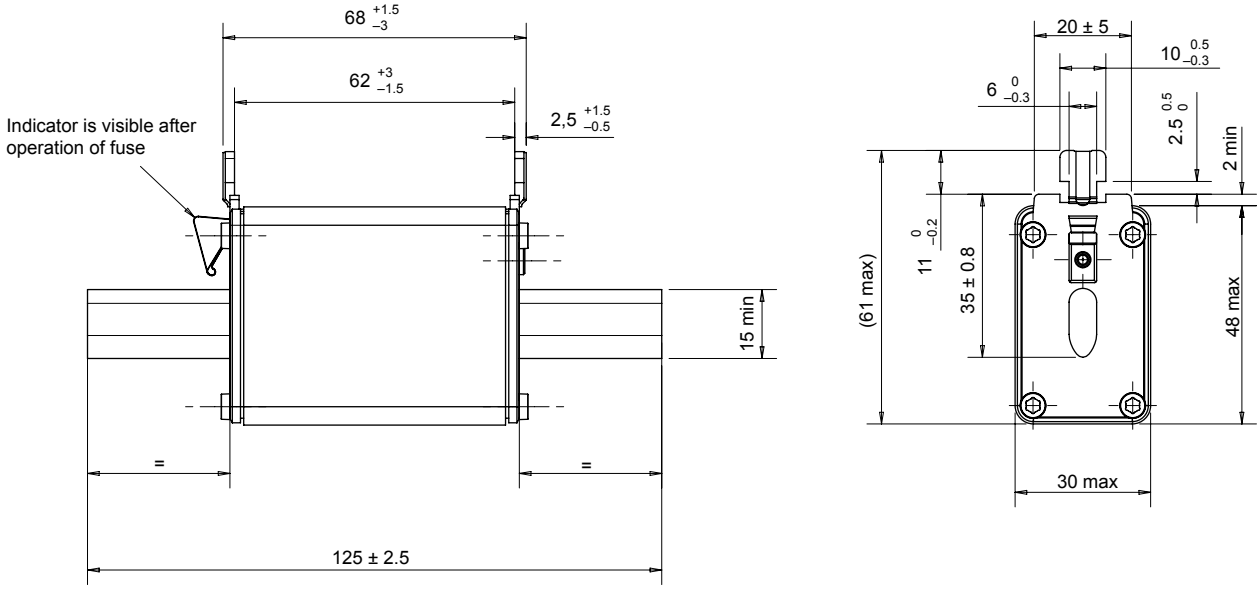

Visibility of red indicator signals conduction of the fuse-link.
After operation the red indicator is no longer visible.

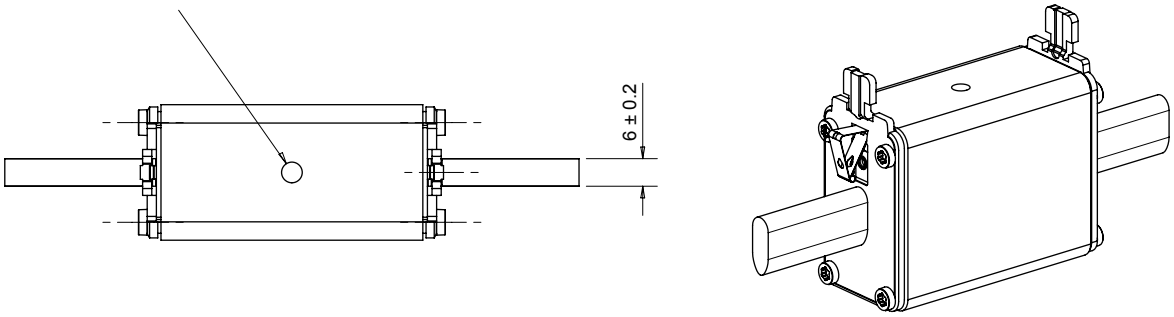

Dimensions in mm

© 2021 Mersen. All rights reserved. Mersen reserves the right to change, adapt, limit or discontinue its products. Therefore the data provided herein are for information only and are not contractually binding. To ensure that Mersen provides the best solution to your needs, please contact and provide Mersen with all relevant technical specifications and conditions.

DIMENSIONS

size 1 with double indicator

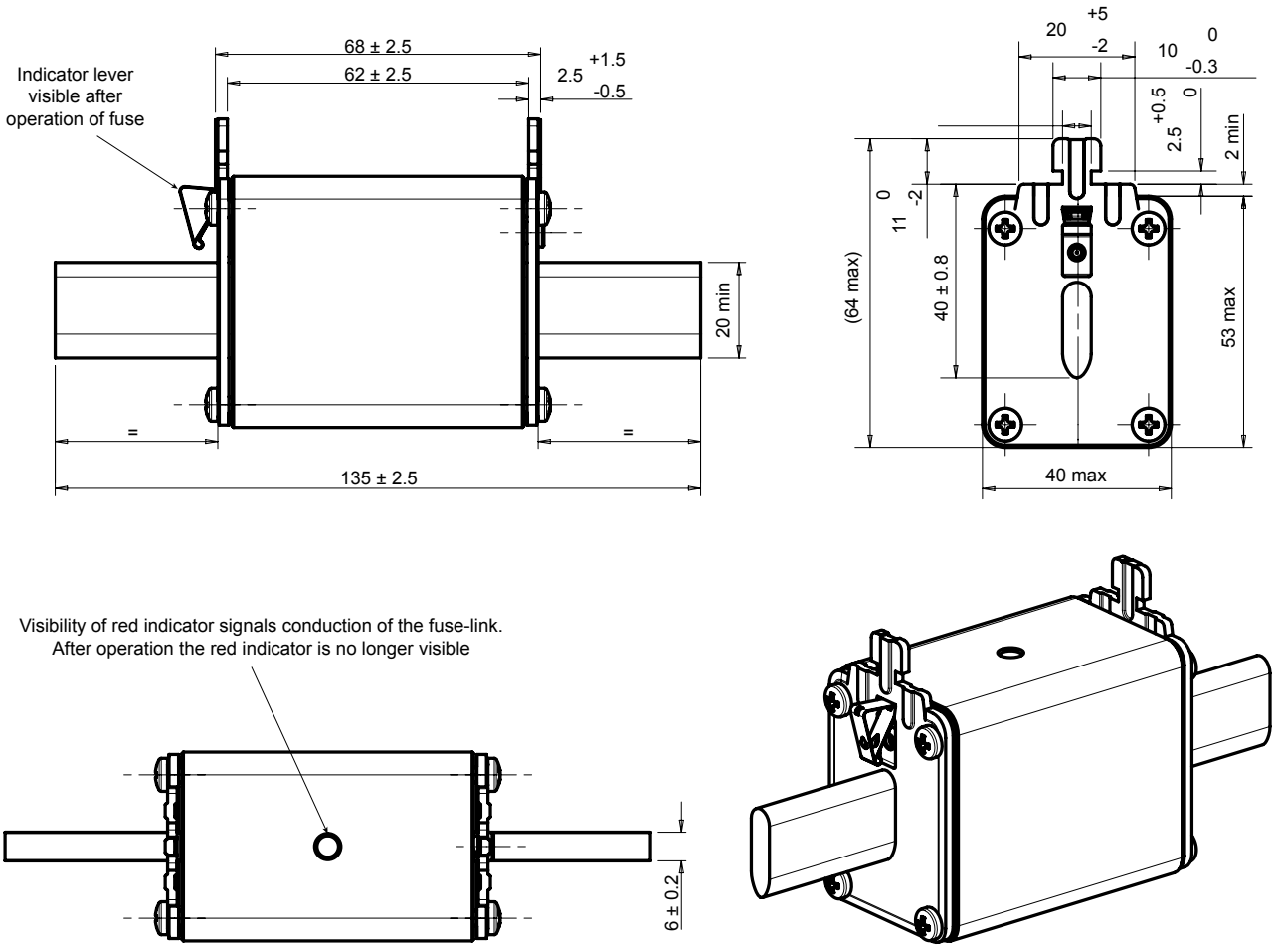

Dimensions in mm

© 2021 Mersen. All rights reserved. Mersen reserves the right to change, adapt, limit or discontinue its products. Therefore the data provided herein are for information only and are not contractually binding. To ensure that Mersen provides the best solution to your needs, please contact and provide Mersen with all relevant technical specifications and conditions.

DIMENSIONS

size 2 with double indicator

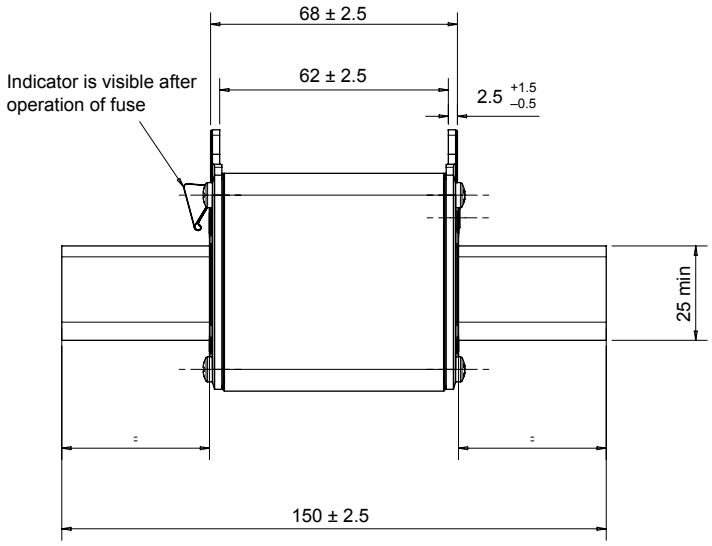

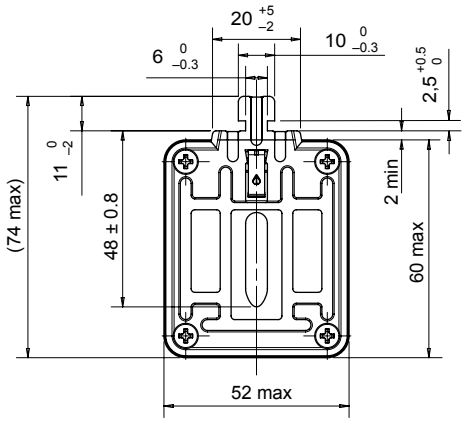

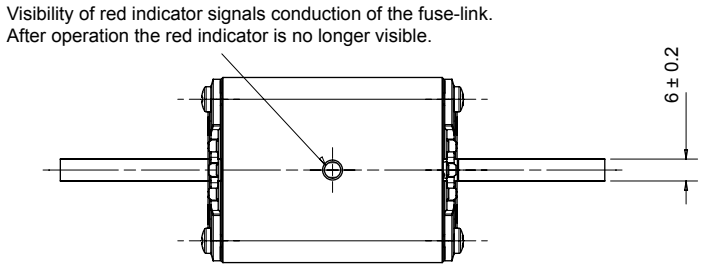

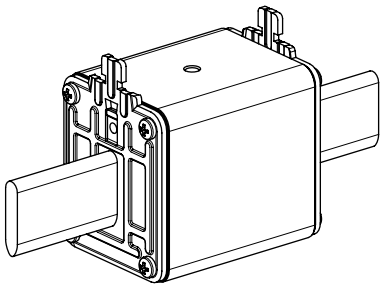

Dimensions in mm

© 2021 Mersen. All rights reserved. Mersen reserves the right to change, adapt, limit or discontinue its products. Therefore the data provided herein are for information only and are not contractually binding. To ensure that Mersen provides the best solution to your needs, please contact and provide Mersen with all relevant technical specifications and conditions.

DIMENSIONS

size 3 with double indicator

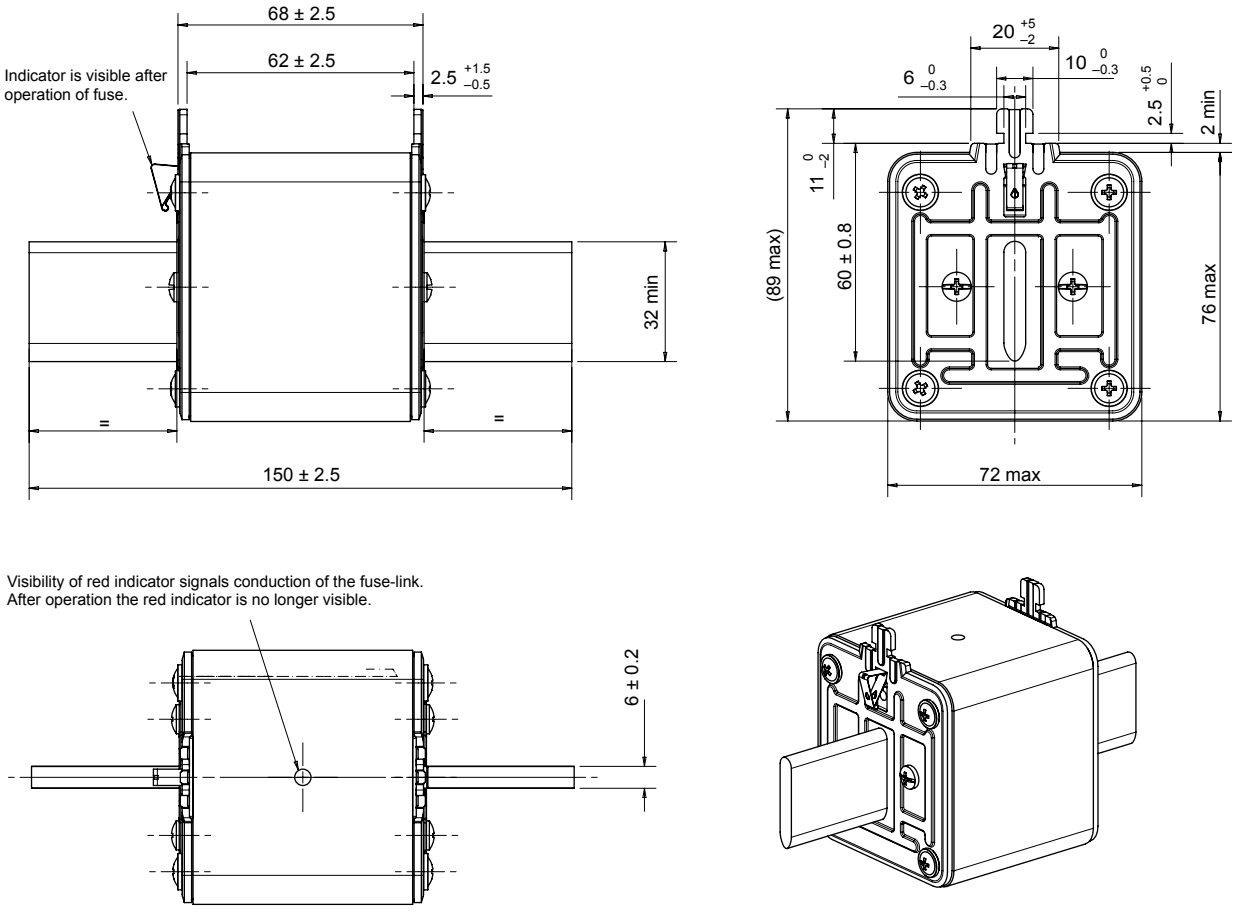

Dimensions in mm

© 2021 Mersen. All rights reserved. Mersen reserves the right to change, adapt, limit or discontinue its products. Therefore the data provided herein are for information only and are not contractually binding. To ensure that Mersen provides the best solution to your needs, please contact and provide Mersen with all relevant technical specifications and conditions.