Only **45 mm** Depth

EMR SERIES NETWORK ANALYZERS

MODERN, STYLISH, RELIABLE

Slim&Compact Design

Only 45mm depth,
IP51 protection class

Ghost Display

Clear and understandable impressions

Best User Experience

New simple, functional
menu design with 4 button



Individual Harmonics and High Accuracy

Up to 31st individual harmonics.
High accuracy Class for Voltage,
Current, 1 Class for Energy and Power*

IoT Compatible

Instant monitoring and remote
configuration via ENTES.NET
Log record (2MB internal mermory).*

Effective Alarm Management

Flexible alarm configurations, DI/DO
and alarm contact output.*

*Optional according to the device model

	EMR-04	EMR-04S	EMR-04SL	EMR-07	EMR-07L	EMR-07S	EMR-07SL	EMR-53	EMR-53S	EMR-53L	EMR-53SL	EMR-53CS
Enclosure												
Dimensions	96x96x44,5 mm											
Protection Class	Protection class Inside panel: IP20 Protection class Outside panel: IP51											
Display	4x4 LED Display											
MASUREMENT												
Voltage												
Measurement Range	X			Up to 300 VAC(VLN) /480 VAC(VLL)								
Accuracy	X			1%								
CURRENT												
Measurement Range	X			0,05-5,5 A								
Accuracy	X			1%								
Frequency												
Accuracy	X			±0.02 Hz								
Cosφ												
Accuracy	± 0.02											
Power												
Accuracy	1%											
Energy												
Accuracy	1%											
Harmonics												
THD V/I					X			√				
Individual					X			15	31			
SUPPLY												
Operating Voltage	100-270 VAC (-15%+10%)											
Operating Frequency	50-60 Hz											
OUTPUT STRUCTURE												
Run Hour Meter		√		X		√	Optional	X				√
Contact Output (Optonal)	X											2
DI/O		√	Optional	√	X	√	Optional	√		Optional		√
Memory												
Internal Memory	X	2MB	X	X		2MB	X		2MB	X		2MB
COMMUNICATION												
Communicaton Protocol	X	√	Optional	X		√	√	X	2MB	X	√	
AMBIENT CONDITIONS												
Operating Temperature	20+70°C											
Storing Temperature	-30+80°C											
Max Humidity	%95											
IP Protection	IP 51											
STANDARDS												
	EN 61326,61000-6-4,61000-6-2 emc EN 61010-1 Safety EN 60529 Mechanical EN 60068-2-1,60068-2-2 ,60068-2-30 Environmental											
CONNECTIONS												
Mounting	Front Panel Mounting											
Connection terminals	Screw Terminal with Socket											
Connection types	3P3W, 3P4W, Aron, 3P3W(B), 3P4W(B)											

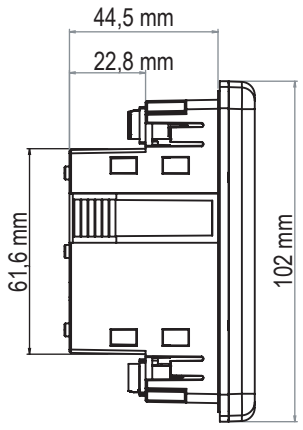

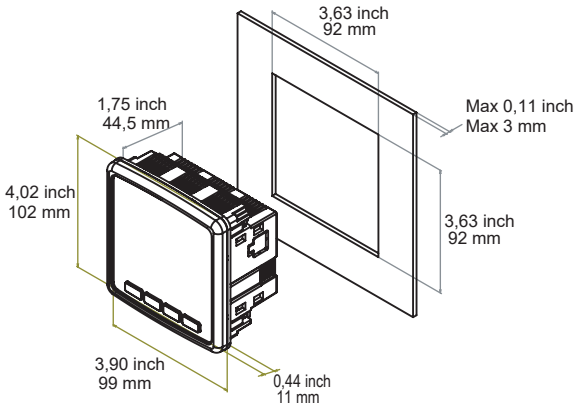

HEADQUARTERS
Address: Dudullu OSB; 1. Cadde; No: 23 34776 Umraniye - ISTANBUL / TURKEY **Tel:** +90 216 313 01 10 **Fax:** +90 216 314 16 15 **Sales Fax:** +90 216 365 71 71
E-mail: contact@entes.eu **Web:** www.entes.eu **Coordinates:** 40,995852 N, 29,178398 E

INTERNATIONAL BRANCH OFFICES
İSTANBUL : contact@entes.eu Tel: +90 216 313 01 10 Fax: +90 216 314 16 15
INDIA : contact@entes.in Tel: +91 129 - 2980004
GREECE : contact@entes.eu Tel: +30 2310 706999 +30 2310 707296
GERMANY : kontakt@enteselektronik.com Tel: +49(0) 7022-931992-0

© **ENTES Elektronik Cihazlar İmalat ve Ticaret A.Ş.**