finder®
SWITCH TO THE FUTURE

Time switches 16 A

- Heating and cooling
- Shop displays
- Lighting for parks
- Streetlights and car park lighting
- School bells



12 SERIES

FINDER reserves the right to alter characteristics at any time without notice. FINDER assumes no liability for damage to persons or property, caused as a result of the incorrect use or application of its products.

Mechanical time switches
- Daily time setting*
- Weekly time setting**

Type 12.01
- Daily
- 1 CO 16 A
- 35.8 mm wide
- 35 mm rail mount

Type 12.11
- Daily
- 1 NO 16 A
- 17.5 mm wide
- 35 mm rail mount

Type 12.31-0000
- Daily
- 1 CO 16 A
- 72 x 72 mm
- Front panel mount

Type 12.31-0007
- Weekly
- 1 CO 16 A
- 72 x 72 mm
- Front panel mount

• Minimum time interval setting:
1 h (12.31-0007)
30 min (12.01)
15 min (12.11 - 12.31-0000)

* Same program every day

** Different program possible for each of the 7 days of the week

For outline drawing see page 13

	12.01	12.11	12.31	
				
	• Mechanical daily time switch • 1 CO 16 A • 35 mm rail (EN 60715) mount	• Mechanical daily time switch • 1 NO 16 A • 35 mm rail (EN 60715) mount	• Mechanical daily or weekly • 1 CO 16 A • Front panel mounting	
	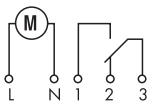	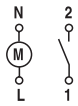	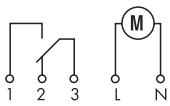	
Contact specification				
Contact configuration	1 CO (SPDT)	1 NO (SPST-NO)	1 CO (SPDT)	
Rated current/Maximum peak current A	16/—	16/30	16/—	
Rated voltage/ Maximum switching voltage V AC	250/—	250/—	250/—	
Rated load AC1 VA	4000	4000	4000	
Rated load AC15 (230 V AC) VA	750	420	420	
Nominal lamp rating:				
incandescent (230 V) W	2000 (NO contact)	2000	2000	
compensated fluorescent (230 V) W	750 (NO contact)	750	750	
uncompensated fluorescent (230 V) W	1000 (NO contact)	1000	1000	
halogen (230 V) W	2000 (NO contact)	2000	2000	
Minimum switching load mW (V/mA)	1000 (10/10)	1000 (10/10)	1000 (10/10)	
Standard contact material	$AgSnO_2$	$AgSnO_2$	AgCdO	
Supply specification				
Nominal voltage (U_N) V AC (50/60 Hz)	230	230	120 - 230	
V DC	—	—	—	
Rated power AC/DC VA (50 Hz)/W	2/—	2/—	2/—	
Operating range AC (50 Hz)	(0.85…1.1)U_N	(0.85…1.1)U_N	(0.85…1.1)U_N	
DC	—	—	—	
Technical data				
Electrical life at rated load in AC1 cycles	$50 \cdot 10^3$	$50 \cdot 10^3$	$50 \cdot 10^3$	
Type of time switch	daily	daily	daily	weekly
Switching intervals /day	48	96	96	24 (168/week)
Minimum switching interval min	30	15	15	60
Accuracy s/day	1.5	1.5	1.5	
Ambient temperature range °C	–5…+50	–5…+50	–10…+50	
Protection category	IP 20	IP 20	IP 20	
Approvals (according to type)	CE EAC			

XI-2017, www.findernet.com

Type 12.51
Digital (analogue-style) time switch, daily/weekly programming
- **Can be programmed in "Classic" mode via the joystick, or "Smart" mode via smartphones with NFC communication**
- Minimum time interval setting - 30 minutes
- Easily configurable for daily or weekly programming

Type 12.81
Digital Astro-switch
- **Can be programmed in "Classic" mode via the joystick, or "Smart" mode via smartphones with NFC communication**
- Astro program: calculation of sunrise and sunset times through date, time and location coordinates
- Option for Astro ON period override, by timeswitch
- Location coordinates easily settable for most European countries through post codes
- Offset function: allows programming of switching times offset from the astronomic time (by up to 90 min, in 10 min steps)

- Summer/Winter European, Australian, Brazilian time
- 1 CO 16 A output contact
- LCD status indication, set-up and programming
- Lock with a 4-digit PIN
- Back-light display
- Internal battery for set-up and programming without supply, easily replaceable from the front
- Protective separation between supply and contacts
- 35 mm wide
- 35 mm rail (EN 60715) mount
- Cadmium free contact material

For outline drawing see page 13

	12.51	12.81
		
	• Digital time switch • 1 CO 16 A	• Digital Astro-switch • 1 CO 16 A
	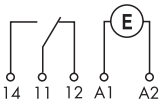	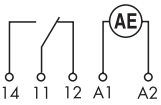
Contact specification		
Contact configuration	1 CO (SPDT)	1 CO (SPDT)
Rated current/Maximum peak current A	16/30 (120 A - 5 ms)	16/30 (120 A - 5 ms)
Rated voltage/ Maximum switching voltage V AC	250/400	250/400
Rated load AC1 VA	4000	4000
Rated load AC15 (230 V AC) VA	750	750
Nominal lamp rating:		
230 V incandescent/halogen W	2000	2000
fluorescent tubes with electronic ballast W	1000	1000
fluorescent tubes with electromechanical ballast W	750	750
CFL W	400	400
230 V LED W	400	400
LV halogen or LED with electronic ballast W	400	400
LV halogen or LED with electromechanical ballast W	800	800
Minimum switching load mW (V/mA)	1000 (10/10)	1000 (10/10)
Standard contact material	$AgSnO_2$	$AgSnO_2$
Supply specification		
Nominal voltage (U_N) V AC (50/60 Hz)	110…230	110…230
V DC	110…230	110…230
Rated power AC/DC VA (50 Hz)/W	2.8/0.9	2.8/0.9
Operating range V AC (50 Hz)	88…264	88…264
V DC	88…264	88…264
Technical data		
Electrical life at rated load in AC1 cycles	$100 \cdot 10^3$	$100 \cdot 10^3$
Switching intervals	48	—
Minimum switching interval min	30	—
Accuracy s/day	1	1
Ambient temperature range °C	–20…+50 (see page 9, diagram L12)	–20…+50 (see page 9, diagram L12)
Protection category	IP 20	IP 20
Approvals (according to type)	CE EAC	

XI-2017, www.findernet.com

Digital time switch, weekly programming
- **Can be programmed in "Classic" mode via the joystick, or "Smart" mode via smartphones with NFC communication**

Type 12.61
- 1 CO 16 A

Type 12.62
- 2 CO 16 A

- Functions:
  Switch ON, Switch OFF
  Pulse: 1s…59 min
- Minimum time interval setting - 1 minute
- Summer/Winter European, Australian, Brazilian time
- LCD status indication, set-up and programming
- Lock with a 4-digit PIN
- Back-light display
- Internal battery for set-up and programming without supply, easily replaceable from the front
- Protective separation between supply and contacts
- 35 mm wide
- 35 mm rail (EN 60715) mount
- Cadmium free contact material

For outline drawing see page 14

NEW **12.61**



- Weekly programming
- 1 CO 16 A
- Switch ON, Switch OFF, Pulse

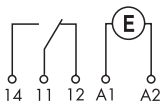

NEW **12.62**



- Weekly programming
- 2 CO 16 A
- Switch ON, Switch OFF, Pulse

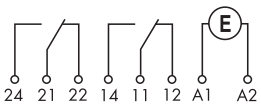

Contact specification				
Contact configuration		1 CO (SPDT)		2 CO (DPDT)
Rated current/Maximum peak current	A	16/30 (120 A - 5 ms)		16/30 (120 A - 5 ms)
Rated voltage/ Maximum switching voltage	V AC	250/400		250/400
Rated load AC1	VA	4000		4000
Rated load AC15 (230 V AC)	VA	750		750
Nominal lamp rating:				
230 V incandescent/halogen	W	2000		2000
fluorescent tubes with electronic ballast	W	1000		1000
fluorescent tubes with electromechanical ballast	W	750		750
CFL	W	400		400
230 V LED	W	400		400
LV halogen or LED with electronic ballast	W	400		400
LV halogen or LED with electromechanical ballast	W	800		800
Minimum switching load	mW (V/mA)	1000 (10/10)		1000 (10/10)
Standard contact material		$AgSnO_2$		$AgSnO_2$
Supply specification				
Nominal voltage (U_N)	V AC (50/60 Hz)	12…24	110…230	110…230
	V DC	12…24	110…230	110…230
Rated power AC/DC	VA (50 Hz)/W	2.8/0.9		2.8/0.9
Operating range	V AC (50 Hz)	10…30	88…253	88…253
	V DC	10…30	88…253	88…253
Technical data				
Electrical life at rated load in AC1	cycles	$100 \cdot 10^3$		$100 \cdot 10^3$
Type of time switch		Weekly		Weekly
Memory locations for switching times		50		50
Minimum internal setting	min	1		1
Accuracy	s/day	1		1
Ambient temperature range	°C	–20…+50 (see page 9, diagram L12)		–20…+50 (see page 9, diagram L12)
Protection category		IP 20		IP 20
Approvals (according to type)		CE EAC		

XI-2017, www.findernet.com

Weekly Astro time switch
- **Can be programmed in "Classic" mode via the joystick, or "Smart" mode via smartphones with NFC communication**
- **"Astro" program: calculation of sunrise and sunset times through date, time and location coordinates**

Type 12.A1
- 1 CO 16 A

Type 12.A2
- 2 CO 16 A

- Functions: "Astro" ON, "Astro" OFF Switch ON, Switch OFF Pulse: 1s…59 min
- Location coordinates easily settable for most European countries through Post codes
- Offest function: allows programming of switching times offset from the astronomic time (by up to 90 min, in 1 min step)
- Minimum time interval setting - 1 minute
- Summer/Winter European, Australian, Brazilian time
- LCD status indication, set-up and programming
- Lock with a 4-digit PIN
- Back-light display
- Internal battery for set-up and programming without supply, easily replaceable from the front
- Protective separation between supply and contacts
- 35 mm wide
- 35 mm rail (EN 60715) mount
- Cadmium free contact material

For outline drawing see page 14

NEW **12.A1**



- Weekly programming
- 1 CO 16 A
- Switch ON, Switch OFF, Pulse

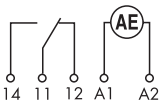

NEW **12.A2**



- Weekly programming
- 2 CO 16 A
- Switch ON, Switch OFF, Pulse

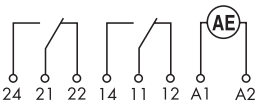

Contact specification				
Contact configuration		1 CO (SPDT)	2 CO (DPDT)	
Rated current/Maximum peak current	A	16/30 (120 A - 5 ms)	16/30 (120 A - 5 ms)	
Rated voltage/ Maximum switching voltage	V AC	250/400	250/400	
Rated load AC1	VA	4000	4000	
Rated load AC15 (230 V AC)	VA	750	750	
Nominal lamp rating:				
230 V incandescent/halogen	W	2000	2000	
fluorescent tubes with electronic ballast	W	1000	1000	
fluorescent tubes with electromechanical ballast	W	750	750	
CFL	W	400	400	
230 V LED	W	400	400	
LV halogen or LED with electronic ballast	W	400	400	
LV halogen or LED with electromechanical ballast	W	800	800	
Minimum switching load	mW (V/mA)	1000 (10/10)	1000 (10/10)	
Standard contact material		$AgSnO_2$	$AgSnO_2$	
Supply specification				
Nominal voltage (U_N)	V AC (50/60 Hz)	110…230	12…24	110…230
	V DC	110…230	12…24	110…230
Rated power AC/DC	VA (50 Hz)/W	2.8/0.9	2.8/0.9	
Operating range	V AC (50 Hz)	88…253	10…30	88…253
	V DC	88…253	10…30	88…253
Technical data				
Electrical life at rated load in AC1	cycles	$100 \cdot 10^3$	$100 \cdot 10^3$	
Type of time switch		Weekly	Weekly	
Memory locations for switching times		50	50	
Minimum internal setting	min	1	1	
Accuracy	s/day	1	1	
Ambient temperature range	°C	–20…+50 (see page 9, diagram L12)	–20…+50 (see page 9, diagram L12)	
Protection category		IP 20	IP 20	
Approvals (according to type)		CE EAC		

XI-2017, www.findernet.com

Electronic digital time switches
- 1 Weekly time setting

Type 12.71
- 1 CO 16 A
- 17.8 mm wide

- Minimum time interval setting - 1 minute
- Internal battery for set-up without supply
- Pulse output function:
  1 s… 59:59(mm:ss)
- Automatic adjustment for daylight saving
- 35 mm rail (EN 60715) mount

12.71



- Digital weekly time switch
- 1 CO 16 A
- 17.8 mm wide

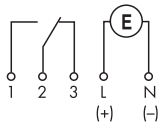

For outline drawing see page 13

Contact specification			
Contact configuration		1 CO (SPDT)	
Rated current/Maximum peak current	A	16/30	
Rated voltage/ Maximum switching voltage	V AC	250/—	
Rated load AC1	VA	4000	
Rated load AC15 (230 V AC)	VA	420	
Nominal lamp rating:			
230 V incandescent/halogen	W	400	
fluorescent tubes with electronic ballast	W	100	
fluorescent tubes with electromechanical ballast	W	100	
CFL	W	50	
230 V LED	W	50	
LV halogen or LED with electronic ballast	W	50	
LV halogen or LED with electromechanical ballast	W	100	
Minimum switching load	mW (V/mA)	1000 (10/10)	
Standard contact material		AgNi	
Supply specification			
Nominal voltage (U_N)	V AC (50/60 Hz)	—	230
	V AC/DC	24	—
Rated power AC/DC	VA (50 Hz)/W	1.4/1.4	2/—
Operating range	AC (50 Hz)	(0.9…1.1)U_N	(0.85…1.1)U_N
	DC	(0.9…1.1)U_N	—
Technical data			
Electrical life at rated load in AC1	cycles	$50 \cdot 10^3$	
Type of time switch		weekly	
Memory locations for switching times*		30	
Minimum switching interval	min	1	
Accuracy	s/day	0.5	
Ambient temperature range	°C	–30…+55	
Protection category		IP 20	
Approvals (according to type)		CE EAC	

* Switching times in memory may be used more than once i.e. when selected for different days.

XI-2017, www.findernet.com

Ordering information

Example: 12 series digital (analogue style) time switch, 1 CO 16 A contact, (110…230)V AC/DC supply

12.51.8.230.0000

Series

Type
0 = Daily, 35.8 mm wide
1 = Daily, 17.5 mm wide
3 = Daily or Weekly, 72 x 72 mm
5 = Digital (analogue style), NFC programming, 35 mm wide
6 = Weekly, NFC programming, 35 mm wide
7 = Weekly, 17.5 mm wide
8 = Astro-switch, NFC programming, 35 mm wide
A = Weekly "Astro", NFC programming, 35 mm wide

No. of poles
1 = 1 CO (SPDT), 16 A
1 = 1 NO (SPST), 16 A
2 = 2 CO (DPDT), 16 A

Supply version
0 = AC (50/60 Hz)/DC (types 12.61.0.024, 12.A2.0.024, 12.71.0.024)
8 = AC (50/60 Hz)
8 = AC (50/60 Hz)/DC (types 12.51, 12.81, 12.61, 12.62, 12.A1, 12.A2)

Supply voltage
024 = 24 V AC/DC (type 12.71)
024 = 12…24 V AC/DC (types 12.61, 12.A2)
120 = 120 V AC
230 = 230 V AC
230 = (110…230)V AC/DC (types 12.51, 12.61, 12.62, 12.81, 12.A1, 12.A2)

Option
0 = With power back-up
1 = Without power back-up (type 12.11)

Special version
0 = Standard

Option
0 = Standard
0 = Daily only for 12.31
7 = Weekly only for 12.31

Codes
12.01.8.230.0000
12.11.8.230.0000
12.11.8.230.1000
12.31.8.230.0000
12.31.8.230.0007
12.51.8.230.0000
12.71.0.024.0000
12.71.8.230.0000
12.81.8.230.0000
12.61.0.024.0000
12.61.8.230.0000
12.62.8.230.0000
12.A1.8.230.0000
12.A2.0.024.0000
12.A2.8.230.0000

XI-2017, www.findernet.com

Technical data

Insulation			12.51, 12.61, 12.62, 12.81, 12.A1, 12.A2		12.01, 12.11, 12.31, 12.71	
Dielectric strength between supply and contacts		V AC	4000		4000	
Dielectric strength between open contacts		V AC	1000		1000	
Rated impulse voltage (between supply and contacts)		kV/(1.2/50)µs	6		6	
Rated impulse voltage (between open contacts)		kV/(1.2/50)µs	1.5		1.5	
EMC specifications						
Type of test		**Reference standard**				
Electrostatic discharge	contact discharge	EN 61000-4-2	4 kV		6 kV	
	air discharge	EN 61000-4-2	8 kV		8 kV	
Radiated electromagnetic field (80…1000 MHz)		EN 61000-4-3	10 V/m		10 V/m	
Fast transients (burst 5/50 ns, 5 and 100 kHz)		EN 61000-4-4	4 kV		4 kV	
Voltage pulses on supply terminals (surge 1.2/50 µs)	common mode	EN 61000-4-5	4 kV		2 kV	
	differential mode	EN 61000-4-5	4 kV		2 kV	
Radiofrequency common mode voltage (0.15…80 MHz)		EN 61000-4-6	10 V		10 V	
Voltage dips	70% U_N , 40% U_N	EN 61000-4-11	10 cycles		10 cycles	
Short interruptions		EN 61000-4-11	10 cycles		10 cycles	
Radio frequency conducted emissions	0.15…30 MHz	EN 55014	class B		class B	
Radiated emissions	30…1000 MHz	EN 55014	class B		class B	
Terminals						
Screw torque		Nm	0.8		1.2	
Max. wire size			mm^2	AWG	mm^2	AWG
		solid cable	1 x 6 / 2 x 4	1 x 10 / 2 x 12	1 x 6 / 2 x 4	1 x 10 / 2 x 12
		stranded cable	1 x 4 / 2 x 2.5	1 x 12 / 2 x 14	1 x 6 / 2 x 2.5	1 x 10 / 2 x 14
Wire strip length		mm	9			
Other data						
Power back-up (Battery life)			6 years (12.51, 12.61, 12.62, 12.81, 12.A1, 12.A2, 12.71)			
Battery type			CR 2032, 3 V, 230 mAh (12.51, 12.61, 12.62, 12.81, 12.A1, 12.A2)			
Power back-up			100 h (12.01, 12.11, 12.31 - following 80 h continuous energisation)			
Power lost to the environment			**12.51, 12.61, 12.81, 12.A1**	**12.62, 12.A2**	**12.01, 12.11, 12.31**	**12.71**
		in stand-by W	0.2	0.2	—	—
		without contact current W	0.9	0.9	1.5	2
		with rated current W	1.5	2.1	2.5	3 (for 1 pole)

L 12 - Rated current v ambient temperature

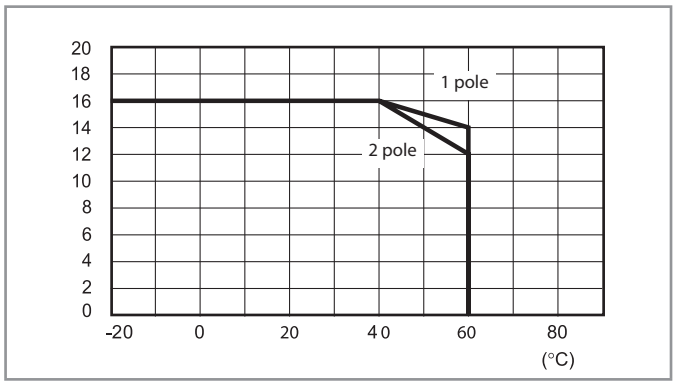

Wiring diagrams

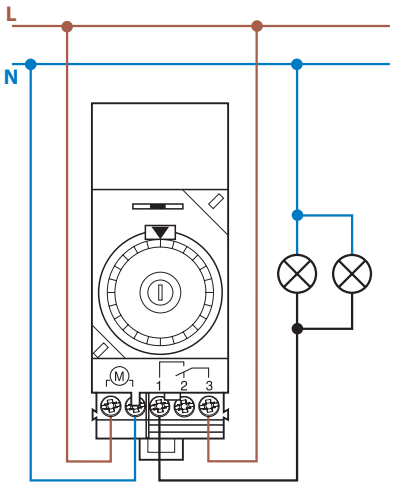

Type 12.01

Selector switch:

⏻ = Permanently OFF
AUTO = Automatic
I = Permanently ON

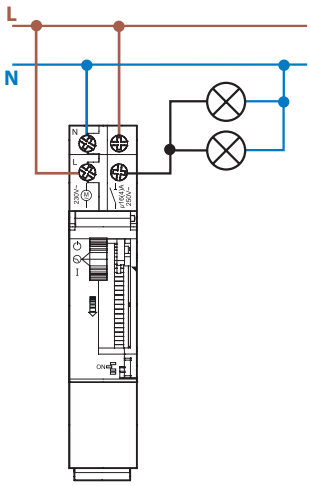

Type 12.11

Selector switch:

⏻ = Permanently OFF
⏲ = Automatic
I = Permanently ON

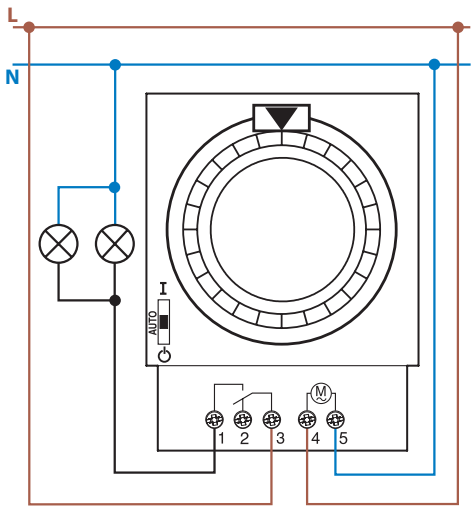

Type 12.31

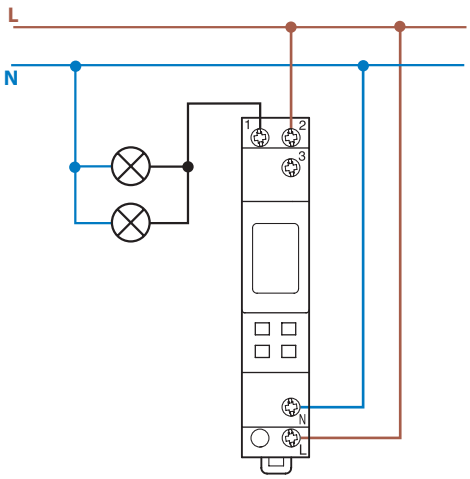

Type 12.71

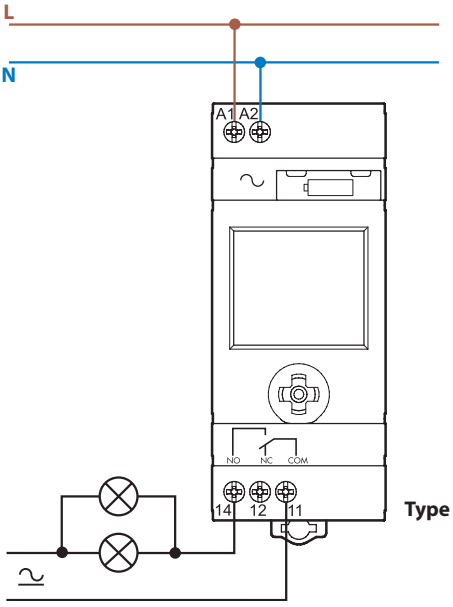

Type 12.51
12.81

XI-2017, www.findernet.com

Wiring diagrams

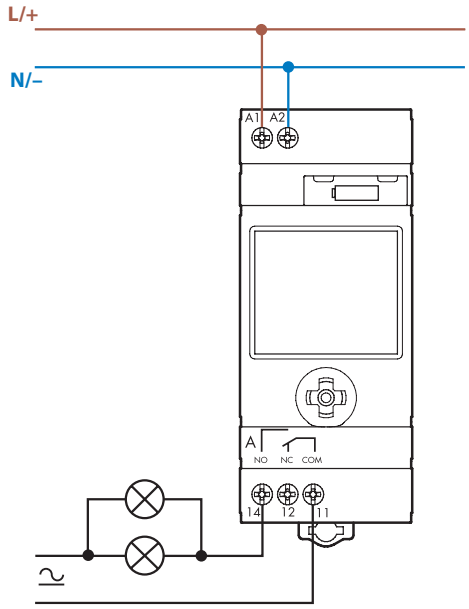

Type 12.61
12.A1

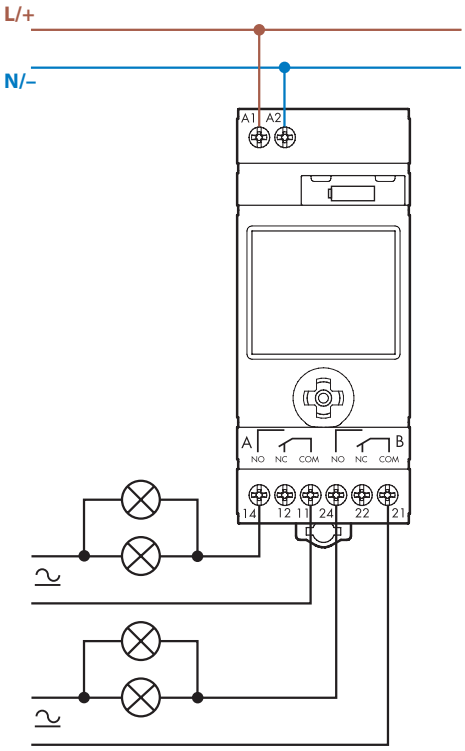

Type 12.62
12.A2

XI-2017, www.findernet.com

Two programming modes for type 12.51, 12.61, 12.62, 12.81, 12.A1, 12.A2



"Smart"

Mode via smartphones with NFC communication using Finder toolbox Android App.

NFC

"Classic"

Mode via the joystick

GET IT ON Google Play

Android, Google Play and the Google Play logo are trademarks of Google Inc.

Finder Toolbox

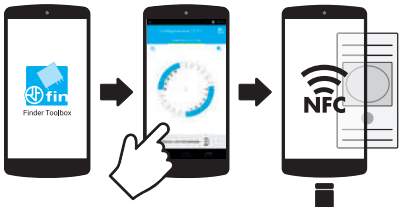





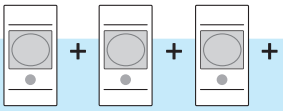

Finder Toolbox for programming

Once the App FINDER Toolbox is downloaded and installed, you can read an existing program, or program your device with maximum flexibility, changing the smallest details and saving your program directly to your smartphone.
At this point you simply touch the time switch with the smartphone to transfer the data.

Finder Toolbox for reference

Finder Toolbox provides all technical data sheets and news from Finder.

Functions type 12.81

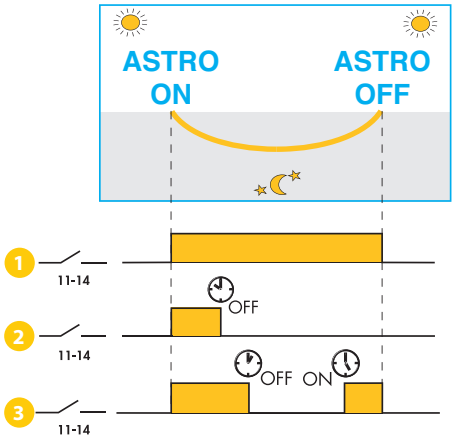

The Override feature permits the 12.81 three different ways of functioning:

1. Classic function where the **AstroON** and **AstroOFF** times are determined by the geographic coordinates. These times vary every day.
2. Functions such that the output turns on according to the **AstroON** time and turns off according to the clock off-time OFF. Application example: shop window lighting on by **AstroON** at sunset and off OFF at 00:30 .
3. Functions such that the output turns on according to the **AstroON** time and turns off a ccording to the clock off-time OFF, and then turns back on at the clock on-time ON (for the remainder of the ASTRO time period). Application example: company car park lighting, on by **AstroON** at sunset, off end of the evening shift at 23:00 OFF.
   On again at the beginning of the morning shift at 5:00 ON and off automatically by **AstroOFF***.

* Depending on the time of year (summer specifically) it may be that the override ON time will fall after the AstroOFF time. In this case, the output switches off at the AstroOFF time and the override ON time is ignored.

XI-2017, www.findernet.com

Outline drawings

12.01
Screw terminal

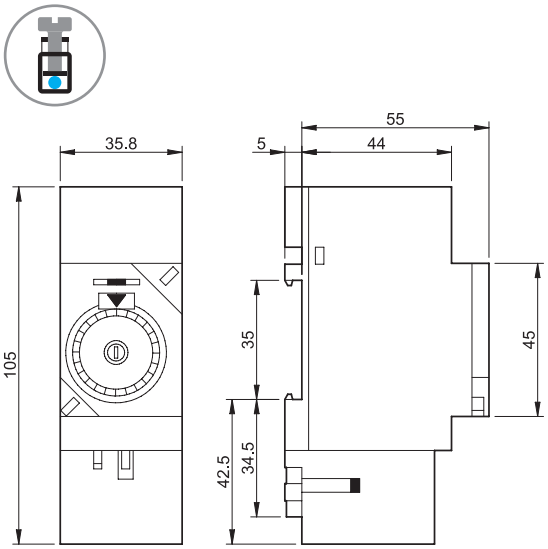

12.11
Screw terminal

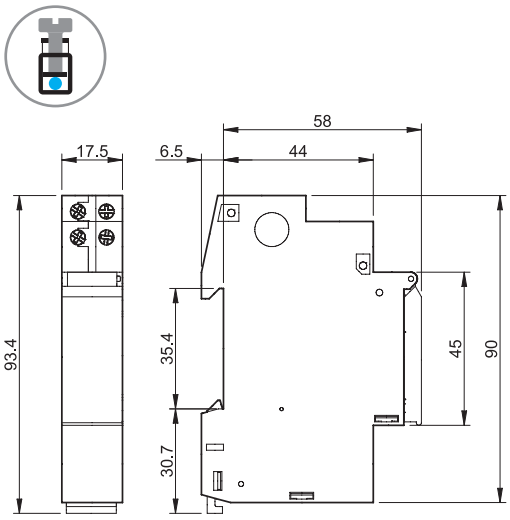

12.31
Screw terminal

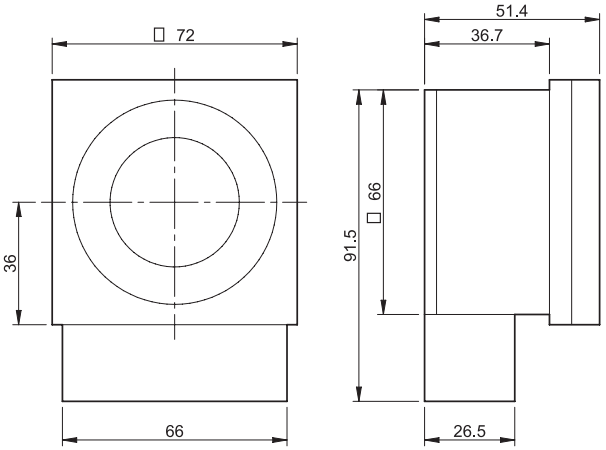

12.51/12.81
Screw terminal

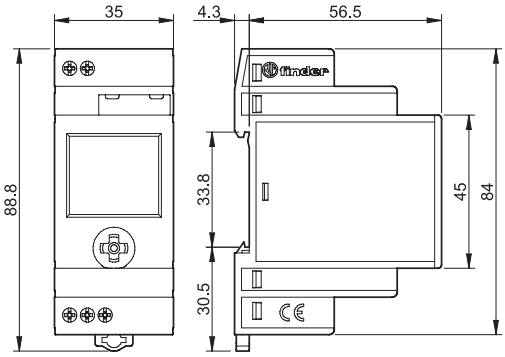

12.71
Screw terminal

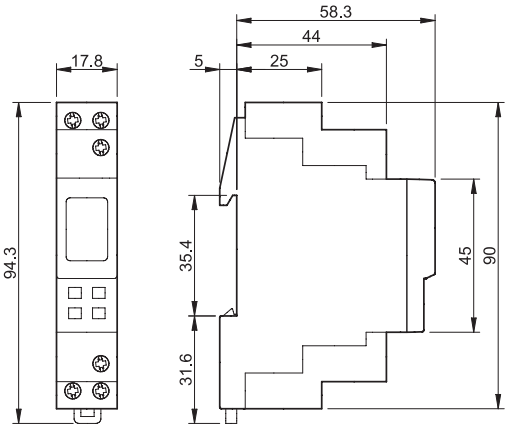

XI-2017, www.findernet.com

Outline drawings

12.61 / 12.A1
Screw terminal



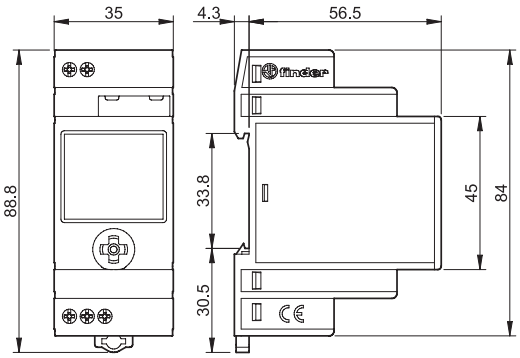

12.62 / 12.A2
Screw terminal



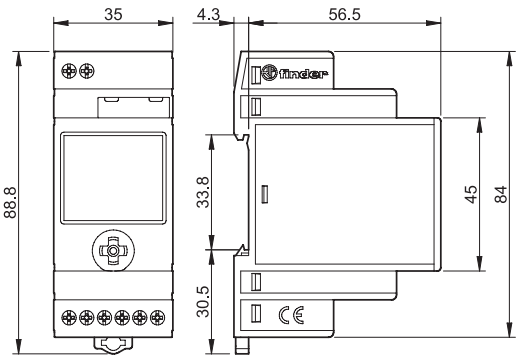

Battery replacement type 12.51, 12.61, 12.62, 12.81, 12.A1, 12.A2

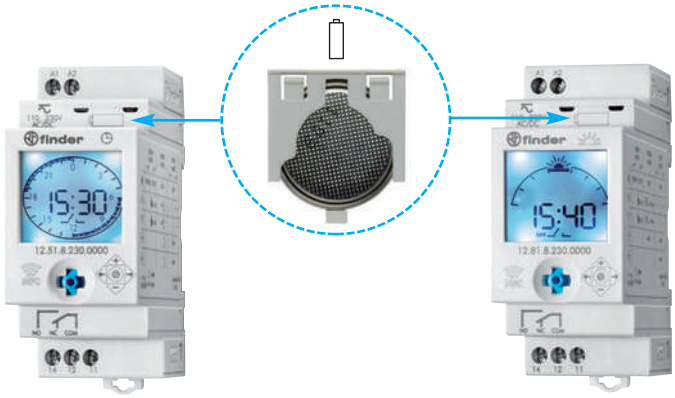

Power-save mode

If the 230 V AC supply is not connected, the time switch enters power-save mode: only the clock is maintained active whilst the display turns off so as to guarantee a long life for the built-in back-up battery.
With a press to the joystick it is possible to "awake" the device and enter Display mode (with the "plug" symbol displayed). A further press to ◎ will enter the program or set-up mode as explained in the Display mode section above.
After about 1 minute of inactivity the power-save mode will start again. During program or set-up the current absorption is higher than in power-save mode, thus influencing the battery life.
In this mode the display back-light is not active. It is activated following a press to the joystick only with the 230 V AC supply connected, but after about 1 minute of inactivity the display back-light will turn off, and to activate it again it is necessary to press the joystick again.
Note: the output relay only functions if the power supply is connected.

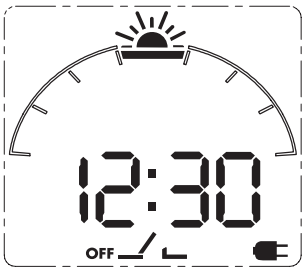

Accessories type 12.51, 12.61, 12.62, 12.81, 12.A1, 12.A2

Adaptor for panel mounting, 35 mm wide	011.01



011.01

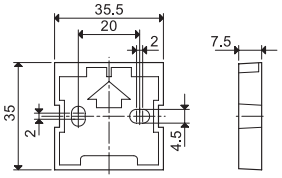

XI-2017, www.findernet.com

Please see general technical information