IF5888

Inductive sensor

IFB2004BBROG/UP/3M/PH

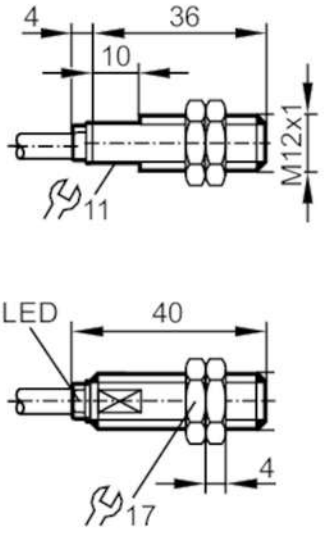

Product characteristics		
Electrical design		PNP/NPN
Output function		normally closed
Sensing range	[mm]	4
Housing		threaded type
Dimensions	[mm]	M12 x 1 / L = 40
Application		
Special feature		Increased sensing range
Electrical data		
Operating voltage	[V]	10...36 DC
Protection class		II
Reverse polarity protection		no
Outputs		
Electrical design		PNP/NPN
Output function		normally closed
Max. voltage drop switching output DC	[V]	5
Minimum load current	[mA]	2
Max. leakage current	[mA]	1
Permanent current rating of switching output DC	[mA]	100
Switching frequency DC	[Hz]	110
Short-circuit protection		no
Overload protection		no
Detection zone		
Sensing range	[mm]	4

IF5888

Inductive sensor

IFB2004BBROG/UP/3M/PH

Real sensing range Sr	[mm]	4 ± 10 %	
Operating distance	[mm]	0...3.25	
Increased sensing range		yes	
Accuracy / deviations			
Correction factor		steel: 1 / stainless steel: 0.7 / brass: 0.4 / aluminium: 0.4 / copper: 0.3	
Hysteresis	[% of Sr]	3...15	
Switch point drift	[% of Sr]	-10...10	
Operating conditions			
Ambient temperature	[°C]	-25...70	
Protection		IP 67	
Tests / approvals			
EMC		EN 60947-5-2	
		EN 55011	class B
MTTF	[years]	2764	
Mechanical data			
Weight	[g]	89.5	
Housing		threaded type	
Mounting		flush mountable	
Dimensions	[mm]	M12 x 1 / L = 40	
Thread designation		M12 x 1	
Materials		brass white bronze coated; PBT	
Displays / operating elements			
Display		switching status	1 x LED, yellow
Accessories			
Items supplied		lock nuts: 2	
Remarks			
Pack quantity		1 pcs.	
Electrical connection			

Cable: 3 m, PUR / PVC; 2 x 0.34 mm²

Connection

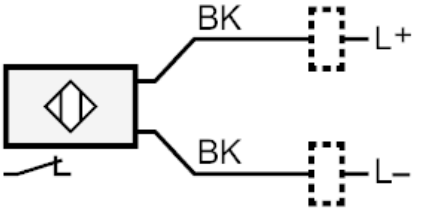

	Core colours :
BK =	black