R2S133-AE17-05

AC centrifugal fan

backward curved, single inlet



ebm-papst Mulfingen GmbH & Co. KG
Bachmühle 2
D-74673 Mulfingen
Phone: +49(0)7938/81-0
Fax: +49(0)7938/81-110
info1@de.ebmpapst.com
www.ebmpapst.com

Nominal data

Type	**R2S133-AE17-05**
Motor	**M2S052-CA**

Phase		1~	1~
Nominal voltage	[V]	230	230
Frequency	[Hz]	50	60
Type of data definition		rfa	rfa
Valid for approval / standard		CE	CE
Speed	[min^{-1}]	2780	3200
Power input	[W]	36	34
Current draw	[A]	0.25	0.21
Min. back pressure	[Pa]	0	0
Max. ambient temperature	[°C]	40	60

ml = max. load · me = max. efficiency · rfa = running at free air · cs = customer specs · cu = customer unit
Subject to alterations

AC centrifugal fan

backward curved, single inlet

Technical features

Leackage current	< 0.75 mA
Size	133 mm
Operation mode	S1
Direction of rotation	Clockwise, seen on rotor
Mounting position	Shaft horizontal or rotor on bottom; rotor on top on request
Insulation class	"B"
Cable exit	Axial
Condensate discharge holes	Rotor-side
Bearing motor	Ball bearing
Mass	0.9 kg
Material of impeller	PA plastic 6, fiberglass-reinforced
Motor protection	Thermal overload protector (TOP) wired internally
Product conforming to standard	CE; EN 60335-1
Surface of rotor	Coated in black
Number of blades	7
Type of protection	IP 22; Depending on installation and position
Protection class	I
Max. permissible ambient motor temp. (transp./ storage)	+ 80 °C
Min. permissible ambient motor temp. (transp./storage)	- 40 °C
Approval	CCC

ebm-papst Mulfingen GmbH & Co. KG · Bachmühle 2 · D-74673 Mulfingen · Phone: +49(0)7938/81-0 · Fax: +49(0)7938/81-110 · info1@de.ebmpapst.com · www.ebmpapst.com

AC centrifugal fan

backward curved, single inlet

Product drawing

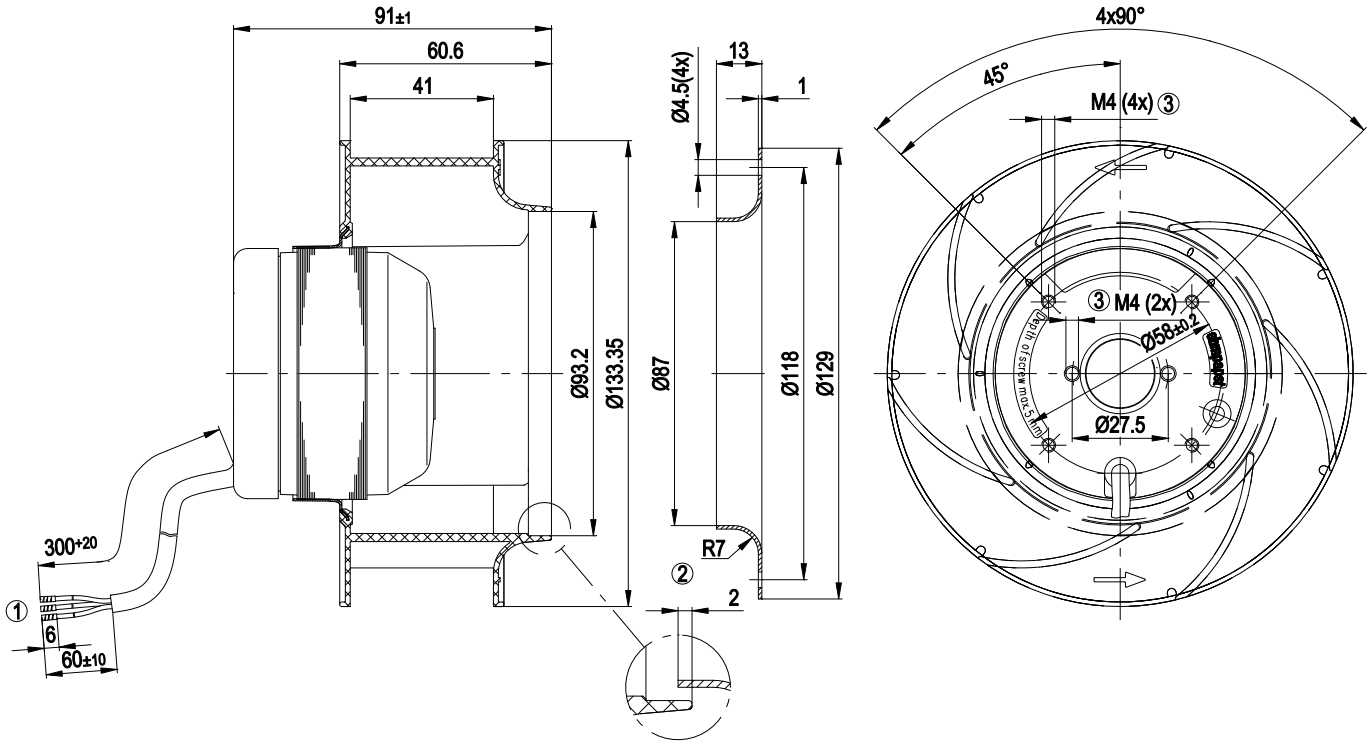

1	Connection line PVC, 3x brass lead tips crimped
2	Accessory part: Inlet nozzle 09566-2-4013, not included in the standard scope of delivery
3	Screw depth max. 5 mm

Connection screen

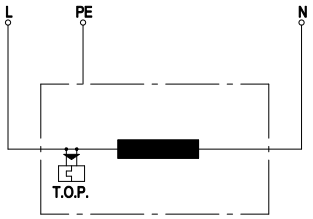

L	= blue
PE	= green / yellow
N	= brown
TOP	= Thermal overload protector

ebm-papst Mulfingen GmbH & Co. KG · Bachmühle 2 · D-74673 Mulfingen · Phone: +49(0)7938/81-0 · Fax: +49(0)7938/81-110 · info1@de.ebmpapst.com · www.ebmpapst.com

AC centrifugal fan

backward curved, single inlet

Charts: Air flow 50 Hz

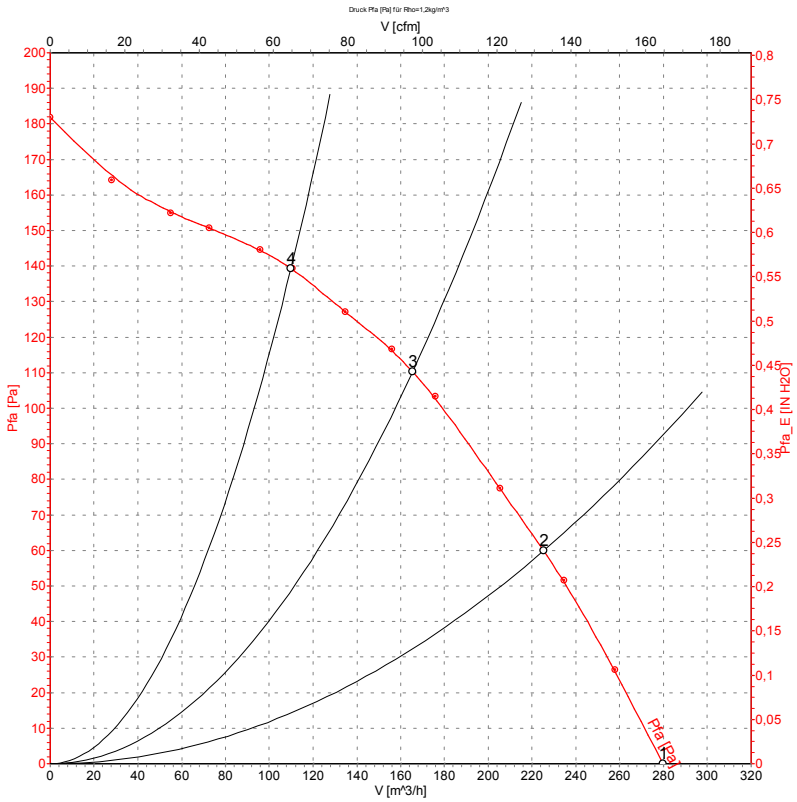

Measurement: LU-54609

Measured values

	U	f	n	P_1	I	$\dot{V}$	p_{fa}
	[V]	[Hz]	[min^{-1}]	[W]	[A]	[m^3/h]	[Pa]
1	230	50	2780	36	0.25	280	0
2	230	50	2715	38	0.24	225	60
3	230	50	2720	38	0.24	165	110
4	230	50	2735	38	0.24	110	140

ebm-papst Mulfingen GmbH & Co. KG · Bachmühle 2 · D-74673 Mulfingen · Phone: +49(0)7938/81-0 · Fax: +49(0)7938/81-110 · info1@de.ebmpapst.com · www.ebmpapst.com

AC centrifugal fan

backward curved, single inlet

Charts: Air flow 60 Hz

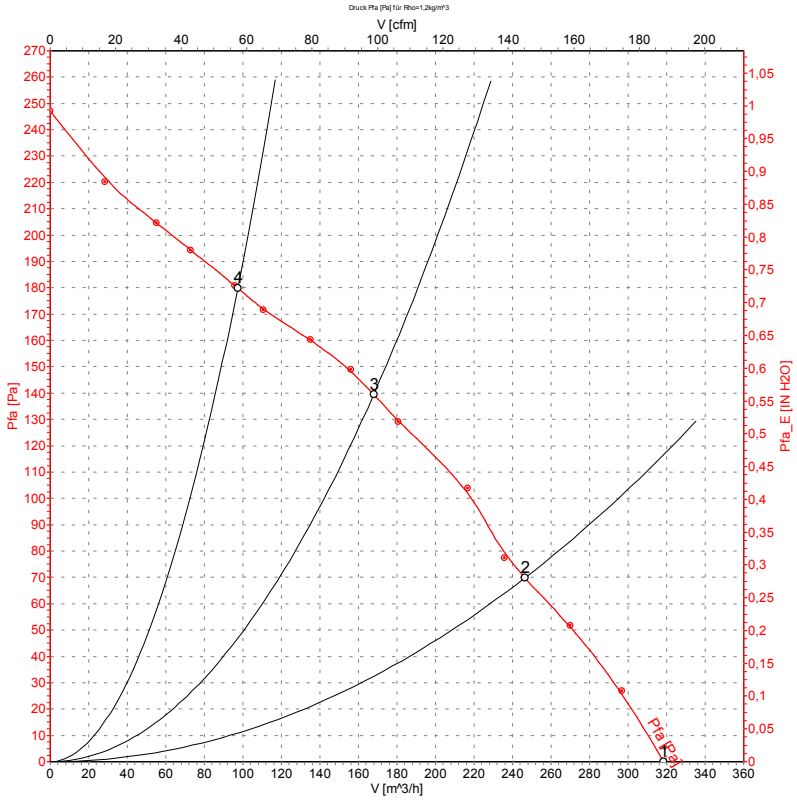

Measurement: LU-54610

Measured values

	U	f	n	P_1	I	$\dot{V}$	p_{fa}
	[V]	[Hz]	[min^{-1}]	[W]	[A]	[m^3/h]	[Pa]
1	230	60	3150	34	0.21	320	0
2	230	60	2970	39	0.22	245	70
3	230	60	2960	40	0.23	170	139
4	230	60	3060	37	0.22	95	180

ebm-papst Mulfingen GmbH & Co. KG · Bachmühle 2 · D-74673 Mulfingen · Phone: +49(0)7938/81-0 · Fax: +49(0)7938/81-110 · info1@de.ebmpapst.com · www.ebmpapst.com