OMRON

PCB Relay

G6RL

Low-profile power relay with maximum switching of 8 A

- Low profile: 12.3 mm in height
- Max. switching capacity: 2,500 VA (NO)
- Dielectric strength: 5 kV
- Clearance and creepage distance: 10 mm.

RoHS Compliant

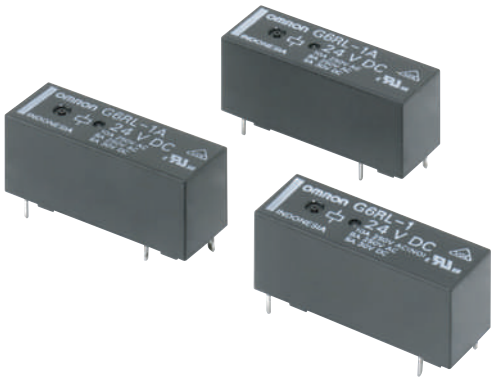

Applications:

Boilers, PLCs, I/O ports, timers, and temperature controllers

Ordering Information

Classification	Enclosure rating	Contact form	Model
Standard	Flux protection	SPST-NO	G6RL-1A
		SPDT	G6RL-1

Note: When ordering, add the rated coil voltage to the model number.

Examples: G6RL-1A 12 VDC
└ Rated coil voltage

■ Model Number Legend:

G6RL-□ □ □VDC
1 2 3

1. **Number of Poles**
   1: 1 pole
2. **Contact Form/Contact Construction**
   None: SPDT
   A: SPST-NO
3. **Rated Coil Voltage**
   3, 5, 6, 12, 24, 48 VDC

Specifications

■ Coil Ratings

Rated voltage	3 VDC	5 VDC	6 VDC	12 VDC	24 VDC	48 VDC
Rated current	73.3 mA	44.0 mA	36.7 mA	18.3 mA	9.2 mA	5.0 mA
Coil resistance	40 Ω	113 Ω	163 Ω	654 Ω	2,618 Ω	9,600 Ω
Must operate voltage	70% max. of rated voltage					
Must release voltage	10% min. of rated voltage					
Max. voltage	150% of rated voltage					
Power consumption	Approx. 220 mW					Approx. 240 mW

Note: **1.** The above items are measured at a coil temperature of 23°C.
2. The tolerance of the rated current is ±10%.

■ Contact Ratings

Load	Resistive load (cos ϕ = 1)
Rated load	8 A at 250 VAC, resistive load 5 A at 24 VDC, resistive load
Rated carry current	10 A at 250 VAC 5 A at 30 VDC
Max. switching voltage	400 VAC, 300 VDC
Max. switching current	NO: 10 A, NC: 8 A
Max. switching power	NO: 2,500 VA, NC: 2,000 VA 150 W
Failure rate (reference value)	10 mA at 5 VDC (P Level)

Note: P level: $\lambda 60 = 0.1 \times 10^{-6}$ / operations

■ Characteristics

Contact resistance	100 mΩ max.
Operate time	10 ms max.
Release time	5 ms max.
Insulation resistance	1,000 MΩ min. (at 500 VDC)
Dielectric strength	5,000 VAC, 50/60 Hz for 1 min between coil and contacts 1,000 VAC, 50/60 Hz for 1 min between contacts of same polarity
Impulse withstand voltage	10 kV between coil and contacts (1.2 × 50 μs)
Vibration resistance	Destruction: 10 to 55 to 10 Hz, 1.5-mm double amplitude Malfunction: 10 to 55 to 10 Hz, 0.825-mm single amplitude (1.65-mm double amplitude) when energized. 10 to 55 to 10 Hz, 0.4-mm single amplitude (0.8-mm double amplitude) when not energized.
Shock resistance	Destruction: 1,000 m/s^2 Malfunction: 200 m/s^2 NO, 50 m/s^2 NC when not energized
Endurance (Mechanical)	10,000,000 operations min. (at 18,000 operations/h)
Ambient temperature	Operating: –40°C to 85°C (with no icing)
Ambient humidity	Operating: 5% to 85%
Weight	Approx. 7.8 g

■ Other data

Insulation material group	IIIa	
Rated insulation voltage	250 V	
Pollution degree	3	2
Rated voltage system	250 V	400 V
Over-voltage category	III	
Contact material	AgNi	
Creepage distance	10 mm	
Clearance distance	10 mm	
RoHS	Compliant	
Tracking index of relay base	PTI 250	
Flammability class according to UL94	V-0	
Flammability-flame **GWFI (IEC 60695-2-12)** **GWIT (IEC 60695-2-13)**	 850°C 750°C	
Ball pressure test (IEC 60695-10-2)	170°C	

■ Approved Standards

UL 508 (File No. E41643)

Model	Contact form	Coil rating	Contact rating	
G6RL-1A	SPST-NO	3 to 48 VDC	10 A at 250 VAC (NO) 8 A at 250 VAC 5 A at 30 VDC	6,000 operations
G6RL-1	SPDT			

VDE (EN61810-1) (Reg. No. C266)

Model	Contact form	Coil rating	Contact rating	
G6RL-1A	SPST-NO	3, 5, 6, 12, 24, or 48 VDC	10 A at 250 VAC (NO)	10,000 operations at 85°C
G6RL-1	SPDT		8 A at 250 VAC	30,000 operations at 85°C
			5 A at 30 VDC	50,000 operations at 85°C

VDE (60947-5-1) (Reg. No. C266)

Type	Contact rating	
	Utilization category	Rated voltage
G6RL-1(-1A)	AC-15	240 VAC
	DC-13	125 VDC

Electrical Endurance Data

G6RL-1(A)	8 A at 250 VAC (cosϕ = 1) N.O.	50,000 operations min.
	8 A at 250 VAC (cosϕ = 1) N.C.	50,000 operations min.
	5 A at 24 VDC C.O.	50,000 operations min.
	5 A at 24 VDC N.O.	50,000 operations min.

Note: The results shown reflect values measured using very severe test conditions, i.e., Duty: 3 s ON/OFF for AC loads and 1 s ON/OFF for DC loads.
Electrical endurance depends on the test conditions. Consult your OMRON representative for more detailed information on the electrical endurance under your test conditions.

Engineering Data

Maximum Switching Capacity

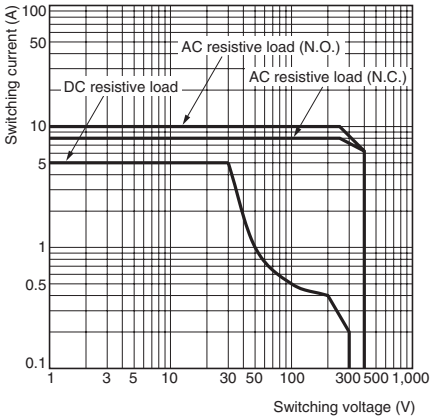

Endurance

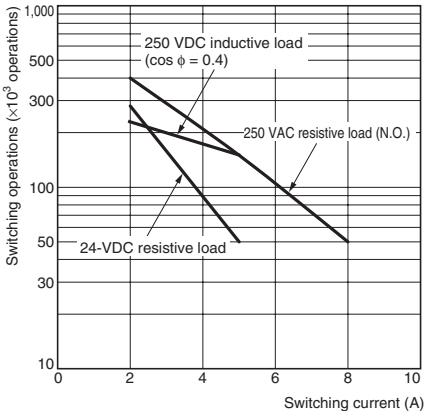

Ambient Temperature vs. Maximum Coil Voltage

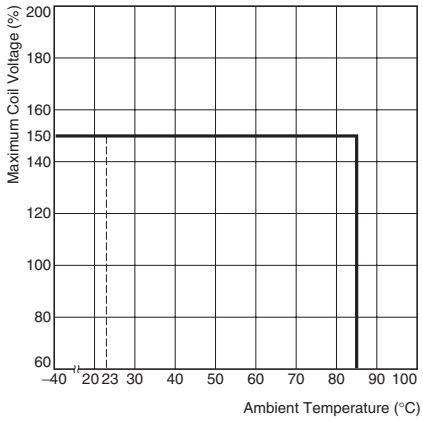

Ambient Temperature vs. Must Operate or Must Release Voltage

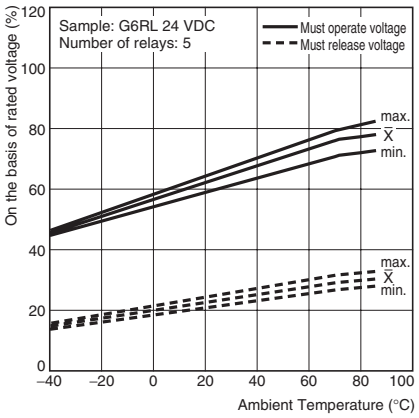

Note: "Maximum voltage" is the maximum voltage that can be applied to the Relay coil.

Dimensions

Note: All units are in millimeters unless otherwise indicated.

G6RL-1A

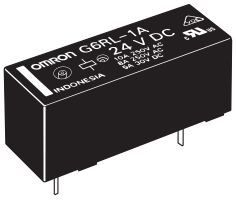

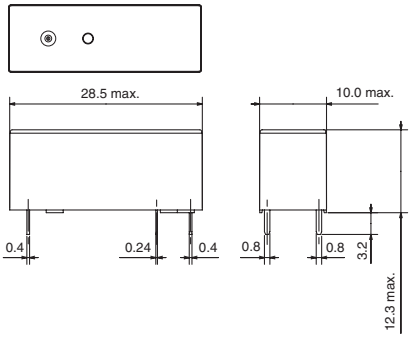

Terminal Arrangement/ Internal Connections (Bottom View)



Mounting Holes (Bottom View)

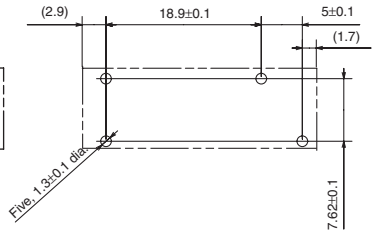

Note: Indicates average dimensions.

G6RL-1

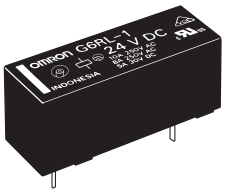

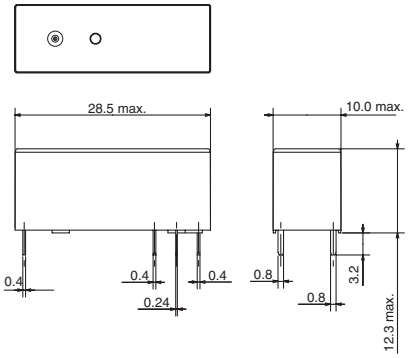

Terminal Arrangement/ Internal Connections (Bottom View)



Mounting Holes (Bottom View)

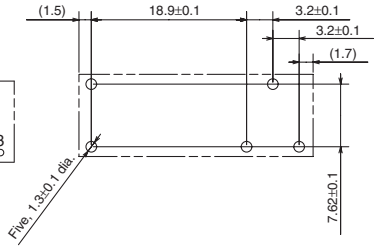

Note: Indicates average dimensions.

Precautions

Disclaimer:

All technical performance data applies to the product as such; specific conditions of individual applications are not considered. Always check the suitability of the product for your intended purpose. OMRON does not assume any responsibility or liability for noncompliance herein, and we recommend prior technical clarification for applications where requirements, loading, or ambient conditions differ from those applying to general electric applications. Any responsibility for the application of the product remains with the customer alone. THIS COMPONENT CAN NOT BE USED FOR AUTOMOTIVE APPLICATIONS.

ALL DIMENSIONS SHOWN ARE IN MILLIMETERS.
To convert millimeters into inches, multiply by 0.03937. To convert grams into ounces, multiply by 0.03527.

Cat. No. K133-E1-01 **In the interest of product improvement, specifications are subject to change without notice.**

OMRON RELAY & DEVICES Corporation

Power Relay Division
Marketing Department
1110, Sugi, Yamaga-city, Kumamoto-Pref., 861-0596 Japan
Tel: (81)968-44-4160/Fax: (81)968-44-4107

0907