IX series

Pushbutton switches for harsh environments • bushing Ø 12 mm • momentary NO & NC/NO



DISTINCTIVE FEATURES

Backlighted marking in a compact case

Strong tactile feedback

NO or NC/NO

High sealing level, no space between actuator and bushing (IP67/IP69K)



ENVIRONMENTAL SPECIFICATIONS

- Operating and storage temperature : -40 °C to +85 °C (-40 °F to +185 °F)
- Front panel sealing : IP67 according to IEC 60529, IP69K according to DIN 40050-9
- Shock resistance: 100 g according to IEC 512-4, test 6c
- Salt spray: IEC 512-6, test 11f

ELECTRICAL SPECIFICATIONS

- Max. current/voltage rating with resistive load:
  - Gold plated contact (**0**):
  100 mA 28 VDC, 1,000,000 cycles
  - Silver contact (**1**):
  2 A 28 VDC, 100,000 cycles

For W terminals, current has to be limited to 400 mA.

- Initial contact resistance : 100 mΩ max.
- Insulation resistance : 1 GΩ min. at 500 VDC
- Dielectric strength : 1,500 Vrms
- Contact bounce : 10 ms

LED COMPONENT SPECIFICATIONS

LED color	Forward current	Typ. forward voltage	Max. forward voltage
Red (R)	20 mA	1.9 V	2.5 V
Yellow (Y)	20 mA	2.3 V	2.8 V
Green (G)	20 mA	4 V	4.5 V
Blue (B)	20 mA	3.2 V	3.7 V
White (W)	20 mA	3.3 V	4 V
Red/green (F)	20 mA	Red: 2 V / green: 3.2 V	Red: 2.8 V / green: 3.7 V

A resistor must be series-connected by the user.

$$\text{Resistor value} = \frac{\text{supply voltage - LED forward voltage}}{\text{LED forward current}}$$

The company reserves the right to change specifications without notice.

IX series

Pushbutton switches for harsh environments • bushing Ø 12 mm • momentary NO & NC/NO

GENERAL SPECIFICATIONS

- Panel thickness : 2 to 8 mm
- Total travel : 2 mm (.078) ± 0.3 mm
- Typical operating force : 7 N ± 2 N
- Low level/mech. life : 1,000,000 cycles
- Torque : 0.55 Nm (0.6 Nm max.) applied to nut
- Soldering : 320 °C (608 °F) max. for 3 sec.

MATERIALS

- Case : thermoplastic UL94-V0
- Actuator : silicone
- Bushing : ABS UL94 HB
- Contacts :
  0 : brass, gold plated
  1 : silver
- Output wires : AWG24, section 0.23 mm² - 500 mm
- Terminal seal : epoxy

APEM products may be recycled at end-of-life for the re-claiming of valuable metal components.

CONNECTIONS

WIRES TERMINALS

- Contact NO : black color / Contact NC : blue color
- LED : **+** : red color
  - : white color

TERMINALS

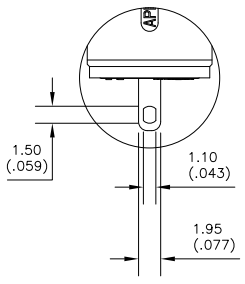

Solder lug **S**

ELECTRICAL FUNCTION

ILLUMINATED MODELS

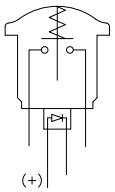

Function 3 (NO)

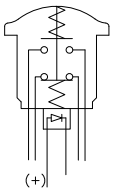

Function 5 (NC/NO)

NON-ILLUMINATED MODELS

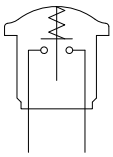

Function 3 (NO)

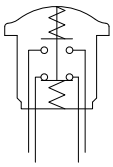

Function 5 (NC/NO)

MOUNTING

RECOMMENDED PANEL CUT-OUT (IP69K)

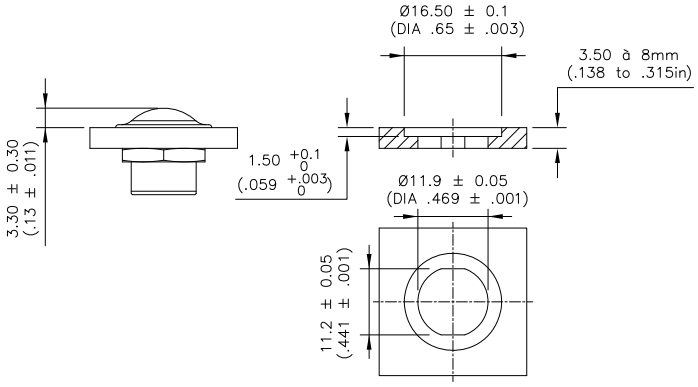

IX series

Pushbutton switches for harsh environments • bushing Ø 12 mm • momentary NO & NC/NO

MOUNTING (CONTINUED)

OTHER PANEL CUT-OUT

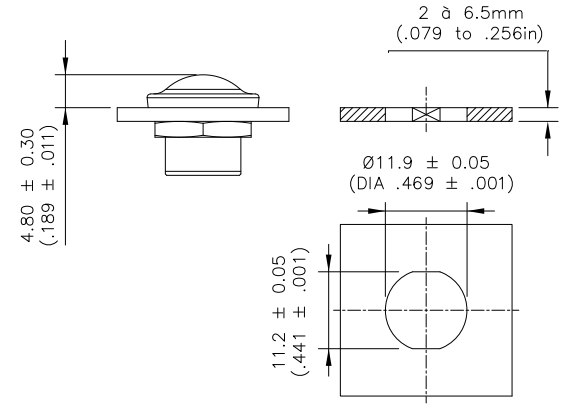

MATRIX MOUNTING

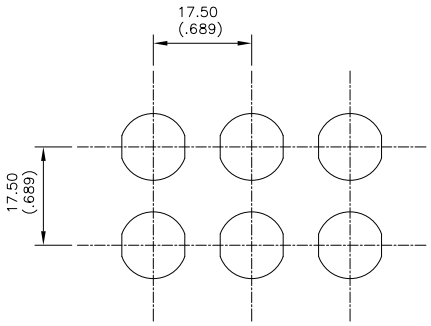

IX series

Pushbutton switches for harsh environments • bushing Ø 12 mm • momentary NO & NC/NO

BUILD YOUR PART NUMBER

BASIC PART NUMBER

IX

SERIES

ACTUATOR SHAPES

P	Round, elastomeric membrane

ELECTRICAL FUNCTION

3	Normally open (NO)
5	NC/NO combined

TERMINALS

S	Solder lugs
W	24 AWG wires

CONTACTS

0	Gold plated
1	Silver

OPTIONS

ACTUATOR COLORS

1	Blue
B	Dark blue
2	Black
3	Green
4	Grey
5	Yellow
6	Red
7	White
9	Orange

LED COLORS

M	Non-illuminated
R	Red
Y	Yellow
G	Green
B	Blue
W	White
F	Red/green

MARKING STYLE

Blank	No marking
R	Laser etched Black actuator and white marking only

MARKING

Blank	No marking
XN9	⏻
XCD	●
XKH	Illuminated ring

Other marking on request

ABOUT THIS SERIES

On the following pages, you will find successively basic part numbers of switches and options in the same order as in above chart.

Notice : please note that not all combinations of above numbers are available. Refer to the following pages for further information.

Mounting accessories : Standard hardware supplied : 1 hex nut 14 mm (.551) across flats.

IX series

Pushbutton switches for harsh environments • bushing Ø 12 mm • momentary NO & NC/NO

SOLDER LUG TERMINALS NON-ILLUMINATED - NO



IXP3S••M

→ Flat

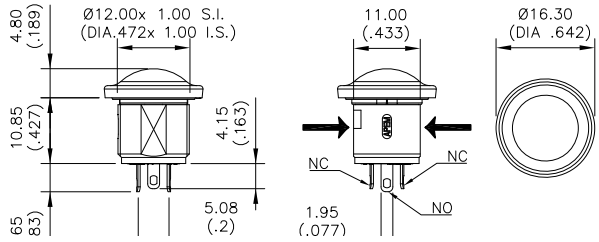

SOLDER LUG TERMINALS NON-ILLUMINATED - NC/NO



IXP5S••M

→ Flat

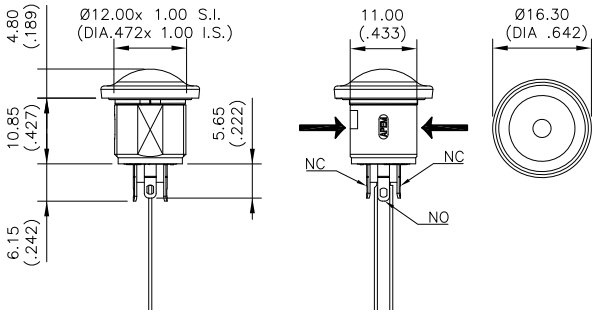

SOLDER LUG TERMINALS ILLUMINATED - NC/NO



IXP5S

→ Flat

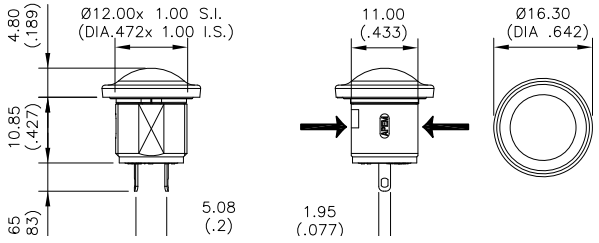

FLYING LEAD TERMINALS ILLUMINATED - NC/NO



IXP5W

→ Flat

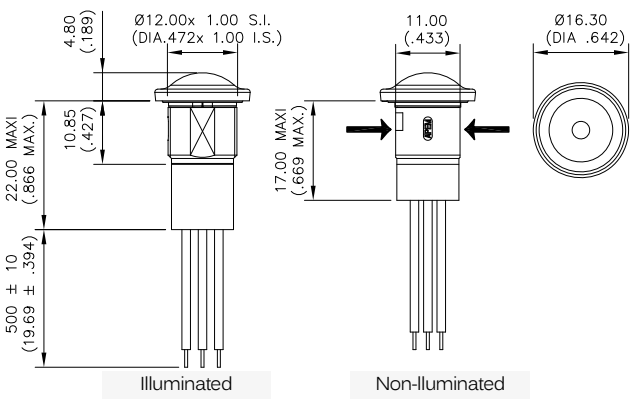

IX series

Pushbutton switches for harsh environments •
bushing Ø 12 mm • momentary NO & NC/NO

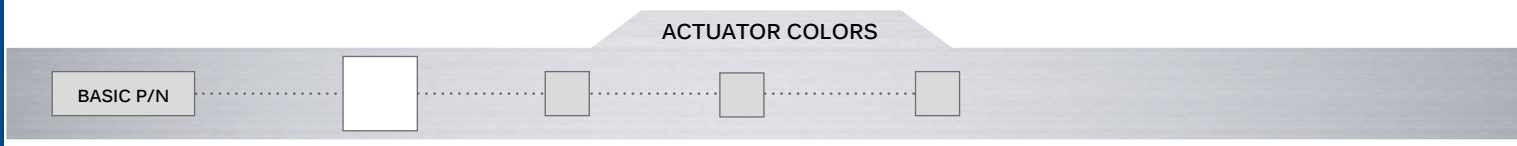

1	Blue	**5**	Yellow
B	Dark blue	**6**	Red
2	Black	**7**	White
3	Green	**9**	Orange
4	Grey		

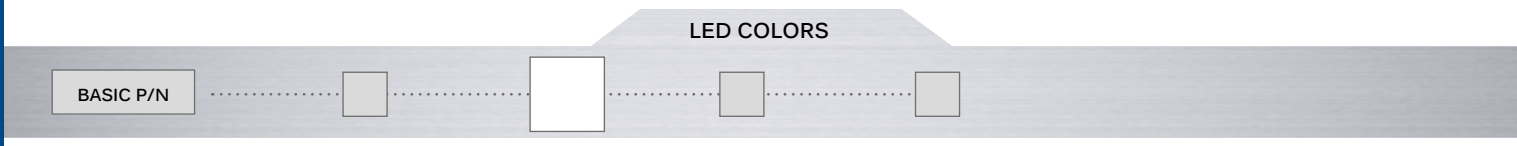

M	Non-illuminated
R	Red
Y	Yellow
G	Green
B	Blue
W	White
F	Red/green

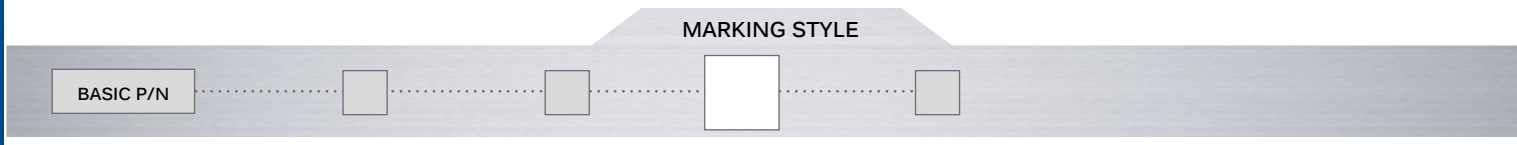

Blank	No marking
R	Laser etched - Black actuator and white marking only

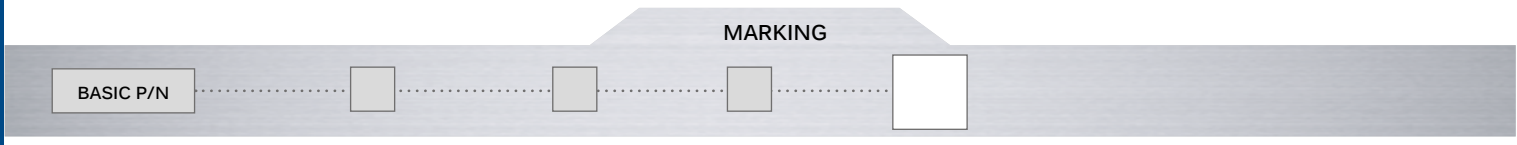

Blank	No Marking
XN9	⏻ - Symbol "power"
XCD	● - Symbol "dot"
XKH	○ - Illuminated ring

Other marking on request