plastic cable glands IP 55
ISO and PG


0 968 00


0 968 07


0 968 09


0 968 23


0 968 43

Cable gland and with flexible blades designed for commercial applications that require IP 55 protection and a good hold on the cables

Pack	Cat.Nos	Grey RAL 7035 cable glands		
		ISO		
		Conform to EN 50262		
			Clamping capacity	
		ISO	ø Min. (mm)	ø Max. (mm)
50	0 968 00	12	4	6.5
50	0 968 01	16	5	10
50	0 968 03	20	10	14
50	0 968 05	25	13	18
25	0 968 06	32	18	25
10	0 968 07	40	22	32
10	0 968 08	50	30	38
10	0 968 09	63	34	44
		PG		
		Conform to UTE C 68-300 and 68-311 guides recommendations		
			Clamping capacity	
		PG	ø Min. (mm)	ø Max. (mm)
50	0 968 20	7	3.5	6
50	0 968 21	9	4	8
50	0 968 22	11	5	10
50	0 968 23	13.5	7	12
50	0 968 24	16	10	14
50	0 968 25	21	13	18
25	0 968 26	29	18	25
10	0 968 27	36	22	32
10	0 968 28	42	30	38
10	0 968 29	48	34	44

		Grey RAL 7035 locking nuts
		ISO
50	0 968 40	ISO 12
50	0 968 41	ISO 16
50	0 968 43	ISO 20
50	0 968 45	ISO 25
25	0 968 46	ISO 32
10	0 968 47	ISO 40
10	0 968 48	ISO 50
10	0 968 49	ISO 63
		PG
50	0 968 30	PG 7
50	0 968 31	PG 9
50	0 968 32	PG 11
50	0 968 33	PG 13.5
50	0 968 34	PG 16
50	0 968 35	PG 21
25	0 968 36	PG 29
10	0 968 37	PG 36
10	0 968 38	PG 42
10	0 968 39	PG 48

plastic cable glands IP 55
ISO and PG

■ Cable glands

Characteristics
Halogen-free polyamide UL 94-V2
Operating temperature: - 20 °C to + 80 °C
Self-extinguishing 650 °C according to IEC 60695-2-11

Dimensions (mm)

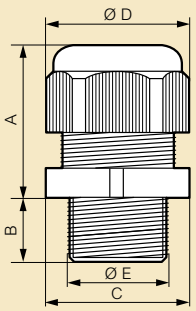

ISO

Cat.Nos	Threading	A max.	B	ø D	C to flat	ø E	Drilling ø
0 968 00	ISO 12	23	8	19	16	11.8	12.7
0 968 01	ISO 16	28	15	25	22	15.8	16.2
0 968 03	ISO 20	34	15	29	26	19.9	20.4
0 968 05	ISO 25	36	15	35	30	24.8	25.4
0 968 06	ISO 32	40	15	46	42	31.6	32.5
0 968 07	ISO 40	47	18	53	52	39.8	40.5
0 968 08	ISO 50	48	18	65	58	49.8	50.8
0 968 09	ISO 63	55	18.5	71	66	62.6	64

PG

Cat.Nos	Threading	A max.	B	ø D	C to flat	ø E	Drilling ø
0 968 20	PG 7	23	8	17	15	12.1	12.7
0 968 21	PG 9	27	8	22	19	15.1	15.2
0 968 22	PG 11	31	8	25	22	18.2	18.6
0 968 23	PG 13.5	32	9	27	24	20.2	20.4
0 968 24	PG 16	32	10	29	27	22.3	22.5
0 968 25	PG 21	35	11	39	33	28.7	28.3
0 968 26	PG 29	41	11	46	42	36.9	37
0 968 27	PG 36	50	14.5	59	53	46.4	47
0 968 28	PG 42	52	14.5	66	59	53.5	54
0 968 29	PG 48	52	14.5	70	64	59.9	60

■ Locking nuts

Glass fiber polyamide

Dimensions (mm)

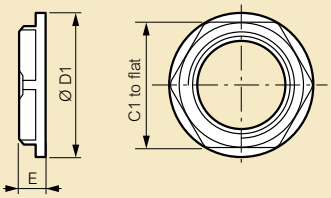

ISO

Cat.Nos	Threading	C1 to flat	E	ø D1
0 968 40	ISO 12	17	5	19
0 968 41	ISO 16	22	5	24
0 968 43	ISO 20	26	6	28
0 968 45	ISO 25	32	6	35
0 968 46	ISO 32	42	7	46
0 968 47	ISO 40	50	7	56
0 968 48	ISO 50	60	8	66
0 968 49	ISO 63	75	8	81

PG

Cat.Nos	Threading	C1 to flat	E	ø D1
0 968 30	PG 7	19	5	21
0 968 31	PG 9	22	5	24
0 968 32	PG 11	24	5	26
0 968 33	PG 13.5	26	6	28
0 968 34	PG 16	32	6	35
0 968 35	PG 21	36	7	38
0 968 36	PG 29	46	7	51
0 968 37	PG 36	60	8	66
0 968 38	PG 42	64	8	72
0 968 39	PG 48	69	8	77

plastic cable glands IP 68
ISO and PG


0 980 05


0 980 25


0 980 26


0 980 47

Anti-vibration mechanically tightened cable gland with neoprene weatherproof seal for IP 68 protection
Locking part consisting of flexible blades which exert strong pressure on the cable thus giving the product excellent tensile strength
Supplied with surface seal mounted
Polyamide

Grey RAL 7001 cable glands

ISO
Conform to EN 50 262

Pack	Cat.Nos	ISO	Clamping capacity Ø Min. (mm)	Ø Max. (mm)
25	0 980 00	12	3	6.5
25	0 980 01	16	4	8
25	0 980 03	20	6	12
10	0 980 05	25	12	18
5	0 980 06	32	18	25
3	0 980 07	40	22	32
2	0 980 08	50	30	38
2	0 980 09	63	34	44

PG
Conform to UTE C 68-300 and 68-311 guides recommendations

Pack	Cat.Nos	PG	Clamping capacity Ø Min. (mm)	Ø Max. (mm)
25	0 980 20	7	3	6.5
25	0 980 21	9	4	8
25	0 980 22	11	5	10
25	0 980 23	13.5	6	12
20	0 980 24	16	10	14
10	0 980 25	21	12	18
5	0 980 26	29	18	25
3	0 980 27	36	22	32
2	0 980 28	42	30	38
2	0 980 29	48	34	44

Grey RAL 7001 stopping plugs - ISO

Hexagonal with base ensuring the IP protection of the enclosure
Can be tightened using a flat screwdriver
Supplied with surface seal
Nuts to be ordered separately

Pack	Cat.Nos	
50	0 980 41	ISO 16
50	0 980 43	ISO 20
50	0 980 45	ISO 25
25	0 980 46	ISO 32
25	0 980 47	ISO 40

plastic cable glands IP 68

■ Cable glands

Characteristics
Halogen-free polyamide UL 94-V2
Operating temperature: - 20 °C to + 80 °C
Self-extinguishing 960 °C according to IEC 60695-2-11

Dimensions (mm)

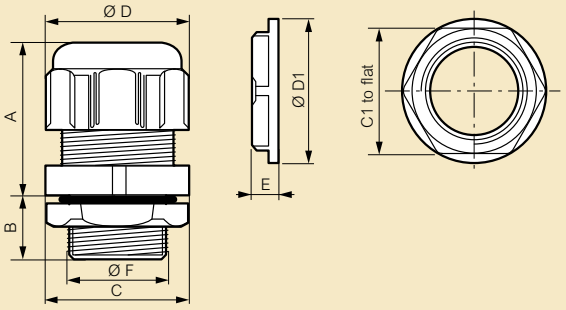

ISO

Cat.Nos	Threading	A	B	Ø D	C (to flat)	Ø F	Drilling Ø	C1	E	Ø D1
0 980 00	ISO 12	22	10	16.8	15	11.9	12.7	19	5	21
0 980 01	ISO 16	26	10	21	19	15.9	16.2	22	5	24
0 980 03	ISO 20	29	12	26.5	24	19.8	20.4	26	6	28
0 980 05	ISO 25	35	15	36	33	24.8	25.4	32	6	35
0 980 06	ISO 32	40	15	46.5	42	31.6	32.5	42	7	43
0 980 07	ISO 40	49	17	58.5	53	39.9	40.5	50	7	56
0 980 08	ISO 50	54	17	66.5	60	50	50.8	60	8	66
0 980 09	ISO 63	54	18	75	68	62.9	64	75	8	82

PG

Cat.Nos	Threading	A	B	Ø D	C (to flat)	Ø F	Drilling Ø	C1	E	Ø D1
0 980 20	PG 7	22	10	16.8	15	12.5	12.7	19	5	21
0 980 21	PG 9	26	10	21	19	15.2	15.2	22	5	24
0 980 22	PG 11	27	12	24.5	22	18.6	18.6	24	5	26
0 980 23	PG 13.5	29	12	26.5	24	20.4	20.4	26	6	28
0 980 24	PG 16	30	13	29.5	27	22.5	22.5	32	6	35
0 980 25	PG 21	35	15	36	33	28.3	28.3	36	7	38
0 980 26	PG 29	40	15	46.5	42	37	37	46	7	51
0 980 27	PG 36	49	17	58.5	53	47	47	60	8	66
0 980 28	PG 42	54	17	66.5	60	54	54	70	8	78
0 980 29	PG 48	54	18	75	68	60	60	75	8	82

■ Stopping plugs

Polyamide

Dimensions (mm)

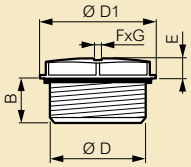

Cat.Nos	Threading	Ø D	D1	F X G	B	E
0 980 41	ISO 16	15.8	20.5	8 x 2	12	3.9
0 980 43	ISO 20	19.8	25	8 x 2	12	3.8
0 980 45	ISO 25	24.8	30.5	8 x 2	12	4.4
0 980 46	ISO 32	31.8	38	8 x 2	12	4.9
0 980 47	ISO 40	39.8	46.5	8 x 2	12.5	4.9

metal cable glands IP 68
ISO and PG



0 955 05



0 955 09



0 955 16

Metal cable glands

Mechanically tightened cable glands with neoprene weatherproof seal for IP 68 protection. Locking part consisting of flexible blades which exert strong pressure on the cable thus giving the product excellent tensile strength
Supplied with surface seal mounted

ISO

Conform to EN 50262

Pack	Cat.Nos	ISO	Clamping capacity Ø Min. (mm)	Ø Max. (mm)
20	0 955 01	16	5.5	9.5
20	0 955 03	20	7	13
10	0 955 05	25	8	16
5	0 955 06	32	11	21
5	0 955 07	40	15	27
2	0 955 08	50	22	35
2	0 955 09	63	35	48

PG

Conform to UTE C 68-300 and 68-312 guides recommendations

Pack	Cat.Nos	PG	Clamping capacity Ø Min. (mm)	Ø Max. (mm)
20	0 955 10	7	3	6.5
20	0 955 11	9	4	9
20	0 955 12	11	6	11.5
20	0 955 13	13.5	7	13
20	0 955 14	16	10	15
10	0 955 15	21	11	19
10	0 955 16	29	16	26
10	0 955 17	36	22	34.5
2	0 955 18	42	27	40
2	0 955 19	48 DIN	35	48

Metal locking nuts

ISO

50	0 979 81	ISO 16
50	0 979 83	ISO 20
50	0 979 85	ISO 25
50	0 979 86	ISO 32
25	0 979 87	ISO 40
10	0 979 88	ISO 50
10	0 979 89	ISO 63

PG

50	0 979 90	PG 7
50	0 979 91	PG 9
50	0 979 92	PG 11
50	0 979 93	PG 13.5
50	0 979 94	PG 16
50	0 979 95	PG 21
25	0 979 96	PG 29
25	0 979 97	PG 36
10	0 979 98	PG 42
10	0 979 99	PG 46

metal cable glands IP 68

Cable glands

Characteristics

Nickel-plated brass (locking part in polyamide)
Operating temperature : - 25 °C + 85 °C

Dimensions (mm)

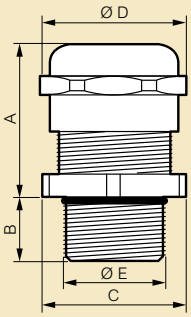

Cat.Nos	Threading	A max.	B	Ø D	C (to flat)	Ø E	Drilling Ø
0 955 01	ISO 16	25	5	19	17	15.9	16.2
0 955 03	ISO 20	27	6	24	22	19.8	20.4
0 955 05	ISO 25	27	7	30	27	24.6	25.4
0 955 06	ISO 32	31	8	36	34	31.6	32.5
0 955 07	ISO 40	34	8	46	42	39.7	40.5
0 955 08	ISO 50	37	9	60	55	49.7	50.8
0 955 09	ISO 63	45	10	70	65	62.6	64

Cat.Nos	Threading	A max.	B	Ø D	C (to flat)	Ø E	Drilling Ø
0 955 10	PG 7	21	5	15.6	14	12.4	12.7
0 955 11	PG 9	25	6	19	17	15.1	15.2
0 955 12	PG 11	25	6	22	20	18.4	18.6
0 955 13	PG 13.5	26	6.5	24	22	20.3	20.4
0 955 14	PG 16	28	6.5	26.6	24	22.4	22.5
0 955 15	PG 21	32	7	33	30	27.7	28.3
0 955 16	PG 29	36	8	44	40	36.9	37
0 955 17	PG 36	39	9	55.6	50	46.9	47
0 955 18	PG 42	42	10	63	58	54	54
0 955 19	PG 48	44	10	69.5	65	60	60

Locking nuts

Nickel-plated brass

Dimensions (mm)

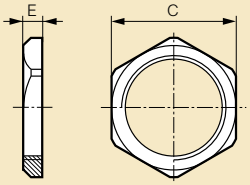

ISO

Cat.Nos	Threading	C	E
0 979 81	ISO 16	19	3
0 979 83	ISO 20	24	3.5
0 979 85	ISO 25	30	4
0 979 86	ISO 32	36	4
0 979 87	ISO 40	46	5
0 979 88	ISO 50	60	5
0 979 89	ISO 63	70	6

PG

Cat.Nos	Threading	C	E
0 979 90	PG 7	15	2.8
0 979 91	PG 9	18	2.8
0 979 92	PG 11	21	3
0 979 93	PG 13.5	23	3
0 979 94	PG 16	26	3
0 979 95	PG 21	32	3.5
0 979 96	PG 29	41	4
0 979 97	PG 36	51	5
0 979 98	PG 42	60	6
0 979 99	PG 48	65	6.5

KLINKMANN
www.klinkmann.com

Helsinki
tel. +358 9 540 4940
automation@klinkmann.fi

St. Petersburg
tel. +7 812 327 3752
klinkmann@klinkmann.spb.ru

Moscow
tel. +7 495 641 1616
moscow@klinkmann.spb.ru

Yekaterinburg
tel. +7 343 287 19 19
yekaterinburg@klinkmann.spb.ru

Samara
tel. +7 846 273 95 85
samara@klinkmann.spb.ru

Kiev
tel. +38 044 495 33 40
klinkmann@klinkmann.kiev.ua

Riga
tel. +371 6738 1617
klinkmann@klinkmann.lv

Vilnius
tel. +370 5 215 1646
post@klinkmann.lt

Tallinn
tel. +372 668 4500
klinkmann.est@klinkmann.ee

Minsk
tel. +375 17 200 0876
minsk@klinkmann.com