

Page 1-4

SM1P...
- Motor protection
- Push button control
- Ranges 0.1...40A (16 choices)
- IEC breaking capacity Icu at 400V: from 100 to 10kA
- Suitable for mounting in modular panels.



Page 1-4

SM1R...
- Motor protection
- Rotary knob type
- Ranges 0.1...40A (16 choices)
- IEC breaking capacity Icu at 400V: from 100 to 20kA
- Thermal and magnetic trip indicator
- UL 508 Type E via accessory (certification obtained for range from 0.1 to 6.5A; pending for all the other ratings).



Page 1-4

SM1RM...
- Starter protection (magnetic only)
- Rotary knob type
- Rated current from 0.16 to 40A
- IEC breaking capacity Icu at 400V: from 100 to 20kA.



Page 1-5

SM2R...
- Motor protection
- Rotary knob type
- Ranges 34...63A (2 choices)
- IEC breaking capacity Icu at 400V: 50kA
- UL 508 Type E.



Page 1-5

SM3R...
- Motor protection
- Rotary knob type
- Ranges 55...100A (3 choices)
- IEC breaking capacity Icu at 400V: 50kA
- Thermal and magnetic trip indicator
- UL 508 Type E via accessory.



Page 1-5

SM1PF...
- Fuse monitoring function
- Push button control
- Fixed thermal protection: 0.2A
- Magnetic trip threshold: 1.2A.

IE3 READY

LOVATO Electric motor protection circuit breakers are suitable for new motors with high IE3 efficiency values

Motor protection circuit breakers



- Wide adjustment range 0.1 to 100A
- IEC breaking capacity Icu 50kA (400V) up to 100A
- Suitable for isolation
- Comprehensive line of accessories
- Magnetic-only version
- Automatic trip indicators
- High reliability and accuracy of tripping.

Sec. - Page

Motor protection circuit breakers

Motor protection circuit breakers SM1… up to 40A. Magnetic and thermal protection ..... 1 - 4
Motor protection circuit breakers SM1RM… up to 40A. Magnetic protection ..... 1 - 4
Motor protection circuit breakers SM2... and SM3... up to 100A. Magnetic and thermal protection ..... 1 - 5
SM1PF... breakers. Fuse monitoring function ..... 1 - 5
Add-on blocks and accessories for SM1… ..... 1 - 6
Add-on blocks and accessories for SM2... and SM3... ..... 1 - 8

Dimensions ..... 1 - 12
Wiring diagrams ..... 1 - 14
Technical characteristics ..... 1 - 15

Orange

Lovato electric

1

IEC ratings

Motor protection (magnetic and thermal protection)



SM1P...



SM1R... SM2R... SM3R...

Starter protection (magnetic protection)



SM1RM...

	SM1P...	SM1R...	SM2R...	SM3R...	SM1RM...
Rated current	0.1...40A	0.1...40A	34...63A	55…100A	0.1…40A
Thermal protection	●	●	●	●	
Magnetic protection	●	●	●	●	●
TRIP position		●		●	●
Phase failure sensitive	●	●	●	●	
Padlockable in O	●	●	●	●	●

Choice	230V		400V		440V		500V		690V		230V		400V		440V		500V		690V		230V		400V		440V		500V		690V	
	Icu	Ics	Icu	Ics	Icu	Ics	Icu	Ics	Icu	Ics	Icu	Ics	Icu	Ics	Icu	Ics	Icu	Ics	Icu	Ics	Icu	Ics	Icu	Ics	Icu	Ics	Icu	Ics	Icu	Ics
[A]	kA	kA	kA	kA	kA	kA	kA	kA	kA	kA	kA	kA	kA	kA	kA	kA	kA	kA	kA	kA	kA	kA	kA	kA	kA	kA	kA	kA	kA	kA
0.1...0.16	100	100	100	100	100	100	100	100	100	100	100	100	100	100	100	100	100	100	100	100	100	100	100	100	100	100	100	100	100	100
0.16...0.25	100	100	100	100	100	100	100	100	100	100	100	100	100	100	100	100	100	100	100	100	100	100	100	100	100	100	100	100	100	100
0.25...0.4	100	100	100	100	100	100	100	100	100	100	100	100	100	100	100	100	100	100	100	100	100	100	100	100	100	100	100	100	100	100
0.4...0.63	100	100	100	100	100	100	100	100	100	100	100	100	100	100	100	100	100	100	100	100	100	100	100	100	100	100	100	100	100	100
0.63...1	100	100	100	100	100	100	100	100	100	100	100	100	100	100	100	100	100	100	100	100	100	100	100	100	100	100	100	100	100	100
1...1.6	100	100	100	100	100	100	100	100	100	100	100	100	100	100	100	100	100	100	100	100	100	100	100	100	100	100	100	100	100	100
1.6...2.5	100	100	100	100	100	100	100	100	3	3	100	100	100	100	100	100	100	100	10	10	100	100	100	100	100	100	100	100	10	10
2.5...4	100	100	100	100	100	100	100	100	3	3	100	100	100	100	100	100	100	100	10	10	100	100	100	100	100	100	100	100	10	10
4...6.5	100	100	100	100	100	100	100	100	3	3	100	100	100	100	100	100	100	100	4	2	100	100	100	100	100	100	100	100	4	2
6.3...10	100	100	100	100	25	12.5	25	12.5	3	3	100	100	100	100	42	42	42	42	4	2	100	100	100	100	42	42	42	42	4	2
9...14	100	100	25	12.5	10	5	10	5	3	3	100	100	100	100	42	42	42	42	4	2	100	100	100	100	42	42	42	42	4	2
13...18	100	50	25	12.5	10	5	10	5	3	3	100	100	100	100	10	5	10	5	4	2	100	100	100	100	10	5	10	5	4	2
17...23	50	50	15	5	10	5	10	5	3	2	100	100	50	25	10	5	10	5	4	2	100	100	50	25	10	5	10	5	4	2
20...25	50	50	15	5	10	5	10	5	3	2	100	100	50	25	10	5	10	5	4	2	100	100	50	25	10	5	10	5	4	2
24...32	50	50	10	5	10	5	10	5	3	2	100	100	50	25	10	5	10	5	4	2	100	100	50	25	10	5	10	5	4	2
30...40	20	20	10	5	10	5	10	5	3	2	100	100	20	10	10	5	10	5	4	2	100	100	20	25	10	5	10	5	4	2
34…50	-	-	-	-	-	-	-	-	-	-	100	100	50	50	35	27	10	8	5	5	-	-	-	-	-	-	-	-	-	-
45…63	-	-	-	-	-	-	-	-	-	-	100	100	50	50	35	27	10	8	5	5	-	-	-	-	-	-	-	-	-	-
55…75	-	-	-	-	-	-	-	-	-	-	100	100	50	38	40	30	8	6	5	4	-	-	-	-	-	-	-	-	-	-
70…90	-	-	-	-	-	-	-	-	-	-	100	100	50	38	40	30	8	6	5	4	-	-	-	-	-	-	-	-	-	-
80…100	-	-	-	-	-	-	-	-	-	-	100	100	50	38	40	30	8	6	5	4	-	-	-	-	-	-	-	-	-	-

SM1P... MODULAR SIZE
- Mounting on front of panels or in modular panels for rapid access to buttons, avoiding the opening of the door by non-technical staff.
- Auxiliary contacts, indicator contacts and releases compatible with modular panels.

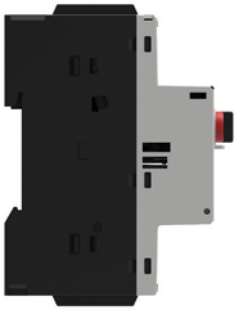

40A IN 45mm
- From 0.1A to 40A in a device just 45mm wide.
- High short-circuit breaking capacity up to 40A.
- Small, cost-effective starters.



SM1R... TRIP INDICATION
- Thermal and magnetic trip indication with trip position of knob.
- Specific optical indication for short-circuit tripping; guarantees maximum safety for operators and reliability of the system.
- Auxiliary trip indication contacts with ability to distinguish overload from short circuit.



UL 508 Type E
- The entire rotary knob type is certified UL Type E (pending for ranges from 6.5 to 40A).
- Type E is a specific requirement of the UL standards that requires, of short-circuit protection devices, increased terminal isolation distances and strict breaking capacity tests.
- Eliminates the need for further short-circuit protection devices upstream of the motor protection.

SM1... HIGH-PERFORMANCE PLASTICS
- IEC/EN 60335-compliant plastics for domestic and similar applications. Can be used in catering equipment.
- EN 45545-compliant plastics: fire behaviour and emissions of fumes. Suitable for railway applications.

Fuse monitoring



SM1PF...

UL508 ratings

Motor protection (magnetic and thermal protection)



SM1P...



SM1R... - SM2R... - SM3R...

0.2A											UL508 Manual Motor Controller - Short circuit current in kA											UL508 Manual Self Protected Combination Motor Controller (Type E) Short circuit current in kA		
●											Motor Disconnect Group Motor Installation			Protection	Motor Disconnect		Group Motor Installation		Protection	Tap Conductor Protection				
●																								
●																								
●																								
230V		400V		440V		500V		690V			240V	480V	600V		480V	600V	480V	600V		480Y/277V	600Y/347V	240V	480Y/277V	600Y/347V
Icu	Ics	Icu	Ics	Icu	Ics	Icu	Ics	Icu	Ics															
kA	kA	kA	kA	kA	kA	kA	kA	kA	kA		kA	kA	kA		kA	kA	kA	kA		kA	kA	kA	kA	kA
-	-	-	-	-	-	-	-	-	-		50	50	50	Fuse or CB	50	50	50	50	Fuse or CB	50	50	50	50	50
100	100	100	100	100	100	100	100	100	100		50	50	50	Fuse or CB	50	50	50	50	Fuse or CB	50	50	50	50	50
-	-	-	-	-	-	-	-	-	-		50	50	50	Fuse or CB	50	50	50	50	Fuse or CB	50	50	50	50	50
-	-	-	-	-	-	-	-	-	-		50	50	50	Fuse or CB	50	50	50	50	Fuse or CB	50	50	50	50	50
-	-	-	-	-	-	-	-	-	-		50	50	50	Fuse or CB	50	50	50	50	Fuse or CB	50	50	50	50	50
-	-	-	-	-	-	-	-	-	-		50	50	50	Fuse or CB	50	50	50	50	Fuse or CB	50	50	50	50	50
-	-	-	-	-	-	-	-	-	-		30	30	30	100A Class J	30	30	30	30	Fuse or CB	30	30	30	30	30
-	-	-	-	-	-	-	-	-	-		30	30	30	100A Class J	30	30	30	30	Fuse or CB	30	30	30	30	30
-	-	-	-	-	-	-	-	-	-		30	30	30	100A Class J	30	30	30	30	Fuse or CB	30	30	30	30	30
-	-	-	-	-	-	-	-	-	-		30	30	30	100A Class J	30	30	30	30	100A Class J	❶	❶	❶	❶	❶
-	-	-	-	-	-	-	-	-	-		30	30	-	100A Class J	30	30	30	30	200A Class J	❶	❶	❶	❶	❶
-	-	-	-	-	-	-	-	-	-		30	30	-	100A Class J	30	30	30	30	200A Class J	❶	❶	❶	❶	❶
-	-	-	-	-	-	-	-	-	-		5	5	-	Fuse or CB	30	30	30	30	200A Class J	❶	❶	❶	❶	❶
-	-	-	-	-	-	-	-	-	-		5	5	-	Fuse or CB	30	30	30	30	200A Class J	❶	❶	❶	❶	❶
-	-	-	-	-	-	-	-	-	-		5	5	-	Fuse or CB	30	30	30	30	200A Class J	❶	❶	❶	❶	❶
-	-	-	-	-	-	-	-	-	-		5	5	-	Fuse or CB	30	30	30	30	200A Class J	❶	❶	❶	❶	❶
-	-	-	-	-	-	-	-	-	-		-	-	-	-	50	10	50	10	Fuse or CB	50	10	100	50	-
-	-	-	-	-	-	-	-	-	-		-	-	-	-	50	10	50	10	Fuse or CB	50	10	100	50	-
-	-	-	-	-	-	-	-	-	-		-	-	-	-	40	10	40	10	Fuse or CB	40	10	100	40	-
-	-	-	-	-	-	-	-	-	-		-	-	-	-	40	10	40	10	Fuse or CB	40	10	100	40	-
-	-	-	-	-	-	-	-	-	-		-	-	-	-	40	10	40	10	Fuse or CB	40	10	100	40	-

❶ Pending.

ENCLOSURES

- Various types of plastic enclosures are available for rotating and button-controlled motor protection circuit breakers up to 40A.
- Ideal for small machines and isolated motors.
- IP65 (UL Type 4X) protection rating and UV-ray resistant.
- Very robust plastics, IK07; pass even the strict UL "ball impact" test.
- UL-certified.



DOOR COUPLING HANDLES

- Padlockable door coupling handles for the entire rotary knob type. Make systems compliant with safety regulations.
- Tough, easy and quick to install.



SM1... PADLOCKABILITY

- Padlockability as standard on the entire rotary knob type and push button-controlled motor protection circuit breaker range. For greater operator safety during maintenance and bypassing of the equipment.



1 Motor protection circuit breakers SM1… up to 40A. Magnetic and thermal protection



SM1P…



SM1R…

Order code	Thermal trip adjustment range	Short circuit breaking capacity at 400V Icu	Ics	Qty per pkg	Wt
	[A]	[kA]	[kA]	n°	[kg]
Push button control.					
SM1P 0016	0.1...0.16	100	100	1	0.280
SM1P 0025	0.16...0.25	100	100	1	0.280
SM1P 0040	0.25...0.4	100	100	1	0.280
SM1P 0063	0.4...0.63	100	100	1	0.280
SM1P 0100	0.63...1	100	100	5	0.280
SM1P 0160	1...1.6	100	100	5	0.280
SM1P 0250	1.6...2.5	100	100	5	0.350
SM1P 0400	2.5...4	100	100	5	0.350
SM1P 0650	4...6.5	100	100	5	0.350
SM1P 1000	6.3...10	100	100	5	0.350
SM1P 1400	9...14	25	12.5	5	0.350
SM1P 1800	13...18	25	12.5	5	0.350
SM1P 2300	17...23	15	5	1	0.350
SM1P 2500	20...25	15	5	1	0.350
SM1P 3200	24...32	10	5	1	0.350
SM1P 4000	30...40	10	5	1	0.350
Rotary knob type.					
SM1R 0016	0.1...0.16	100	100	1	0.320
SM1R 0025	0.16...0.25	100	100	1	0.320
SM1R 0040	0.25...0.4	100	100	1	0.320
SM1R 0063	0.4...0.63	100	100	1	0.320
SM1R 0100	0.63...1	100	100	5	0.320
SM1R 0160	1...1.6	100	100	5	0.320
SM1R 0250	1.6...2.5	100	100	5	0.320
SM1R 0400	2.5...4	100	100	5	0.390
SM1R 0650	4...6.5	100	100	5	0.390
SM1R 1000	6.3...10	100	100	5	0.390
SM1R 1400	9...14	100	100	5	0.390
SM1R 1800	13...18	100	100	5	0.390
SM1R 2300	17...23	50	25	1	0.390
SM1R 2500	20...25	50	25	1	0.390
SM1R 3200	24...32	50	25	1	0.390
SM1R 4000	30...40	20	10	1	0.390

General characteristics
SM1P... and SM1R... are modern circuit breakers with thermal and magnetic trip releases and high breaking capacity.
Motor control and protection of up to 22kW (400V) are possible by choosing the suitable adjustment range, 0.1 to 40A.
The dimensions of SM1P… breakers are compliant with the DIN43880 standard, allowing them to be mounted in all modular enclosures on the market.
A magnetic trip indicator integrated on the SM1R… breakers avoids dangerous closing operations during short-circuit conditions, previously disconnected by the breaker.
SM1R… breakers are Type E-certified according to UL508 (certification obtained for range from 0.1 to 6.5A; pending for all the other ratings).
SM1P… and SM1R… motor protection circuit breakers are suitable for isolation in accordance with IEC/EN 60947 standards and can be padlocked in OFF position without using accessories.
Their high breaking capacity consents to exclude protection fuses on the majority of the installations.

Operational characteristics
- IEC rated insulation voltage Ui: 690V
- IEC rated impulse withstand voltage: 6kV
- IEC rated frequency: 50/60Hz
- Maximum rated current: 40A
- Adjustment ranges: 16
- IEC breaking capacity: See table on page 1-2
- Heat dissipation per phase: 0.7...3.3W
- Magnetic tripping: 13In max.
- Tripping class: 10A
- Phase failure sensitive
- Mechanical life: 100,000 cycles
- Electrical life: 100,000 cycles
- Mounting on 35mm DIN rail (IEC/EN 60715)
- Mounting position: Any
- IEC utilisation category: A
- Padlocking in OFF: Ø4mm/0.16”
- IEC degree of protection: IP20.

Certifications and compliance
Certifications obtained: cULus.
SM1R… breakers are Type E-certified (Self-Protected Combination Motor Controllers) according to UL508 (certification obtained for range from 0.1 to 6.5A; pending for all the other ratings).
Certifications pending: EAC, CCC.
Compliant with standards: IEC/EN 60947-1, IEC/EN 60947-2, IEC/EN 60947-4-1, UL508, CSA C22.2 n° 14.
Plastic materials compliant with standards: IEC/EN 60335 and EN 45545.

Motor protection circuit breakers SM1RM… up to 40A. Magnetic protection



SM1RM…

Order code	Rated and magnetic trip current Rat.	Trip.	Short circuit breaking capacity at 400V Icu	Ics	Qty per pkg	Wt
	[A]	[A]	[kA]	[kA]	n°	[kg]
Rotary knob type.						
SM1RM 0016	0.16	1.6	100	100	1	0.320
SM1RM 0025	0.25	3.2	100	100	1	0.320
SM1RM 0040	0.4	5.2	100	100	1	0.320
SM1RM 0063	0.63	8.2	100	100	1	0.320
SM1RM 0100	1	13	100	100	5	0.320
SM1RM 0160	1.6	21	100	100	5	0.320
SM1RM 0250	2.5	33	100	100	5	0.320
SM1RM 0400	4	52	100	100	5	0.390
SM1RM 0650	6.5	85	100	100	5	0.390
SM1RM 1000	10	130	100	100	5	0.390
SM1RM 1400	14	182	100	100	5	0.390
SM1RM 1800	18	234	100	100	5	0.390
SM1RM 2300	23	299	50	25	1	0.390
SM1RM 2500	25	325	50	25	1	0.390
SM1RM 3200	32	416	50	25	1	0.390
SM1RM 4000	40	420	20	25	1	0.390

General characteristics
SM1RM… are motor protection circuit breakers with magnetic tripping only and high breaking capacity.
They are typically used to protect starters where there is a thermal relay or other overload protection.
Starter control and protection of up to 22kW (400V) are possible by choosing the suitable adjustment range, from 0.1 to 40A.

Operational characteristics
- IEC rated insulation voltage Ui: 690V
- IEC rated impulse withstand voltage: 6kV
- IEC rated frequency: 50/60Hz
- Maximum rated current: 40A
- IEC breaking capacity: See table on page 1-3
- Heat dissipation per phase: 0.7...3.3W
- Magnetic tripping: 13In max.
- Mechanical life: 100,000 cycles
- Electrical life: 100,000 cycles
- Mounting on 35mm DIN rail (IEC/EN 60715)
- Mounting position: Any
- IEC utilisation category: A
- Padlocking in OFF: Ø4mm
- IEC degree of protection: IP20.

Certifications and compliance
Certifications obtained: cULus.
Certifications pending: EAC, CCC.
Compliant with standards: IEC/EN 60947-1, IEC/EN 60947-2, IEC/EN 60947-4-1, UL508, CSA C22.2 n° 14.
Plastic materials compliant with standards: IEC/EN 60335 and EN 45545.

Motor protection circuit breakers SM2… and SM3… up to 100A. Magnetic and thermal protection



SM2R…



SM3R…

Order code	Thermal trip adjustment range	Short circuit breaking capacity at 400V Icu	Ics	Qty per pkg	Wt
	[A]	[kA]	[kA]	n°	[kg]
Rotary knob type.					
SM2R 5000	34…50	50	50	1	1.000
SM2R 6300	45…63	50	50	1	1.000
Rotary knob type.					
SM3R 7500	55…75	50	38	1	2.200
SM3R 9000	70…90	50	38	1	2.200
SM3R 9900	80…100	50	38	1	2.200

General characteristics
SM2R... and SM3R... are modern circuit breakers with thermal and magnetic trip releases and high breaking capacity.
Motor control and protection, up to 45kW (400V) are possible by choosing the suitable adjustment range, up to 100A.
SM2R… and SM3R… breakers are Type E-certified according to UL508.
The SM2R… and SM3R… types are suitable for isolation according to IEC/EN 60947 standards and can be padlocked in OFF position without using accessories.
SM3… has a trip function which indicates thermal and magnetic tripping.
Their high breaking capacity consents to exclude protection fuses on the majority of the installations.

Operational characteristics
- IEC rated insulation voltage Ui: 1000V
- IEC rated impulse withstand voltage: 8kV
- IEC rated frequency: 50/60Hz
- Maximum rated current:
  63A (for SM2...); 100A (for SM3...)
- Adjustment ranges: 2 (for SM2...); 3 (for SM3...)
- IEC breaking capacity: See table on page 1-2 and 1-3
- Max. heat dissipation per phase: 7W
- Magnetic tripping: 13In max.
- Tripping class: 10A
- Phase failure sensitive
- Mechanical life: 50,000 cycles
- Electrical life: 25,000 cycles
- Mounting on 35mm DIN rail (IEC/EN 60715)
- Mounting position: Any
- IEC utilisation category: A
- Padlocking in OFF: Ø4mm/0.16”
- IEC degree of protection: IP20 on front.

Certifications and compliance
Certifications obtained: cULus.
SM2… and SM3… circuit breakers are Type E-certified (Self-Protected Combination Motor Controllers) according to UL508; for Type E certification, SM3 only with accessory SM3X90 00R.
Compliant with standards: IEC/EN 60947-1, IEC/EN 60947-2, IEC/EN 60947-4-1, UL508, CSA C22.2 n° 14.

SM1PF… circuit breakers Fuse monitoring function



SM1PF…

Order code	Fixed thermal release current	Short circuit breaking capacity at 400V Icu	Ics	Qty per pkg	Wt
	[A]	[kA]	[kA]	n°	[kg]
Push button control.					
SM1PF 0020	0.20	100	100	5	0.280

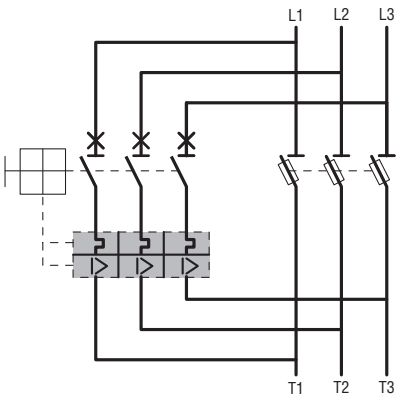

General characteristics
SM1PF… are breakers with magnetic-thermal tripping intended specifically for monitoring the status of fuses.
By connecting every phase of the breaker to a fuse, when it blows, the motor protection breaks.
Through the auxiliary contacts fitted on the motor protection, the blown fuses are signalled electrically.

Operational characteristics
- IEC rated insulation voltage Ui: 690V
- IEC rated impulse withstand voltage: 6kV
- IEC rated frequency: 50/60Hz
- Rated current: 0.2A
- Magnetic tripping: 1.2A.
- Mechanical life: 100,000 cycles
- Electrical life: 100,000 cycles
- Mounting on 35mm DIN rail (IEC/EN 60715)
- Mounting position: Any
- IEC utilisation category: A
- Padlocking in OFF: Ø4mm/0.16”
- IEC degree of protection: IP20.

Certifications and compliance
Certifications obtained: cULus.
Certifications pending: EAC, CCC.
Compliant with standards: IEC/EN 60947-1, IEC/EN 60947-2, IEC/EN 60947-4-1, UL508, CSA C22.2 n° 14.
Plastic materials compliant with standards: IEC/EN 60335 and EN 45545.

1



SM1X11…



SM1X12…



SM1X13…



SM1X14…
SM1X15…



SM1X16…



SM1X18 200R



SM1X18B 200R



SM1X18 S



SM1X89 02



BFX89 01

Order code	Characteristics	Qty per pkg	Wt
		n°	[kg]
Add-on auxiliary contacts.			
SM1X11 20	Front mount 2NO	10	0.016
SM1X11 11	Front mount 1NO+1NC	10	0.016
SM1X12 20	Side mount 2NO	1	0.036
SM1X12 11	Side mount 1NO+1NC	10	0.016
SM1X12 02	Side mount 2NC	1	0.036
SM1X13 11	Side mount. Contacts for thermal and magnetic tripping indication 1NO+1NC	1	0.036
SM1X13 11M	Side mount. Contacts for magnetic tripping indication 1NO+1NC	1	0.036
Undervoltage trip releases.			
SM1X14 110	110VAC 50/60Hz	1	0.130
SM1X14 230	230VAC 50/60Hz	1	0.130
SM1X14 400	400VAC 50/60Hz	1	0.130
SM1X15 110R❶	With early-make contacts 110VAC 50/60Hz	1	0.140
SM1X15 230R❶	With early-make contacts 230VAC 50/60Hz	1	0.140
SM1X15 400R❶	With early-make contacts 400VAC 50/60Hz	1	0.140
Shunt trip releases.			
SM1X16 024	24VAC 50/60Hz	1	0.130
SM1X16 110	110VAC 50/60Hz	1	0.130
SM1X16 230	230VAC 50/60Hz	1	0.130
SM1X16 400	400VAC 50/60Hz	1	0.130
Adjuster sealing kit.			
SM1X18 12	With wire and lead included	1	0.006
IP65 (4X) padlockable door coupling handle for SM1R...			
SM1X18 200R	Red/yellow complete with rod length 200mm/7.87”	1	0.115
SM1X18B 200R	Black complete with rod length 200mm/7.87”	1	0.115
SM1X18 S❷	Support for rod >145mm/5.71”	1	0.030
Phase separation barriers for SM1R…			
SM1X9000R	For Type E as per UL508	5	0.016
Three-phase connection busbars 45mm/1.77” spacing.			
11 SMX90 32	For 2 breakers	10	0.028
11 SMX90 33	For 3 breakers	10	0.050
11 SMX90 34	For 4 breakers	10	0.071
11 SMX90 35	For 5 breakers	10	0.092
Three-phase connection busbars 54mm/2.13” spacing.			
11 SMX90 42	For 2 breakers	10	0.031
11 SMX90 43	For 3 breakers	10	0.056
11 SMX90 44	For 4 breakers	10	0.081
11 SMX90 45	For 5 breakers	10	0.090
Terminal block for busbar supply.			
11 SMX90 30	For all busbar types	10	0.048
SM1X90 50	For all busbar types Type E as per UL508	10	0.033
Safety cover.			
11 SMX90 31	For unused terminals	10	0.004
Accessories for screw-fixing motor protection.			
SM1X89 02	Metal bracket for fixing SM1… motor protection with screws	10	0.006
BFX89 01	Universal plastic base for screw-fixing SM1… motor protection	5	0.016

❶ Only suitable for SM1R... motor protection circuit breakers
❷ Mounting also possible with side-mount auxiliary contacts SM1X12... and SM1X13...

General and operational characteristics
ADD-ON AUXILIARY CONTACTS
- Connectable to the left side of the breaker or on the front
- Maximum combinations: 3 SM1X… blocks with 6 auxiliary contacts in total of which 1 front block and 2 side blocks
- IEC conventional free air thermal current Ith: 10A (5A for SM1X11...)
- IEC rated insulation voltage Ui: 690V (300V for SM1X11...)
- Rated impulse withstand voltage Uimp 6kV (4kV for SM1X11...)
- UL/CSA and IEC/EN 60947-5-1 designation: A600 - Q600 (C300 - R300 for SM1X11...)
- Maximum tightening torque: 1Nm / 9lbin
- Conductor cross section minimum-maximum (1 or 2 wires): 0.75...2.5mm 2 or 18...14AWG.
- Screw tightening tool: Phillips 2
- Maximum tightening torque: 1Nm / 9lbin
- Width of side-mount auxiliary contacts equal to 0.5 DIN 46880 modules.

UNDERVOLTAGE TRIP RELEASES
- Snap on to the right side of the breaker
- Consumption inrush/holding: 12/3.5VA
- Release voltage: 0.35...0.7Us
- Operating voltage: 0.85...1.1Us
- Maximum tightening torque: 1Nm / 9lbin
- Conductor cross section minimum-maximum (1 or 2 wires): 0.75...2.5mm 2 or 18...14AWG.
- Screw tightening tool: Phillips 2
- Maximum tightening torque: 1Nm / 9lbin
- Width of side-mount auxiliary contacts equal to 1 DIN 46880 module.

SHUNT TRIP RELEASES
- Snap on to the right side of the breaker
- In-rush consumption: 20VA
- Operating voltage: 0.7...1.1Us
- Conductor cross section minimum-maximum (1 or 2 wires): 0.75...2.5mm 2 or 18...14AWG.
- Screw tightening tool: Phillips 2
- Maximum tightening torque: 1Nm / 9lbin
- Width of side-mount auxiliary contacts equal to 1 standard DIN 46880 module.

TERMINAL BLOCKS FOR BUSBAR SUPPLY
- Imax 63A
- Screw tightening tool: Phillips 2
- Maximum tightening torque: 2.3Nm / 20lbin
- Conductor cross section minimum-maximum: 4...25mm 2 or 10...4AWG.

THREE-PHASE CONNECTION BUSBARS
- Imax 63A
- SMX90 3... 45mm/1.77” spacing to reduce the width to the minimum
- SMX90 4... 54mm/2.13” spacing to consent to fit one side-mount auxiliary contact block on the breaker.

Certifications and compliance
Certifications obtained: cULus.
Certifications pending: EAC, CCC.
Compliant with standards: IEC/EN 60947-1, IEC/EN 60947-5-1, UL508, CSA C22.2 n° 14.


SM1X30…

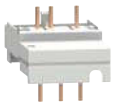
SM1X31…
SM1X32…


SM1Z17 01P


SM1Z17 02P


SM1Z17 05P


SM1Z17 15R


SM1X17 40P


SM1X17 45P


SM1X17 46P


11 SMX90 10


11 SMX90 12


11 SMX90 14

Order code	Characteristics	Qty per pkg	Wt
		n°	[kg]
Rigid SM1 breaker-contactor connections.			
SM1X30 40P	For motor protection breaker SM1P... with BG… mini-contactors	10	0.019
SM1X31 41P	For motor protection breaker SM1P... with BF09..25A contactors	10	0.035
SM1X32 41P	For motor protection breaker SM1P... with BF26..38A contactors	10	0.045
SM1X30 40R	For motor protection breaker SM1R... with BG… mini-contactors	10	0.019
SM1X31 41R	For motor protection breaker SM1R... with BF09..25A contactors	10	0.035
SM1X31 42R	For motor protection breaker SM1R... with contactors BF09..25D and BF09…25L	10	0.044
SM1X32 41R	For motor protection breaker SM1R... with contactors BF26..38A	10	0.045
Surface mount enclosures IP65 (4X) for SM1P...			
SM1Z17 01P	Width 80mm/3.15"❷	1	0.235
SM1Z17 02P	Width 80mm/3.15". With button for emergency stop	1	0.275
SM1Z17 11P	Width 100mm/3.94"❷	1	0.315
SM1Z17 12P	Width 100mm/3.94". With button for emergency stop	1	0.345
Flush mount enclosure IP65 (4X) for SM1P...			
SM1Z17 05P	Width 87mm/3.42"❷	1	0.205
Surface mount enclosures IP65 (4X) for SM1R...			
SM1Z17 15R	With rotary actuator red/yellow. Width 100mm/3.94"	1	0.350
SM1Z17 10R	With black rotary actuator Width 100mm/3.94"	1	0.350
ENCLOSURE ACCESSORIES AND SPARE PARTS. For SM1Z...P enclosures.			
SM1X17 40P	Emergency stop button. IP65 (4X)	1	0.044
SM1X17 45P	Rubber membrane with rim. IP65 (4X)	1	0.016
SM1X17 46P	Lockable block. IP65 (4X)	1	0.030
Pilot lights.			
23 NEONV❶ V	Green	10	0.006
23 NEONR❶ V	Red	10	0.006
Plastic M25 to ½" NPT entry adapter.			
11 LM M25 PG16	For enclosures SM1Z17 01P and SM1Z17 02P	10	0.009
Starter assembly adapter plates.			
11 SMX90 10	Adapter plate for direct starter comprising breaker SM1... and contactor BG..., BF09A...BF38A	1	0.058
11 SMX90 12	Adapter plate for reversing switch comprising breaker for motor protection SM1… contactors BG..., BF09A...BF38A	1	0.095
11 SMX90 14	Adapter plate for starter star-delta comprising motor protection breaker SM1... and contactors BF09A...BF38A	1	0.118
11 SMX90 18	35mm rail for passage of wires underneath to contactor; for SMX90 14	1	0.025
11 SMX90 19	DIN rail extension 35mm/1.38"	1	0.025

❶ Complete with required voltage. Available voltages:
– AC 50/60Hz 24/110/220...240VAC (indicate 220)/ 380...415VAC (indicate 380).
❷ Complete with rubber membrane.

General and operational characteristics
RIGID SM1 BREAKER-CONTACTOR CONNECTIONS
The SM1X3… connections electrically and mechanically fasten the motor protection breaker together with the contactor. This forms a highly compact single-unit starter for quick installation on a single 35mm DIN rail.
The SM1X3… connections can also be mounted in combination with reversing switches and star-delta starters made with the rigid connections indicated in section 2.

SURFACE MOUNT ENCLOSURES
– Top or bottom entry:
  • SM1Z17 01P and SM1Z17 02P 4 M25-threaded knockouts
  • SM1Z17 11P and SM1Z17 12P 4 threaded knockout with Ø20.5mm/0.81" or Ø26.5mm/1.04"
  • SM1Z17 10R e SM1Z17 15R 4 threaded knockout with Ø20.5mm/0.81" or Ø26.5mm/1.04"
– Possibility of rear entry too
– Protection rating: IP65 (UL Type 4X)
– Holds a breaker, one front-mount auxiliary contact block and either one shunt or undervoltage release; only for SM1Z17 10R and SM1Z17 15R, 2 side-mount auxiliary contact blocks can be fitted as well
– The SM1Z17 10R and SM1Z17 15R rotary actuators can be padlocked with a maximum of 3 padlocks Ø4...8mm/0.16...0.31"
– Earth/ground terminal included
– Operating temperature: -25…+60°C
– Storage temperature: -50...+80°C.

FLUSH MOUNT ENCLOSURES
– Holds a SM1P breaker, one front-mount auxiliary contact block and either one shunt or undervoltage release
– Protection rating: IP65 (UL Type 4X)
– Earth/ground terminal included
– 70x115mm/2.76x4.53" cutout
– Operating temperature: -25…+60°C
– Storage temperature: -50...+80°C.

ENCLOSURE ACCESSORIES
Emergency stop button:
– Turn to release
– Red button Ø35mm/1.38".
Lockable block:
– Prevents closing operation; 3 padlocks maximum Ø4...8mm/0.16...0.31".

STARTER ASSEMBLY ADAPTER PLATES
These accessories permit the assembly of starters, making slim and compact equipment that's easy and quick to install.
The starter adapter plates install on DIN rail 35mm/1.38".

Certifications and compliance
Certifications obtained: cULus.
Certifications pending: EAC, CCC for rigid connections and enclosures.
Compliant with standards: IEC/EN 60947-1, IEC/EN 60947-5-1, UL508, CSA C22.2 n° 141.

1



SM2X11…



SM2X12…



SM2X13 11



SM2X14…



SM2X16…



SM2X18…

Order code	Characteristics	Qty per pkg	Wt
		n°	[kg]
Add-on auxiliary contacts.			
SM2X11 20	Front mount 2NO	10	0.020
SM2X11 11	Front mount 1NO+1NC	10	0.020
SM2X11 02	Front mount 2NC	10	0.020
SM2X12 20	Side mount 2NO	2	0.040
SM2X12 11	Side mount 1NO+1NC	10	0.040
SM2X12 02	Side mount 2NC	2	0.040
SM2X13 11	Side mount. Indicator contacts for thermal and magnetic tripping 1NO+1NC	2	0.040
Undervoltage trip releases.			
SM2X14 230	230VAC 50/60Hz	5	0.100
SM2X14 400	400VAC 50/60Hz	5	0.100
SM2X14 440	440VAC 50/60Hz	5	0.100
Shunt trip releases.			
SM2X16 024	24VAC 50/60Hz	5	0.100
SM2X16 110	110VAC 50/60Hz	5	0.100
SM2X16 230	230VAC 50/60Hz	5	0.100
SM2X16 400	400VAC 50/60Hz	5	0.100
SM2X16 440	440VAC 50/60Hz	5	0.100
Padlockable IP65 (4X) door coupling handle.			
SM2X18 200R	Red/yellow complete with rod length 200mm/7.87”	1	0.115
SM2X18 B200R	Black complete with rod with rod length 200mm/7.87”	1	0.115
Phase separation barriers for SM3R…			
SM3X90 00R	For Type E as per UL508	5	0.175

General and operational characteristics

ADD-ON AUXILIARY CONTACTS
- Insert on the top front or snap on the left side of the breaker
- Maximum combinations: 3 SM1X… blocks with 6 auxiliary contacts in total of which 1 front block and 2 side blocks
- IEC conventional free air thermal current Ith: 10A (5A for SM2X11...)
- IEC rated insulation voltage Ui: 690V (250V for SM2X11...)
- UL/CSA and IEC/EN 60947-5-1 designation: A600 – Q300 (B300 - R300 for SM1X11...)
- Conductor cross section minimum-maximum (1 or 2 wires): 0.75...2.5m or 18...14AWG
- Screw tightening tool: Pz 2
- Maximum tightening torque: 1.2Nm / 10bin
- Width of side-mount auxiliary contacts equal to 0.5 DIN 46880 modules.

UNDERVOLTAGE TRIP RLEASES
- Snap on to the right side of the breaker for motor protection
- Consumption in-rush/holding: 8.5/3VA
- Release voltage: 0.35...0.7Us
- Operating limits: 0.85...1.1Us
- Conductor cross section minimum-maximum (1 or 2 wires): 0.75...2.5mm 2 or 18...14AWG
- Screw tightening tool: Pz 2
- Maximum tightening torque: 1.2Nm / 10lbin
- Width of side-mount auxiliary contacts equal to 1 DIN 46880 module.

SHUNT TRIP RELEASES
- Snap on to the right side of the breaker
- In-rush consumption: 20VA
- Operating limits: 0.85...1.1Us
- Conductor cross section minimum-maximum (1 or 2 wires): 0.75...2.5mm 2 or 18...14AWG
- Screw tightening tool: Pz 2
- Maximum tightening torque: 1.2Nm / 10lbin
- Width of side-mount auxiliary contacts equal to 1 standard DIN 46880 module.

Certifications and compliance

Certifications obtained: cULus, EAC.
Compliant with standards: IEC/EN 60947-1, IEC/EN 60947-5-1, UL508, CSA C22.2 n° 14.

1

Combinations

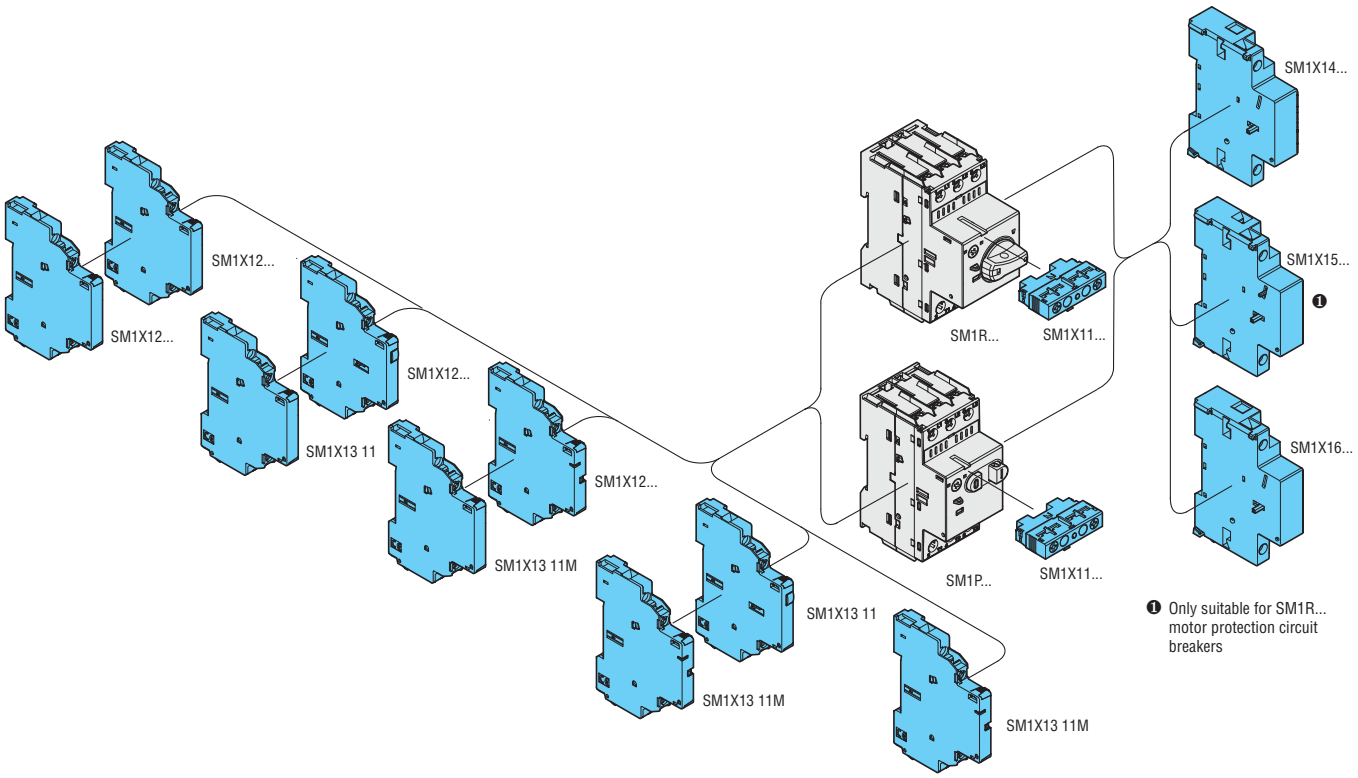

❶ Only suitable for SM1R... motor protection circuit breakers

Three-phase connection busbars.

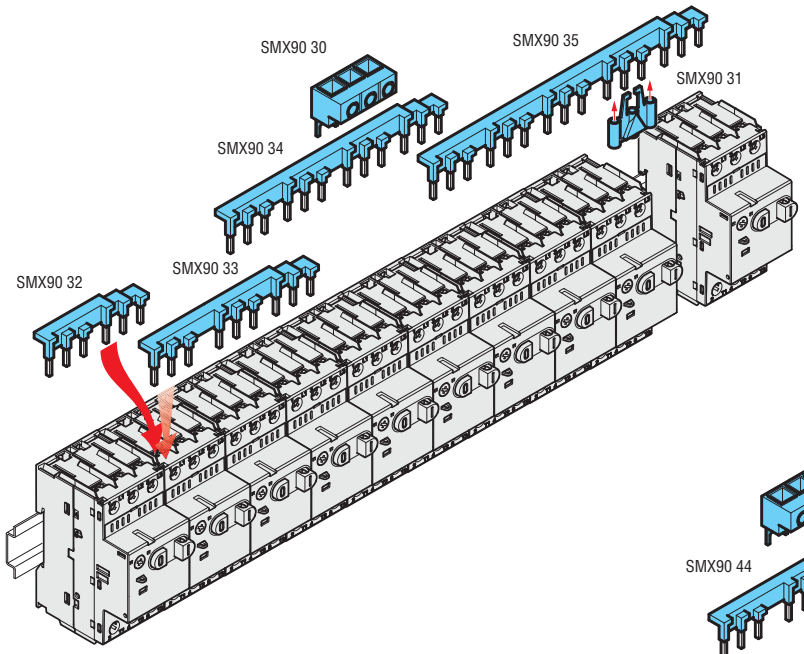

Three-phase connection busbar, 45mm/1.77" spacing (breakers without add-on blocks).

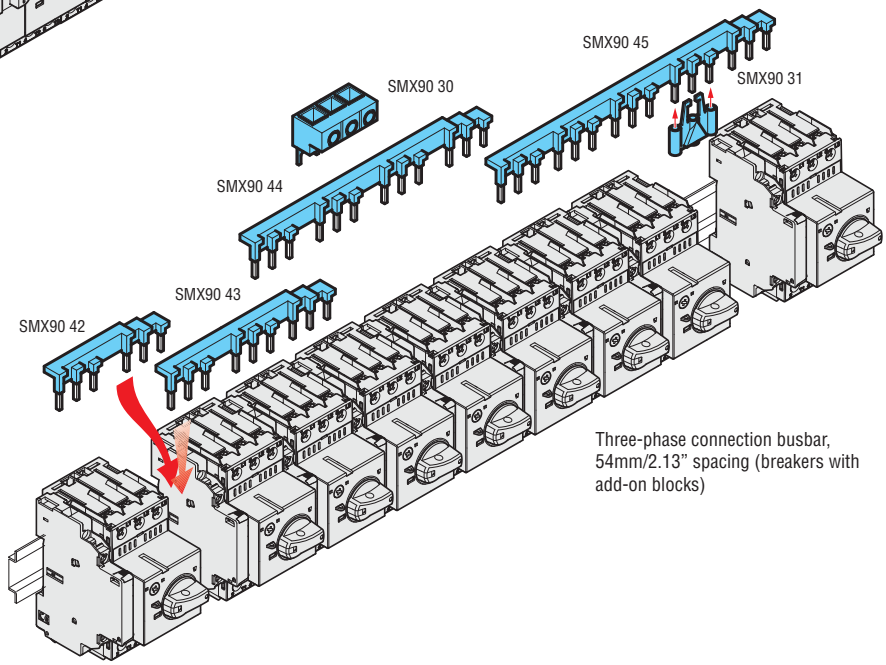

Three-phase connection busbar, 54mm/2.13" spacing (breakers with add-on blocks)

1

Combinations

Rigid SM1P... breaker - contactor connections.

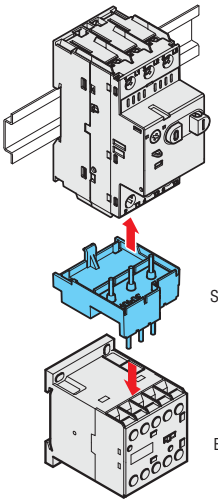

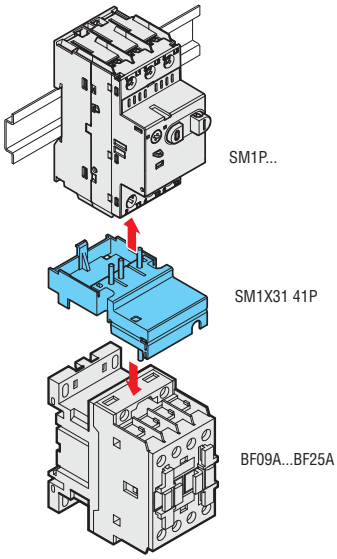

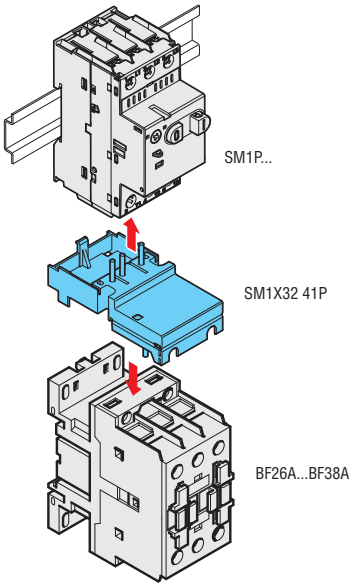

Rigid SM1R... breaker - contactor connections.

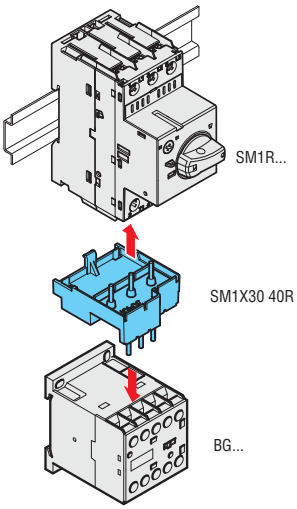

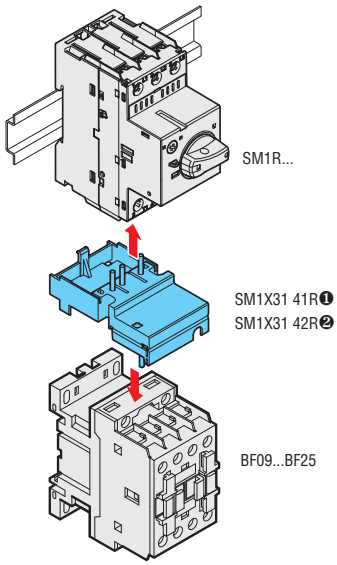

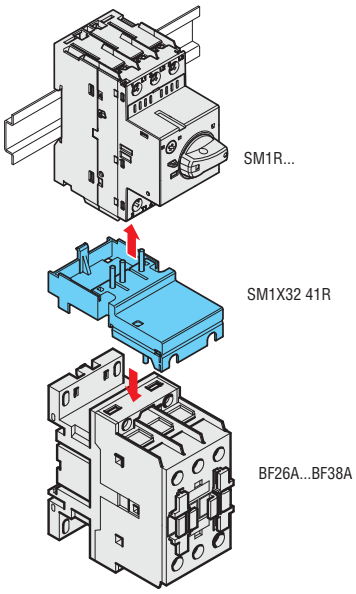

❶ For BF09A...BF25A contactors.
❷ For BF09D…BF25D and BF09L…BF25L contactors.

Padlockable door coupling handle.

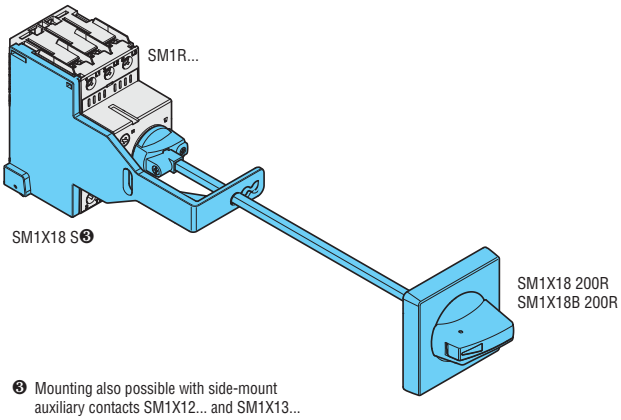

❸ Mounting also possible with side-mount auxiliary contacts SM1X12... and SM1X13...

Combinations

Surface mount enclosures for SM1P... Width 80mm.

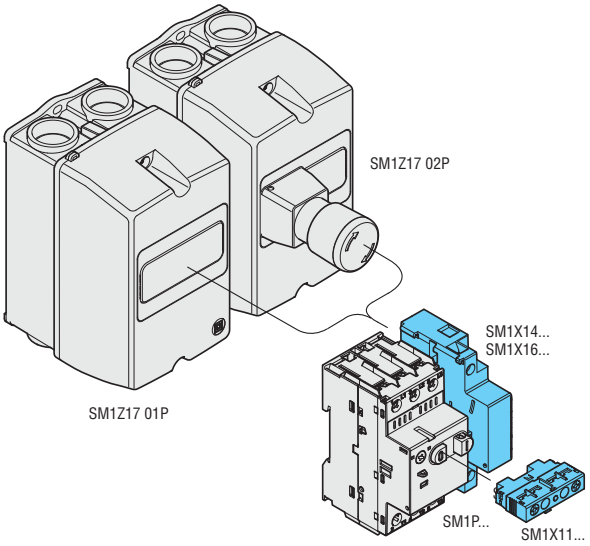

Surface mount enclosures for SM1P... Width 100mm.

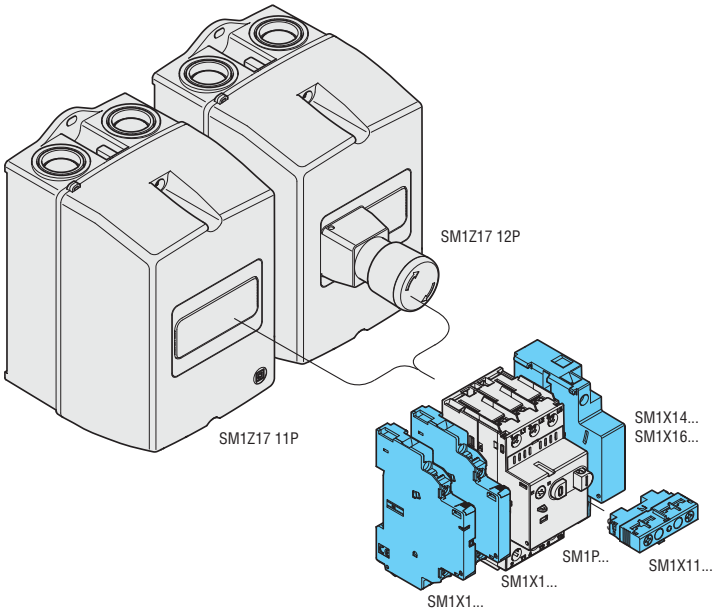

Flush mount enclosures for SM1P... Width 87mm.

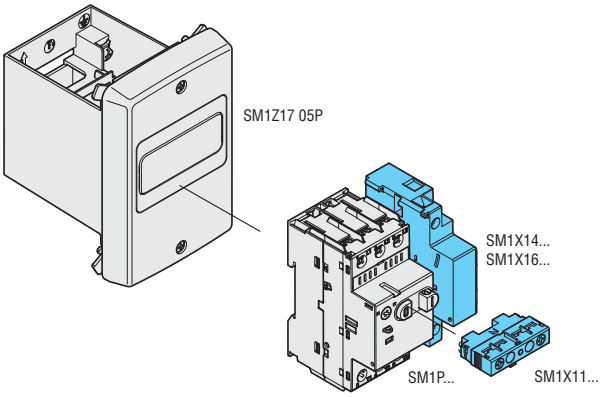

Surface mount enclosures for SM1R... Width 100mm.

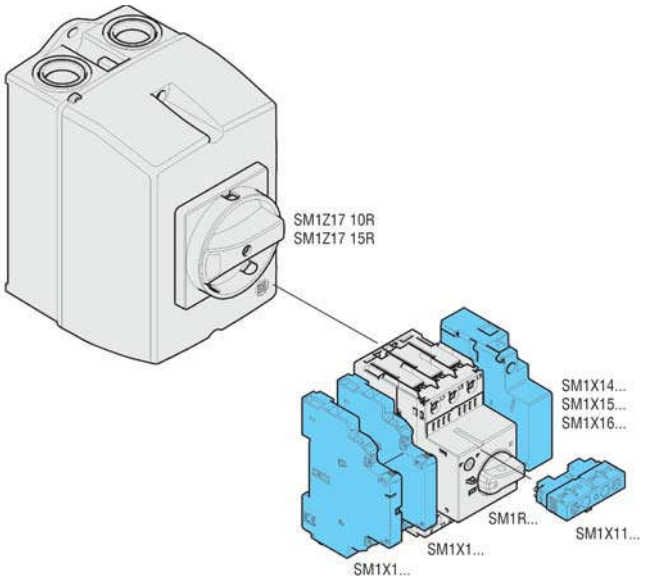

Combinations of SM2... and SM3... motor protection circuit breakers

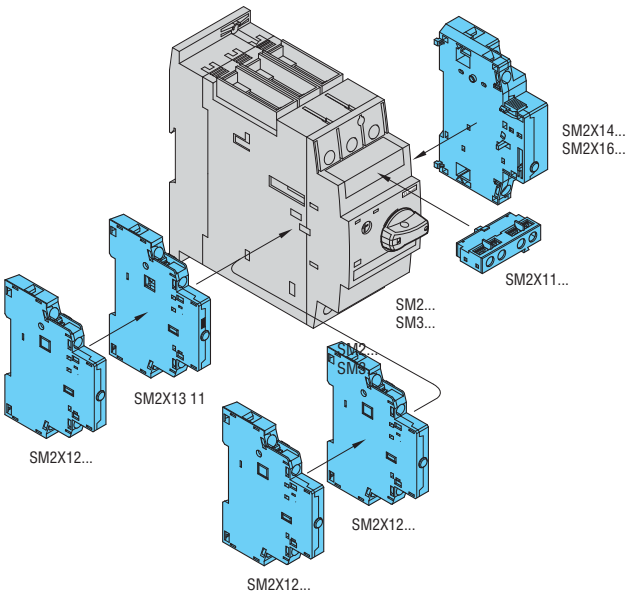

Padlockable door coupling handle.

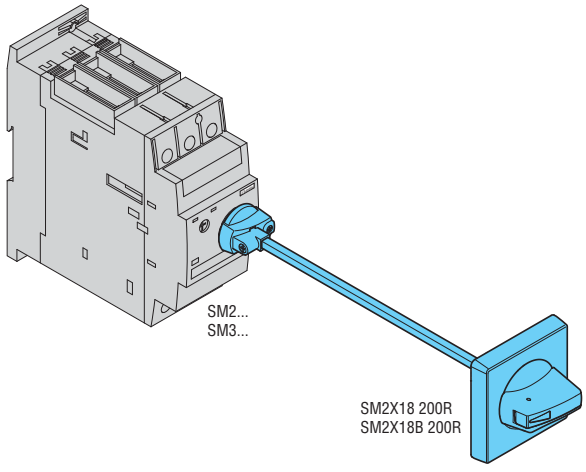

1

SM1P… with side-mount auxiliary contacts

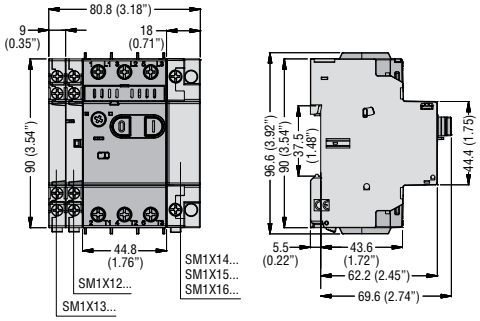

SM1R… with side-mount auxiliary contacts

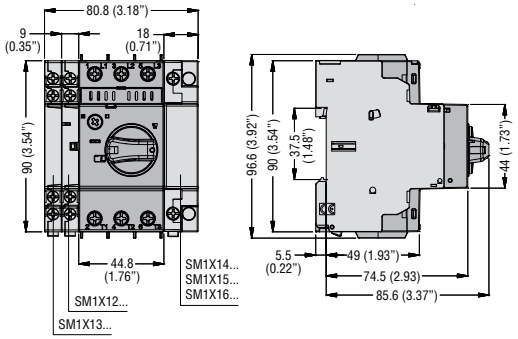

SM1P… with BG… mini-contactors and connection **SM1X30 40P**

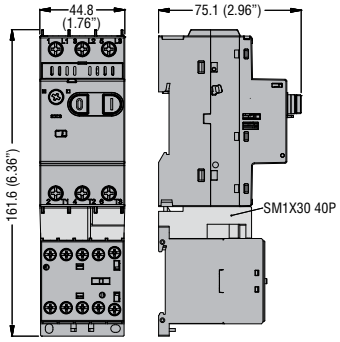

SM1P… with BF09 A...BF25 A... contactors and connection **SM1X31 41P**

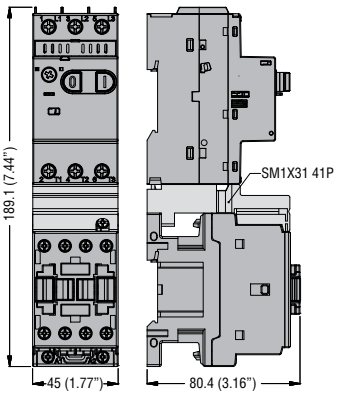

SM1P… with BF26 A...BF38 A... contactors and connection **SM1X32 41P**

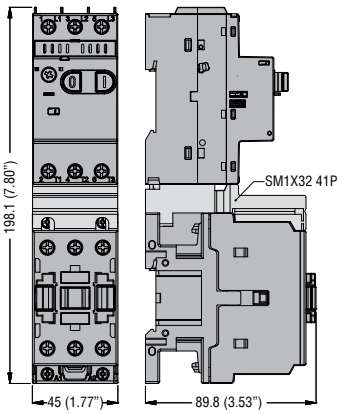

SM1R… with BG… mini-contactors and connection **SM1X30 40R**

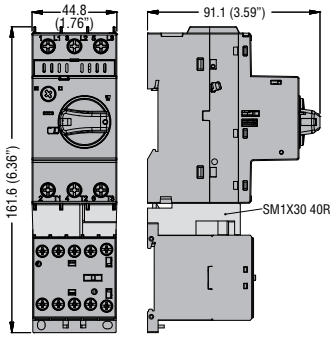

SM1R… with BF09 A...BF25 A... contactors and connection **SM1X31 41R**

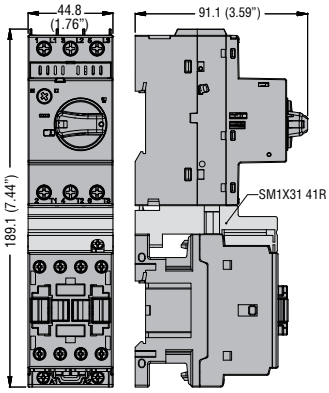

SM1R… with BF09 D...BF25 D... contactors BF09 L...BF25 L... and connection **SM1X31 42R**

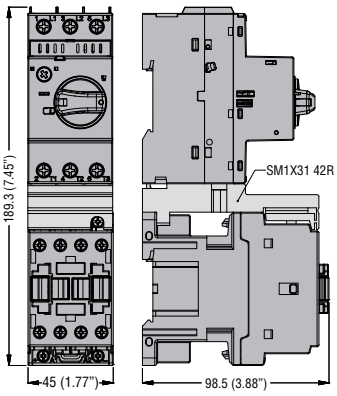

SM1R… with BF26 A...BF38 A... contactors and connection **SM1X32 41R**

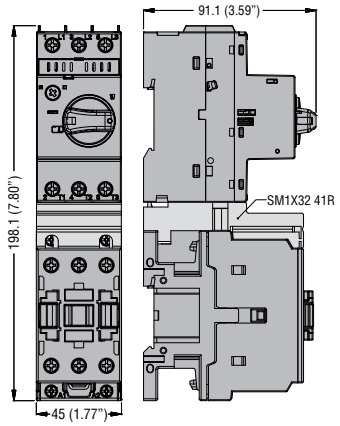

SM1R… padlockable door coupling handle **SM1X18 200R** or **SM1X18B 200R**

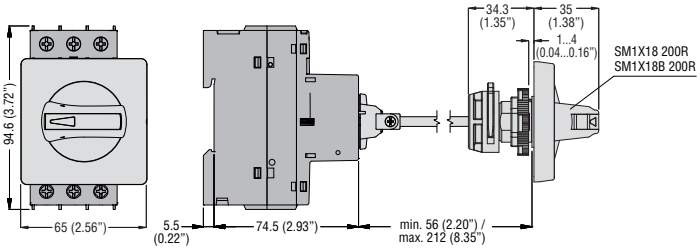

These elements mounted with **SM1… breakers**
without side-mount auxiliary contacts

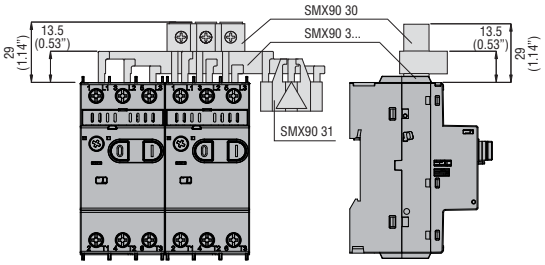

These elements mounted with **SM1… breakers**
with side-mount auxiliary contacts **SMX12…** or **SMX13 11**

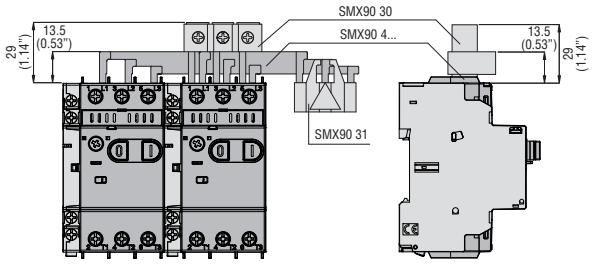

Connection busbars – 45mm/1.77" spacing
SMX90 32 - SMX90 33 - SMX90 34 - SMX90 35

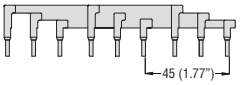

Connection busbars – 54mm/2.13" spacing
SMX90 42 - SMX90 43 - SMX90 44 - SMX90 45

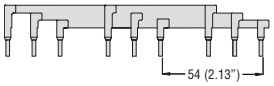

Terminal block for busbar supply **SMX90 30**



Safety cover
SMX90 31



Enclosures **SM1Z17 01P** and **SM1Z17 02P**

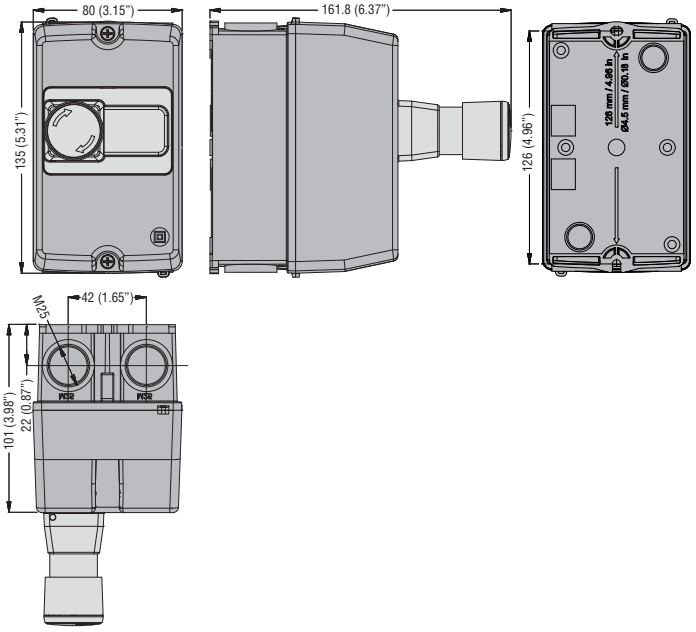

Enclosures **SM1Z17 05P**

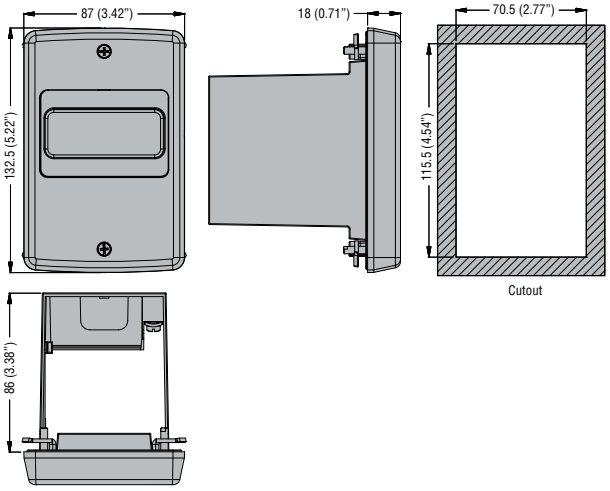

Enclosures **SM1Z17 11P** and **SM1Z17 12P**

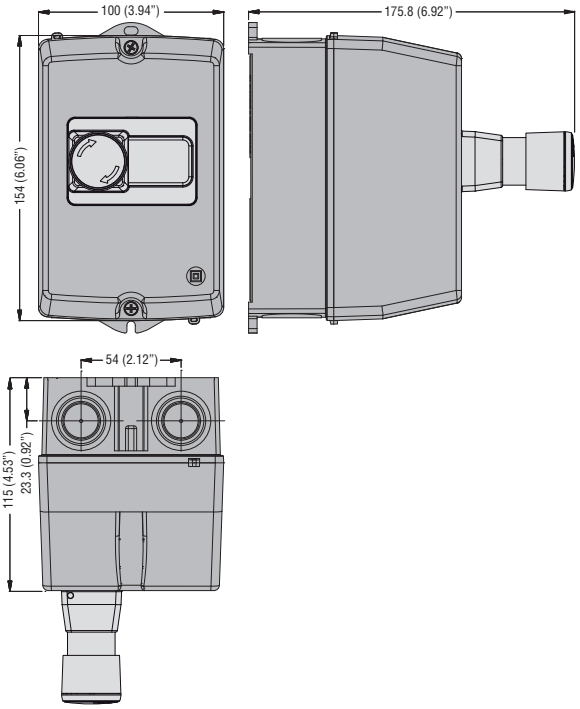

Enclosures **SM1Z17 15R** and **SM1Z17 10R**

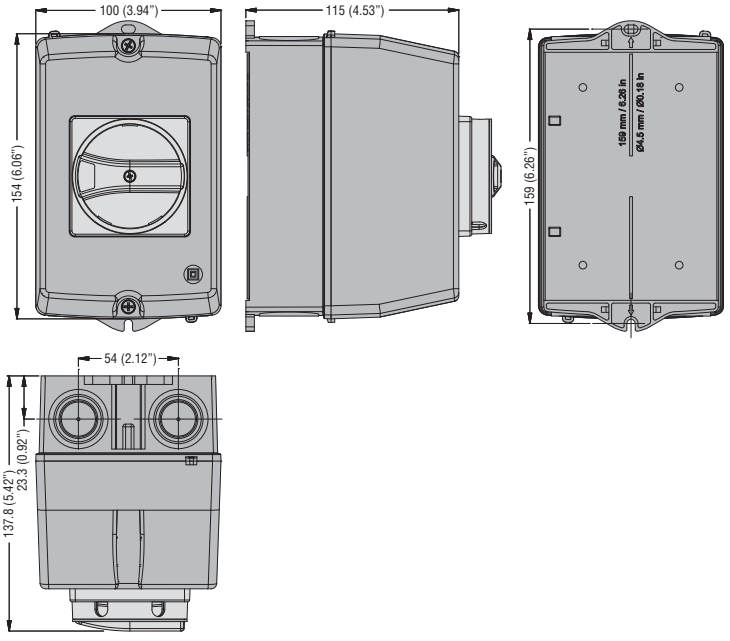

1

SM2… with side-mount auxiliary contacts

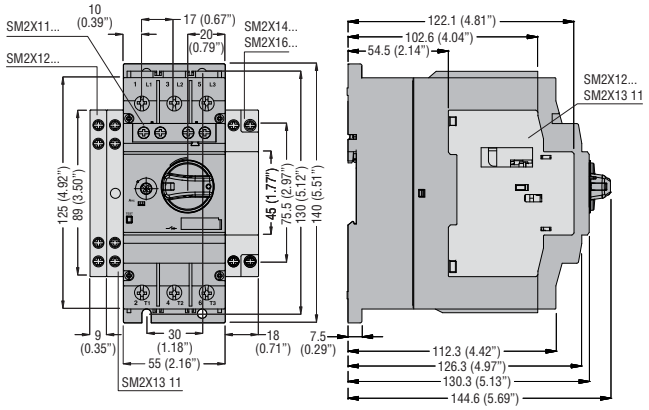

SM3… with side-mount auxiliary contacts

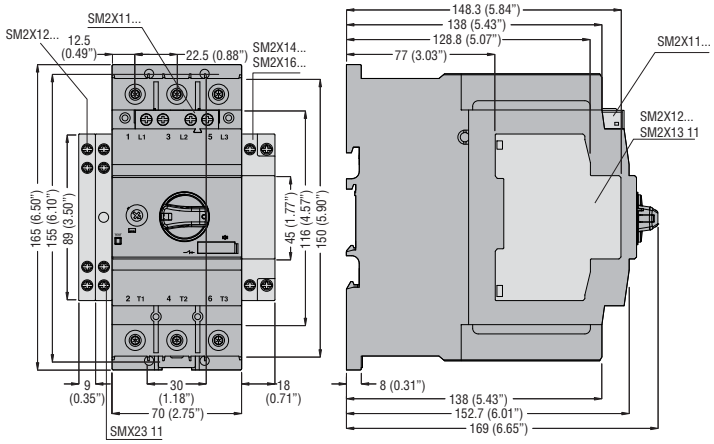

SM2… and **SM3…** padlockable door coupling handle
SM2X18 200R or **SM2X18B 200R**

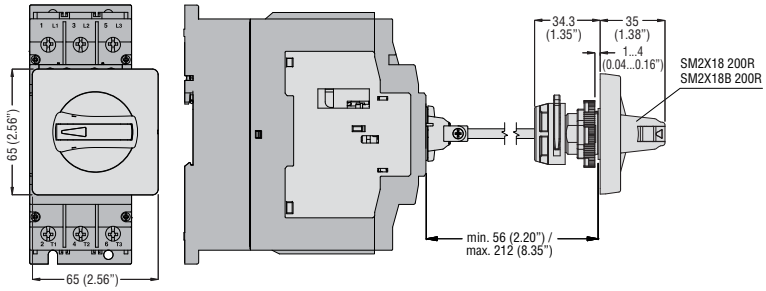

Wiring diagrams

MOTOR PROTECTION CIRCUIT BREAKERS
SM1P…

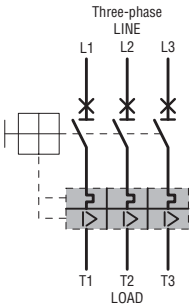

SM1R… - SM2R… - SM3R…

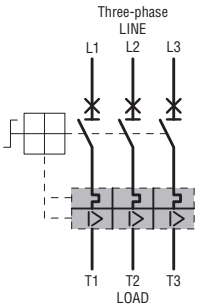

SM1RM…

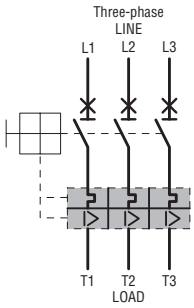

CIRCUIT BREAKERS
SM1PF…

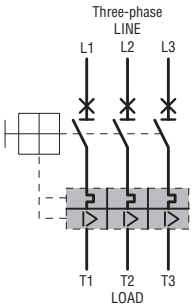

For all motor protection circuit breakers

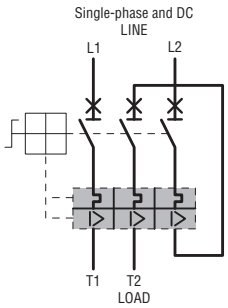

ADD-ON BLOCKS
For SM1… types
Front mount auxiliary contacts

SM1X11 20



SM1X11 11

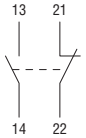

Side mount auxiliary contacts

SM1X12 11

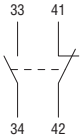

SM1X12 20



SM1X12 02

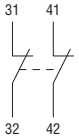

SM1X13 11

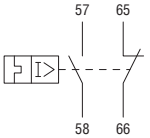

SM1X13 11M

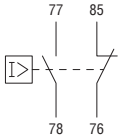

Side mount undervoltage trip releases
SM1X14…



SM1X15…

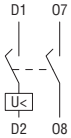

Side mount shunt trip release
SM1X16…

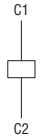

For SM2R… and SM3R types
Front mount auxiliary contacts

SM2X11 20



SM2X11 11

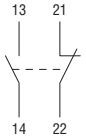

SM2X11 02

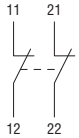

Side mount auxiliary contacts

SM2X12 11

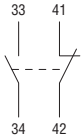

SM2X12 20



SM2X12 02

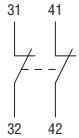

SM2X13 11

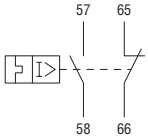

Side mount undervoltage trip release
SM2X14…



Side mount shunt trip release
SM2X16…

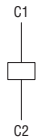

TYPE			SM1P…	SM1R…	SM2R…	SM3R…
Rated insulation voltage Ui		V	690			
Rated impulse withstand voltage		kV	6			
Rated frequency: 50/60Hz						
Maximum rated current		A	40	40	63	100
Number of adjustment ranges		No.	16❶	16	2	3
Total power dissipation		W	6…14	6…14	7.1...20	10...38
Magnetic tripping		A	13 x In❶	13 x In	13 x In	13 x In
Mechanical life		cycles	100,000	100,000	50,000	50,000
Electrical life (Ie max AC3)		cycles	100,000	100,000	25,000	25,000
Maximum terminal tightening torque		Nm	2.5...3	2.5...3	4.5	6
		lbft	1.8...2.2	1.8...2.2	40	53
		Tool	PH2	PH2	PZ2	Allen 4mm
Conductor section minimum and maximum (1 or 2 wires)	AWG	No.	16…8	16…8	18...3	10...1/0
Flexible without lug		mm^2	1…10	1…10	0.75...25	10...50
AMBIENT CONDITIONS						
Temperature	operating	°C	-20...+60❷	-20...+60❷	-20...+70❷	-20...+70❷
	storage	°C	-50...+80	-50...+80	-50...+80	-50...+80
	compensation	°C	-20...+50	-20...+50	-5...+40	-5...+40
Maximum altitude		m	3000			
Mounting position			Any			
Fixing			On 35mm DIN rail or screw via accessory		On 35mm DIN rail or screw	

E.g. PH = Phillips; PZ = Pozidriv; Allen is metric type.

❶ SM1PF00 20 has a single 0.2A thermal adjustment and magnetic tripping at 6 x In (1.2A).

❷ When fitting more than one breaker side by side, without leaving space between each to consent free air circulation on the breaker sides, and have simultaneous operation, the thermal trip adjuster must be positioned at a value 15% higher than the rated motor current.

THERMAL TRIPPING CURVE (AVERAGE TIMES)

Three-phase balanced operation

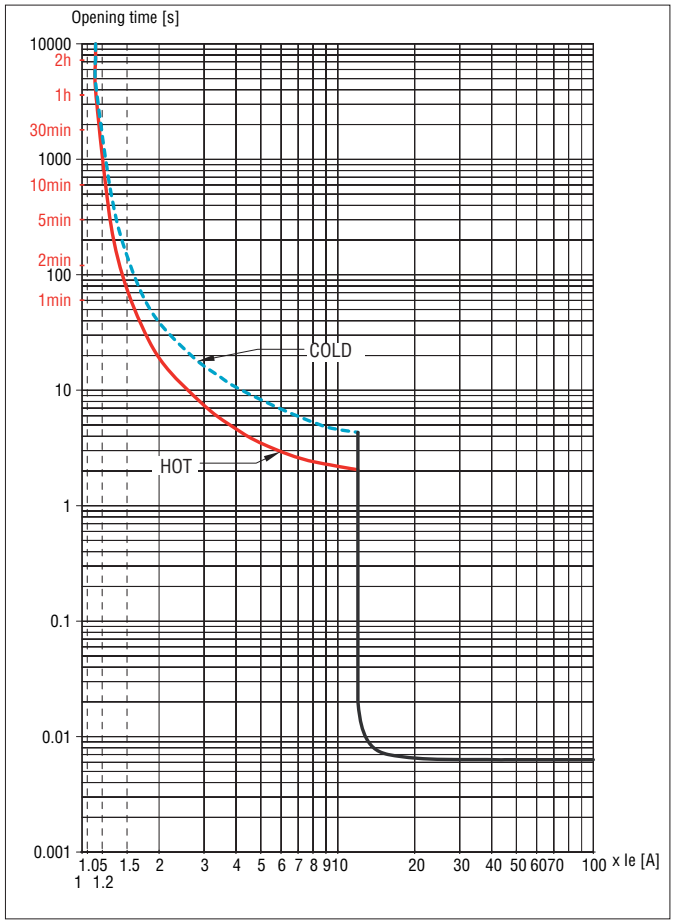

Two-phase operation (phase failure/single phasing)

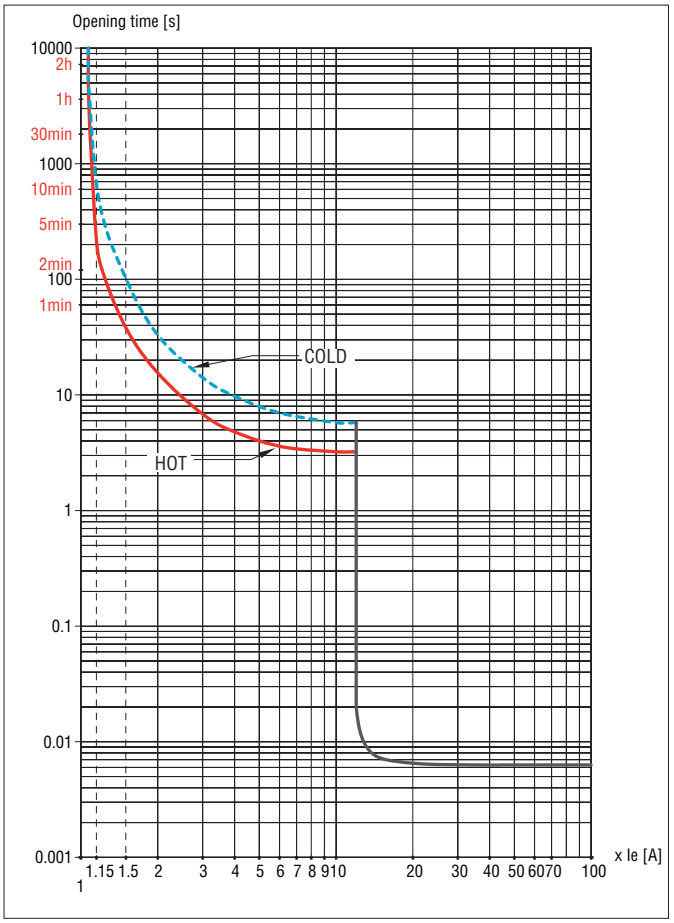

Tripping times can have a ±20% deviation with respect to the average tripping curve value above.