Rittal – The System.

Faster – better – everywhere.



Assembly and operating instructions

EN

Contents

1 Notes on documentation 3
1.1 CE labelling 3
1.2 Storing the documents 3
1.3 Symbols used in these operating instructions 3
1.4 Other applicable documents 3

2 Safety notes 3

3 Device description 4
3.1 TÜV-tested output measurement to DIN EN 14511 4
3.2 Functional description 4
3.2.1 How it works 4
3.2.2 Control 5
3.2.3 Bus mode (e-Comfort controller only) 5
3.2.4 Safety devices 5
3.2.5 Condensation 5
3.2.6 Filter mats 5
3.2.7 Door limit switch 5
3.2.8 Additional interface X3 6
3.3 Proper use, foreseeable misuse 6
3.4 Scope of supply 6

4 Assembly and connection 6
4.1 Choosing the installation site 6
4.2 Notes on assembly 6
4.2.1 General 6
4.2.2 Layout of the electronic components in the enclosure 7
4.3 Fitting the cooling unit 7
4.3.1 Making the cut-outs 8
4.3.2 External mounting of the cooling unit 8
4.3.3 Partial internal mounting of the cooling unit 8
4.3.4 Full internal mounting of the cooling unit 9
4.4 Connecting the condensate discharge 10
4.5 Notes on electrical installation 11
4.5.1 Connection data 11
4.5.2 Overvoltage protection and supply line load 11
4.5.3 Three-phase devices 11
4.5.4 Door limit switch 11
4.5.5 Notes on the flicker standard 11
4.5.6 Potential equalisation 12
4.6 Making the electrical connection 12
4.6.1 Bus connection (only when interconnecting several units with a Comfort controller) 12
4.6.2 Connection X3 for serial interface 12
4.6.3 Mounting external transformer 12
4.6.4 Installing the power supply 13
4.7 Finalising assembly 15
4.7.1 Installing the filter media 15
4.7.2 Fitting the cooling unit 15
4.7.3 Setting the filter mat monitor (only with e-Comfort controller) 16

5 Start-up 16

6 Operation 16
6.1 Control using the Basic controller 16
6.1.1 Properties 16
6.1.2 Operating and error display 17
6.1.3 Test mode with the Basic controller 18
6.1.4 Setting the temperature 18
6.1.5 Resetting the Basic controller 18
6.2 Control using the e-Comfort controller 18
6.2.1 Properties 19
6.2.2 Eco mode 19
6.2.3 Launching test mode 19
6.2.4 General information about programming 20
6.2.5 Editable parameters 21
6.2.6 Programming overview 22
6.2.7 Defining system messages for evaluation 23
6.2.8 Setting the master/slave identifier 24
6.2.9 Evaluating system messages 24
6.2.10 Reset the e-Comfort controller 26

7 Inspection and maintenance 26
7.1 Compressed air cleaning 3304.xxx, 3305.xxx 26
7.2 Compressed air cleaning 3328.xxx, 3329.xxx, 3332.xxx 30
7.3 Installation instructions for NEMA 4X devices 35

8 Storage and disposal 36

9 Technical details 36
9.1 Technical specifications 36
9.2 Performance diagrams 43

10 List of spare parts 44

11 Appendix 47
11.1 Cut-out and hole sizes 47
11.1.1 Dimensions for external mounting 47
11.1.2 Dimensions for partial internal mounting 50
11.1.3 Dimensions for full internal mounting 51
11.2 Electrical wiring plan 52

EN

1 Notes on documentation

1.1 CE labelling

Rittal GmbH & Co. KG confirms the conformity of the cooling unit with the European Union's Machinery Directive 2006/42/EC and EMC Directive 2014/30/EC. A corresponding declaration of conformity has been issued. This can be found at the end of this document, or on the Rittal homepage.

CE

1.2 Storing the documents

The assembly and operating instructions as well as all other applicable documents are an integral part of the product. They must be issued to everyone who works with the unit and must always be available and on hand for operating and maintenance personnel.

1.3 Symbols used in these operating instructions

The following symbols are used in this documentation:



Danger!
A dangerous situation in which failure to comply with the instructions will result in death or severe injury.



Warning!
A dangerous situation which may cause death or serious injury if the instructions are not followed.



Caution!
A dangerous situation which may lead to (minor) injuries if the instructions are not followed.



Note:
Important notices and indication of situations which may result in material damage.

■ This symbol indicates an "action point" and shows that you should perform an operation or procedure.

1.4 Other applicable documents

Assembly and operating instructions in paper and digital format are available for the unit types described here.
We cannot accept any liability for damage associated with failure to observe these instructions. Where applicable, the instructions for any accessories used also apply.

2 Safety notes

Please observe the following general safety notes when assembling and operating the unit:

– Assembly, installation and servicing may only be performed by properly trained specialists.
– Screw the enclosure to the floor to prevent it from tipping over when the cooling unit is installed.
– Do not obstruct the air inlet and air outlet of the cooling unit inside and outside the enclosure (see section 4.2.2 "Layout of the electronic components in the enclosure").
– To ensure problem-free opening and closing of the enclosure door, use a ride-up door roller (refer to the accessories in the Rittal Catalogue). This raises the door slightly and balances out the weight of the cooling unit, to prevent buckling of the door and associated seal problems.
– The heat loss of the components installed in the enclosure must not exceed the useful cooling power of the cooling unit.
– Cooling units with item numbers: 3303.xxx, 3361.xxx, 3304.xxx, 3305.xxx, 3328.xxx, 3329.xxx and 3332.xxx must be transported in an upright position and protected from tipping over.
– Units with item numbers 3302.xxx and 3366.xxx must be transported lying flat.
– Shipping braces must be used when transporting a unit that has already been mounted (on the enclosure). A wooden structure made from square timbers or boards to support the cooling unit at the bottom (see fig. 1) is suitable for this purpose. The pallet should be big enough to prevent the enclosure and cooling unit overturning. If the cooling unit is mounted on a door, ensure the door is kept closed during transport.
– Use only original spare parts and accessories
– Do not make any changes to the cooling unit other than those described in these instructions or associated instructions.
– Risk of burns! On cooling units with automatic condensate evaporation, the surface of the thermal element will get very hot during operation, and will remain so for some time afterwards.
– The mains connector of the cooling unit must only be connected and disconnected with the system de-energised. Connect the protective device specified on the rating plate.

EN

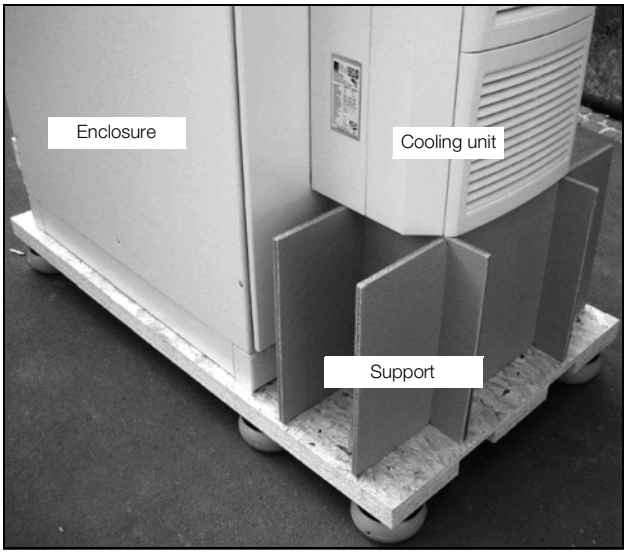

Fig. 1: Transporting an enclosure/cooling unit combination

3 Device description

Depending on the model chosen, your cooling unit may vary in appearance from the illustrations contained in these instructions. However, the functions are identical in principle.

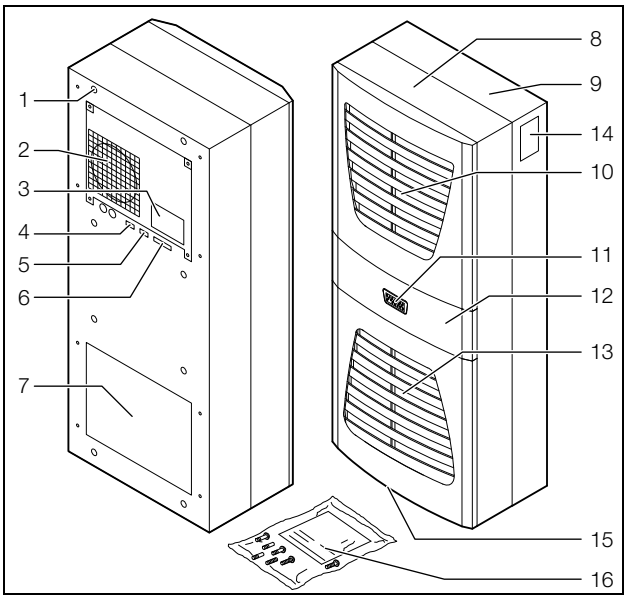

Fig. 2: Device description

Key

1 Blind rivet nut
2 Evaporator fan
3 Electrical wiring plan
4 X2 master-slave connection
5 X3 optional serial interface
6 X1 terminal strip
7 Air outlet hole
8 Front half of the enclosure
9 Rear half of the enclosure
10 Louvred grille for air outlet
11 Display
12 Infill panel
13 Louvred grille for air inlet
14 Rating plate
15 Condensate discharge
16 Dispatch bag

3.1 TÜV-tested output measurement to DIN EN 14511

All TopTherm cooling units in the output range from 300 to 4000 W are tested to the latest EN 14511-1-4:2013-12 standard by independent test institute TÜV Nord. This means you have peace of mind about the design of the climate control solution and you can be sure you are getting the performance you are paying for.

3.2 Functional description

3.2.1 How it works

The cooling unit (compression refrigeration system) comprises four main components (see fig. 3): the evaporator (1), the refrigerant compressor (2), the condenser (3), and the control or expansion valve (4), which are connected by suitable pipework. This circuit is filled with a readily boiling substance, the refrigerant. The refrigerant R134a (CH_2FCF_3) is chlorine-free. Its Ozone Depletion Potential (ODP) is 0, making it very eco-friendly. A filter dryer (5) which is integrated into the hermetically sealed cooling circuit provides effective protection against moisture, acid, dirt particles, and foreign bodies within the cooling circuit.

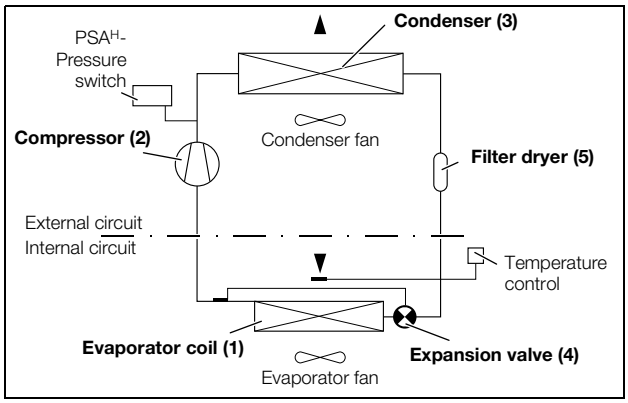

Fig. 3: Cooling circuit

In the evaporator coil (1), the liquid refrigerant is converted to a gaseous state. The energy needed for this purpose is taken from the enclosure air in the form of heat, which has the effect of cooling the enclosure air. In the compressor (2), the refrigerant is heavily compressed, so that it achieves a higher temperature inside the condenser (3) than the ambient air. This means that excess heat may be emitted to the ambient air via the surface of the condenser, as a result of which the temperature of the refrigerant drops and it is converted back into liquid. It is re-injected into the evaporator coil via a thermostatic expansion valve (4), which causes it to cool down further, and is then once again able to absorb the energy from the enclosure air in the evaporator coil. The whole cycle begins again.

3.2.2 Control

Rittal enclosure cooling units are fitted with a controller for setting the functions of the cooling unit.
Depending on the design, this is either a Basic controller (operating status display via LED) or an e-Comfort controller (display plus extended functions, see section 6 "Operation").

3.2.3 Bus mode (e-Comfort controller only)

The serial unit interface X2 allows you to create a bus connection with up to ten cooling units using the master-slave cable (shielded, four-wire cable, Model No. 3124.100). This allows you to implement the following functions:

– Parallel unit control (the cooling units in the network can be switched on and off simultaneously)
– Parallel door status message ("door open")
– Parallel collective fault message

Data is exchanged via the master-slave connection. During commissioning, assign an address to each unit that also includes the identifier "master" or "slave".

3.2.4 Safety devices

– In the cooling cycle, the cooling units (with the exception of type 3302.xxx) have a tested pressure switch to EN 12 263 which is set to maximum PS (permissible pressure); this operates via an automatic reset device whenever the pressure drops again
– Temperature monitoring prevents the evaporator coil from icing over. If there is a risk of icing, the compressor switches itself off and automatically switches itself back on again at higher temperatures
– The refrigerant compressor and the fans are equipped with thermal winding shields to protect against excess current and excess temperatures
– In order to allow a reduction of pressure inside the compressor and hence a safe restart, once it has been switched off (e.g. upon reaching the set temperature via the door limit switch function or via de-energising), the device will switch back on with a delay of 180 seconds
– The device has floating contacts on the connection pins (terminals 3 – 5), via which system messages from the device may be polled, e.g. using a PLC (1 x change-over contact Basic controller, 2 x normally open contacts e-Comfort controller)

3.2.5 Condensation

At high levels of humidity and low temperatures inside the enclosure, condensation may form on the evaporator coil.

The cooling units (except 3302.xxx, 3303.xxx and 3361.xxx) have automatic, electric condensate evaporation. The thermal component used for this purpose is based on self-regulating PTC technology. Condensate arising on the evaporator coil is collected in a tank in the external circuit of the cooling unit, and partially evaporated via the airflow. When the water level rises, the water enters the PTC thermal component and is evaporated (through-flow heater principle). The water vapour streams out of the cooling unit with the airflow from the external fan.
The PTC thermal component is permanently connected and has no switchpoint. It is protected against short-circuits with miniature fuses (F1.1, F1.2). If the fuse has tripped, any condensation is drained off via the safety overflow.
For unit types 3302.xxx, 3303.xxx and 3361.xxx, the condensate is routed downwards out of the unit via a drain pipe on the evaporator coil divider panel. For this purpose, a hose must be connected to the condensate nozzle (see section 4.4 "Connecting the condensate discharge"). External condensate evaporators are available as accessories for these unit types (refer also to the accessories in the Rittal Catalogue).

3.2.6 Filter mats

The entire cooling unit condenser is covered with a dirt-repelling, easy-to-clean RiNano coating. In many applications, therefore, the use of filter media is unnecessary, particularly with dry dusts.
For dry, coarse dust and lint in the ambient air, we recommend installing an additional PU foam filter mat (available as an accessory) in the cooling unit. Depending on the incidence of dust, you will need to replace the filter mat from time to time.
For air containing oil condensate, we recommend the use of metal filters (also available as an accessory). These may be cleaned with suitable detergents and re-used.
Function of the filter mat monitor (with e-Comfort controller only):
Dirt on the filter mat is automatically determined by measuring the temperature difference in the external circuit of the cooling unit. As the level of filter mat soiling increases, the temperature difference will increase. The setpoint value of the temperature difference in the external circuit adapts automatically to the relevant operating points in the performance diagrams. Hence there is no need to readjust the setpoint value for different unit operating points.

3.2.7 Door limit switch

The cooling unit may be operated with a floating door limit switch connected. The door limit switch is not included with the supply (available as an accessory, Model No. 4127.010).
The door limit switch function causes the fans and the compressor in the cooling unit to be switched off after approximately 15 seconds when the enclosure door is opened (contacts 1 and 2 closed). This prevents the formation of condensation inside the enclosure while the enclosure door is open. In order to prevent damage to the unit, it is equipped with an ON delay: The evaporator fan cuts back in with a delay of approximately 15 seconds after the door has been closed, while the condens-

er fan and compressor switch on after approximately 3 minutes.

Note:
– No external voltage may be applied to the door contacts (terminals 1 and 2).
– For cooling units with basic control, the evaporator fan continues to run even when the door is open.

3.2.8 Additional interface X3

Note:
The electrical signals at the interface are of an extra-low voltage (not extra-low safety voltages to EN 60 335).

An additional interface card may be connected to the 9-pole SUB-D connector X3 in order to incorporate the cooling unit into higher-level monitoring systems (available as an accessory, interface card Model No. 3124.200).

3.3 Proper use, foreseeable misuse

The cooling unit is only intended for cooling connected enclosures. Any other use is not permitted.
– The unit must not be installed and operated in locations which are accessible to the general public (see DIN EN 60335-2-40, paragraph 3.119).
– The unit is designed solely for stationary use.

The cooling unit is state of the art and built according to recognised safety regulations. Nevertheless, improper use can pose a threat to the life and limb of the user or third parties, or result in possible damage to the system and other property.

Consequently, the cooling unit must only be used properly and in a technically sound condition! Any malfunctions which impair safety should be rectified immediately.

Proper use also includes the observance of the documentation provided, and compliance with the inspection and maintenance conditions.

Rittal GmbH & Co. KG is not liable for any damage which may result from failure to comply with the documentation provided. The same applies to failure to comply with the valid documentation for any accessories used.
Inappropriate use may be dangerous. Examples of inappropriate include:
– Use of the cooling unit over long periods with the enclosure open.
– Use of impermissible tools.
– Improper operation.
– Improper rectification of malfunctions.
– Use of accessories not approved by Rittal GmbH & Co. KG.

3.4 Scope of supply

The unit is supplied in a packaging unit in a fully assembled state.
Please check the scope of supply for completeness.

Qty.	Description
1	Enclosure cooling unit
1 1 1 1 4 – 10	Dispatch bag: – Assembly and operating instructions – Self-adhesive tape – Connector X1 – Grub screws – Nuts, washers
1	Drilling template

Tab. 1: Scope of supply

4 Assembly and connection

4.1 Choosing the installation site

When choosing the installation site for the enclosure, please observe the following:
– The site for the enclosure, and hence the arrangement of the cooling unit, must be carefully selected so as to ensure good ventilation (clearance between units and clearance between the unit and the wall must be at least 200 mm in each case).
– The cooling unit must be installed and operated in a vertical position (maximum deviation: 2°).
– The installation site must be free from excessive dirt, aggressive ambient conditions and moisture.
– The ambient temperature must be within the limits specified on the rating plate.
– It must be possible to fit a condensate discharge (see section 4.4 "Connecting the condensate discharge").
– The mains connection data as stated on the rating plate of the unit must be guaranteed.

4.2 Notes on assembly

4.2.1 General

– Check the packaging carefully for signs of damage. Traces of oil on damaged packaging are an indication of refrigerant loss and leakages. Any packaging damage may be the cause of a subsequent functional failure.
– The enclosure must be sealed on all sides (IP 54). Increased condensation will occur if the enclosure is not airtight.
– In order to avoid excessive condensation inside the enclosure, we recommend installing a door limit switch (e.g. 4127.010) which deactivates the cooling unit when the enclosure door is opened (see section 3.2.7 "Door limit switch").

4.2.2 Layout of the electronic components in the enclosure

Note:
Risk of condensation!
When arranging the electronic components inside the enclosure, please ensure that the cold airflow from the cooling unit is not directed at active components. Please also ensure that the cold airflow is not directed at the warm exhaust airflow from active components such as converters. This may lead to an air short-circuit and therefore prevent adequate climate control, or may even cause the cooling unit's internal safety devices to cease cooling operation.

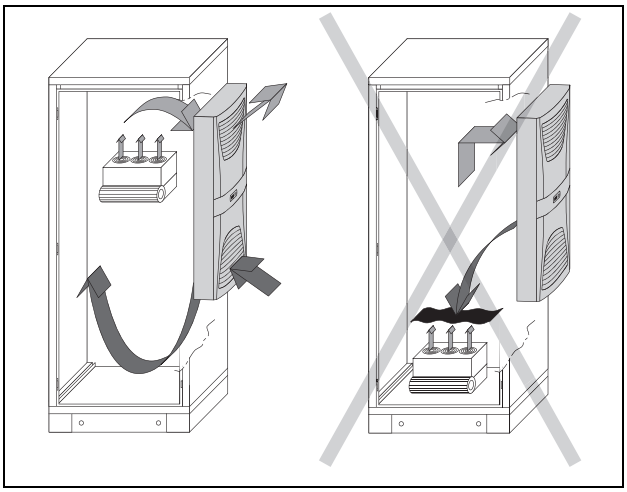

Fig. 4: Never direct the cold airflow at active components

Air diversion components are available as accessories – please refer to the Rittal Catalogue.
It is important to ensure even air circulation inside the enclosure. Under no circumstances should air inlet and outlet openings be obstructed, otherwise the cooling performance of the unit will be reduced. Ensure the distance "x" (see fig. 5) from components and other installed enclosures so that the required air circulation is not obstructed and prevented.

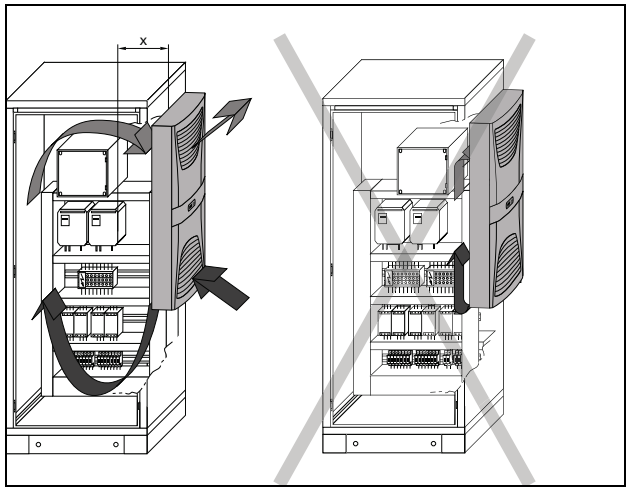

Fig. 5: Air circulation inside the enclosure

4.3 Fitting the cooling unit

The enclosure cooling unit may optionally be externally mounted on the enclosure (1), partially internally mounted (2) or fully internally mounted (3):

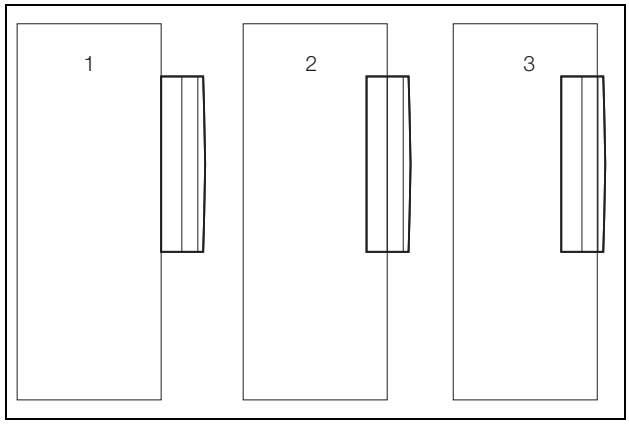

Fig. 6: Installation method

To this end, cut the side panel or door of the enclosure as per the drilling template included with the supply, and drill the relevant holes.

Note:
Units of type 3302.xxx and 3366.xxx can only be either externally mounted or fully internally mounted.
Units of type 3332.xxx can only be either externally mounted or partially internally mounted; they cannot be mounted in lockable doors on 600/1200 wide TS enclosures.
To mount units 3328.xxx, 3329.xxx and 3332.xxx in the TS side or rear panel, we recommend using enclosure panel fasteners 8800.071 (see Rittal Catalogue). For high dynamic loads and mounting on the enclosure door, we recommend using reinforced door hinges 8800.710 (see Rittal Catalogue). Units with protection category NEMA 4X are only suitable for external mounting.

EN

4.3.1 Making the cut-outs

- Affix the supplied drilling template to the side panel or door of the enclosure using adhesive tape.

There are dimensioning lines on the drilling template to suit the various installation options for your cooling unit.

- Using the dimension drawings (see Appendix), identify the valid lines and dimensions for your installation type on the drilling template.

Caution!
Carefully deburr all drilled holes and cut-outs to prevent injuries caused by sharp edges.

- Mark, drill and deburr the holes.
- Make the cut-outs including the line width as per the drilling template.
- Deburr the cut-outs.

4.3.2 External mounting of the cooling unit

- Cut the supplied sealing tape to the correct length and stick it carefully along the back of the unit so that no gaps are left at the joints.

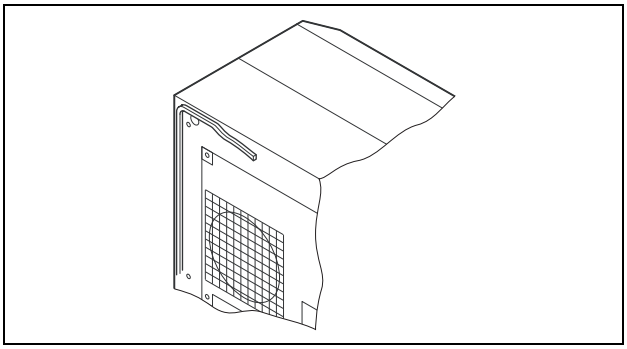

Fig. 7: Applying the self-adhesive tape

- Screw the supplied grub screws into the blind nuts on the rear of the unit.
- Secure the unit using the supplied washers and nuts.

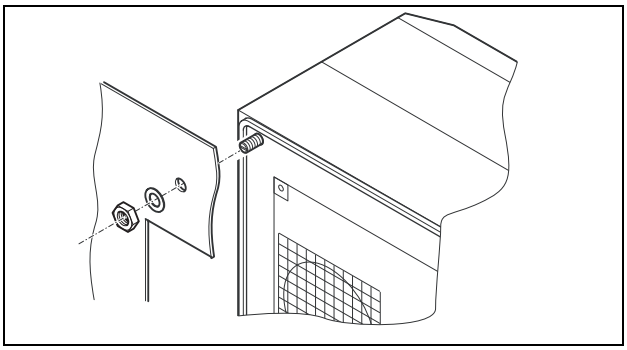

Fig. 8: Securing the cooling unit (all models except 3302.1xx)

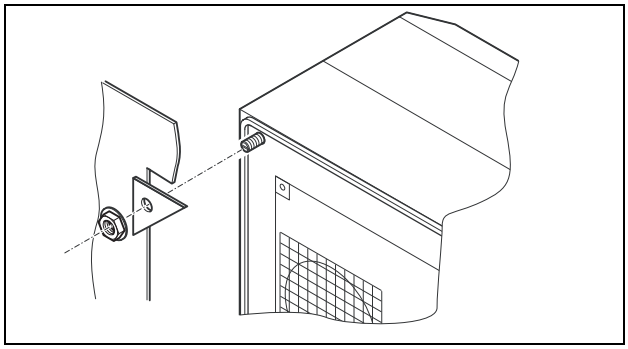

Fig. 9: Securing the cooling unit (3302.1xx only "external mounting")

4.3.3 Partial internal mounting of the cooling unit

- Carefully remove the louvred grille and, where applicable, the infill panel, from the enclosure by pulling forwards.
- Carefully disconnect the connector from the rear of the display and gently push it inwards through the cable gland.

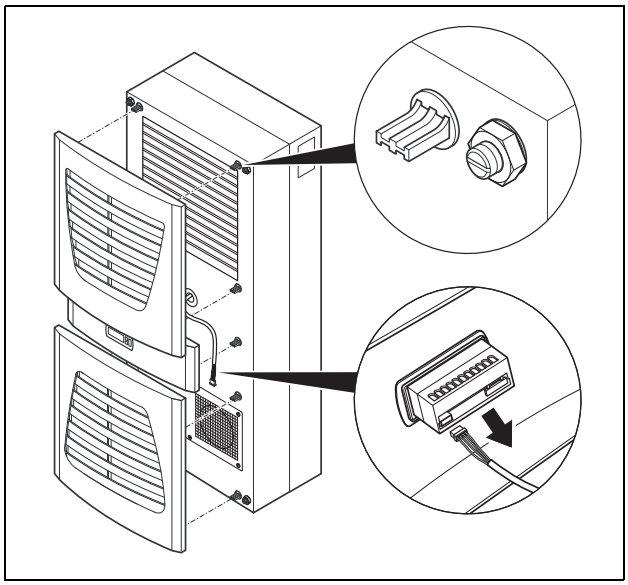

Fig. 10: Removing the louvred grille & disconnecting the display

Caution!
Stability of the cooling unit is only guaranteed in its assembled state. Brace the rear half of the enclosure to prevent it from falling over before removing the front half.

- Loosen the four nuts on the front half of the enclosure and pull the enclosure forwards by approx. 5 cm.
- Loosen the flat-pin connectors of the PE conductor between the two enclosure halves.
- Disconnect the fan connection.
- Remove the front enclosure tray completely.

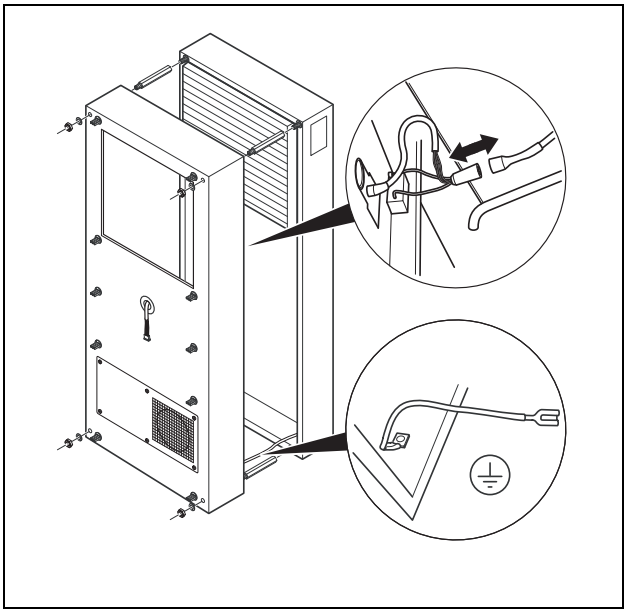

Fig. 11: Removing the cover

- Remove the four spacer bolts.
- Cut the supplied sealing tape to the correct length and stick it carefully along the inside of the rear enclosure half so that no gaps are left at the connection points.

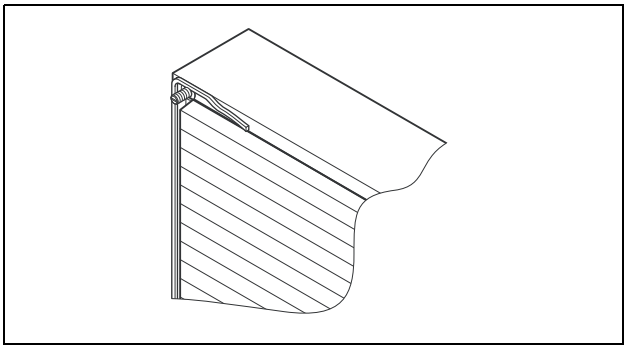

Fig. 12: Applying the self-adhesive tape

- Push the rear enclosure half into the mounting cut-out and secure it with the four spacer bolts.
- Push the display cable through the cable gland of the front enclosure half.

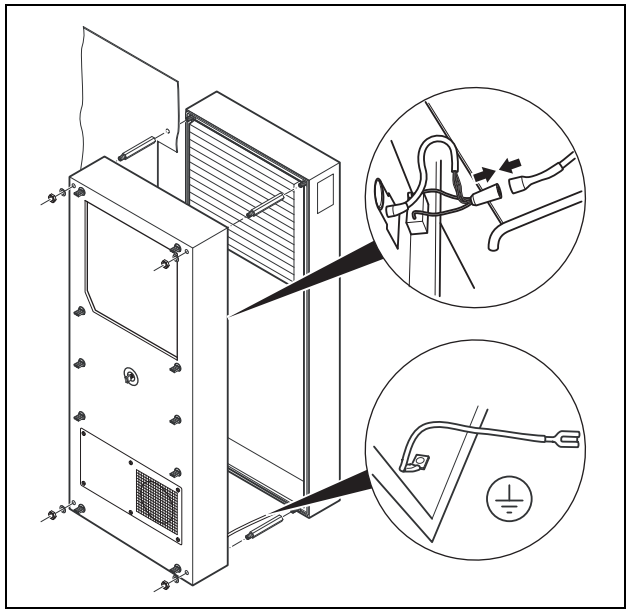

Fig. 13: Securing the cooling unit

- Connect the fan connector and PE conductor.
- Mount the front enclosure tray using the washers and nuts.

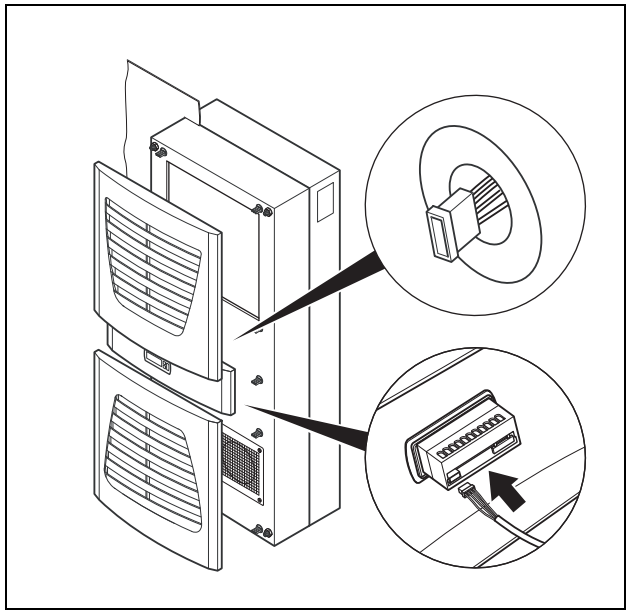

Fig. 14: Connecting the display connector

- Carefully connect the display connector.
- Push the louvred grille and, where applicable, the infill panel, onto the enclosure.

4.3.4 Full internal mounting of the cooling unit

- Carefully remove the louvred grille and the infill panel from the enclosure by pulling forwards.
- Carefully disconnect the connector from the rear of the display.

EN

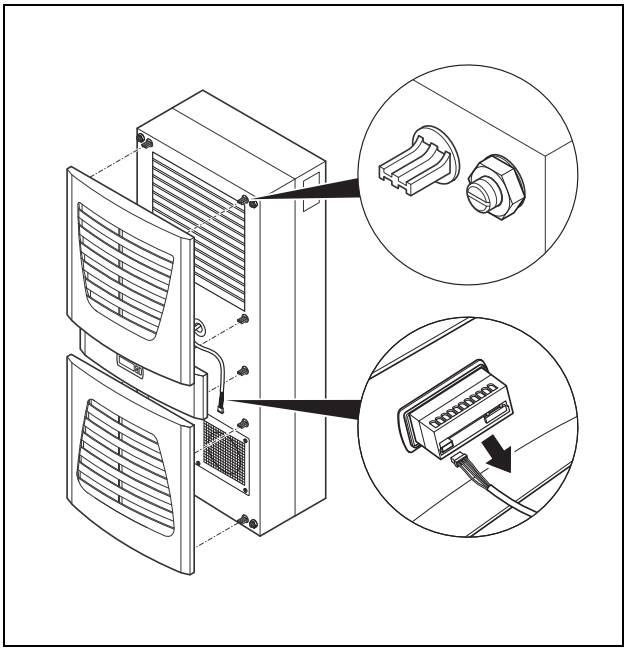

Fig. 15: Removing the louvred grille & disconnecting the display

- Cut the supplied sealing tape to the correct length and stick it carefully along the front enclosure half so that no gaps are left at the connection points.

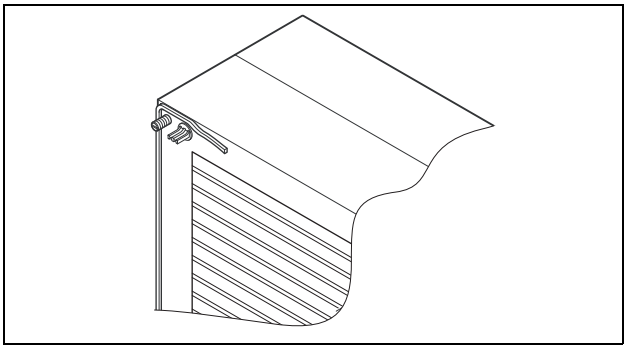

Fig. 16: Applying the self-adhesive tape

- Loosen the four nuts and washers from the front enclosure half.
- Push the unit into the mounting cut-out from the inside of the enclosure, and secure it to the enclosure from the outside using the washers and nuts.

Only for 3302.xxx:

Note:
The tightening torque for the nuts is 6 Nm.

- Before installing, remove the four screws as shown.

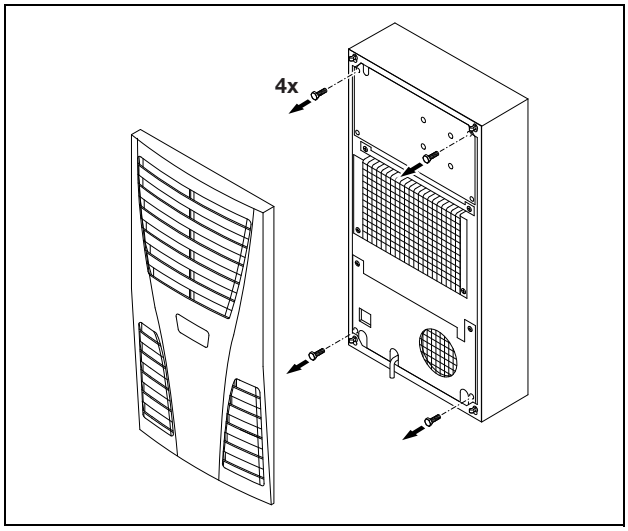

Fig. 17: 3302.xxx only: removing the four screws

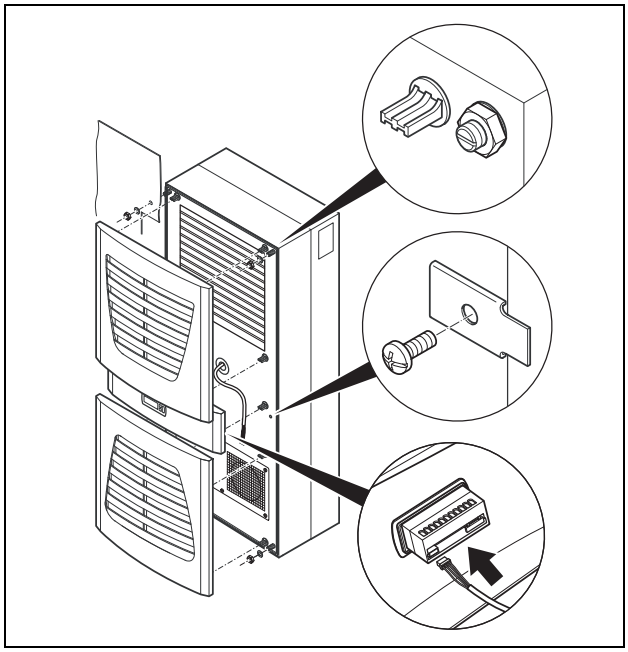

Fig. 18: Securing the cooling unit

- Where necessary, additionally secure the unit using the supplied mounting plates as shown in fig. 18.
- Carefully connect the display connector.
- Push the louvred grille and, where applicable, the infill panel, onto the enclosure.

4.4 Connecting the condensate discharge

A condensate discharge hose can be fitted to all types of cooling unit (except NEMA 4X devices).

The condensate discharge

– must be laid with a suitable and constant gradient (no siphoning)

– must be laid without kinks

– must not have a reduced cross-section if extended

The condensate hose is available as an accessory (refer also to Accessories in the Rittal Catalogue).

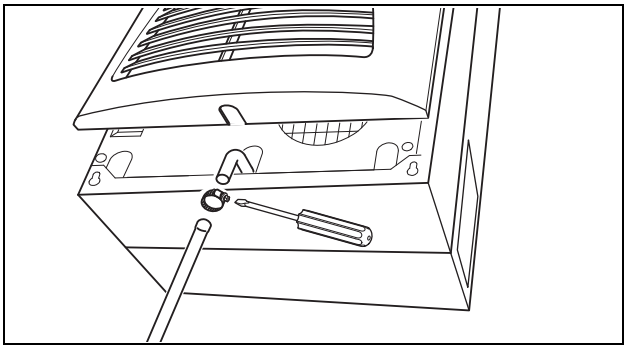

Fig. 19: Connecting the condensate discharge

- Connect a suitable hose to the condensate nozzle and secure using a hose clip.
- Route the condensate hose to a drain or into the external condensate evaporator (refer to Accessories in the Rittal Catalogue).

4.5 Notes on electrical installation

When performing the electrical installation, it is important to observe all valid national and regional regulations as well as the provisions of the responsible power supply company. The electrical installation may only be carried out by a qualified electrician who is responsible for compliance with the applicable standards and regulations.

4.5.1 Connection data

– The connected voltage and frequency must correspond to the values stated on the rating plate
– The cooling unit must be connected to the mains via an all-pin isolating device, which ensures at least 3 mm contact opening when switched off
– No additional temperature control may be connected upstream of the unit at the supply end
– Install the protective device specified on the rating plate to protect the line and equipment from short-circuits.
– The mains connection must ensure low-noise potential equalisation

4.5.2 Overvoltage protection and supply line load

– The unit does not have its own overvoltage protection. Measures must be taken by the operator at the supply end to ensure effective lightning and overvoltage protection. The mains voltage must not exceed a tolerance of ±10%.
– In accordance with IEC 61 000-3-11, the unit is intended solely for use at sites with a continuous current-carrying capacity (incoming mains power supply) of more than 100 A per phase and with a supply voltage of 400/230 V. If necessary, the electricity supply company must be consulted to ensure that the continuous current-carrying capacity at the point of connection to the public grid is sufficient for connection of such a unit.
– The fans and compressors in single- and three-phase units are intrinsically safe (thermal winding protection). This also applies to transformer versions, types 3304.510, 3305.510, 3328.510 and 3329.510, and to special-voltage units which are likewise equipped with a transformer.
– Install the protective device specified on the rating plate to protect the line and equipment from short-circuits (miniature circuit-breaker with appropriate characteristic – e.g. "K" characteristic – or gG standard type slow fuse, circuit-breaker for plant or transformer protection). Select a suitable circuit-breaker in accordance with the information specified on the rating plate: Set it to the minimum specified value. This will achieve the best short-circuit protection for cables and equipment. Example: Specified setting range 6.3 – 10 A; set to 6.3 A.

4.5.3 Three-phase devices

– The electrical connection for devices in the three-phase version MUST be made with a clockwise rotating field
– The three-phase version of models 3304.xxx, 3305.xxx, 3328.xxx, 3329.xxx and 3332.xxx must be connected to a TN network with star earthing via a circuit-breaker for plant protection (current setting as per the rating plate). Three-phase units with special voltages must be protected with a circuit-breaker for transformer protection (category AC-3) as per the rating plate.
– Units designed for three phase 400/460 V feature additional monitoring of the rotary field or the absence of a phase. If the rotary field is incorrect or a phase is absent, the unit will not run.

4.5.4 Door limit switch

– Each door limit switch must only be assigned to one cooling unit.
– Several door limit switches may be connected in parallel to one cooling unit.
– The minimum cross-section for the connection cable is 0.3 mm^2 for a cable length of 2 m.
– The line resistance to the door limit switch must not exceed a maximum of 50 Ω.
– The door limit switch only supports a floating connection; no external voltages.
– The contact of the door limit switch must be closed when the door is open.

The safety extra-low voltage for the door limit switch is provided by the internal power pack: Current approx. 30 mA DC.

- Connect the door limit switch to terminals 1 and 2 of the connector.

4.5.5 Notes on the flicker standard

The flicker limits specified in standard EN 61 000-3-3 or -3-11 are adhered to, provided the supply impedance is less than approx. 1.5 Ω.

Where necessary, the unit operator should measure the connected impedance or consult the responsible electricity supply company. If there is no way of influencing

EN

the supply impedance and sensitive installed components (e.g. BUS) are subjected to interference, a line reactor or starting-current limiting device should be connected upstream of the cooling unit to restrict the start-up current of the cooling unit.

4.5.6 Potential equalisation

If, for EMC reasons, the unit is to be integrated into the customer's existing potential equalisation system, a conductor with a larger nominal cross-section can be connected to the potential equalisation connection point (attachment points) on the wall-mounted cooling units. According to the standard, the PE conductor in the mains connection cable is not classified as an equipotential bonding conductor.

4.6 Making the electrical connection

4.6.1 Bus connection (only when interconnecting several units with a Comfort controller)

When using several cooling units, the serial device interface X2 can be used to connect up to ten cooling units with the bus cable (Model No. 3124.100).

Note:
The electrical signals at the X2 interface are of an extra-low voltage (not extra-low safety voltages in accordance with EN 60 335-1).

When interconnecting, please note the following:
- De-energise the cooling units to be connected
- Ensure proper electrical insulation
- Make sure the cables are not laid in parallel to power lines
- Make sure that the lines are short

Note:
With the last slave unit in the group, do not, under any circumstances, connect the remaining socket of the Y cable 3124.100 into interface X3 of the cooling unit!

4.6.2 Connection X3 for serial interface

The interface card (Model No. 3124.200) may be connected to X3. This is used to evaluate system messages in a PLC, for remotely setting parameters and monitoring, or for integration into the facility management system.

4.6.3 Mounting external transformer

Only for 3361.x40.

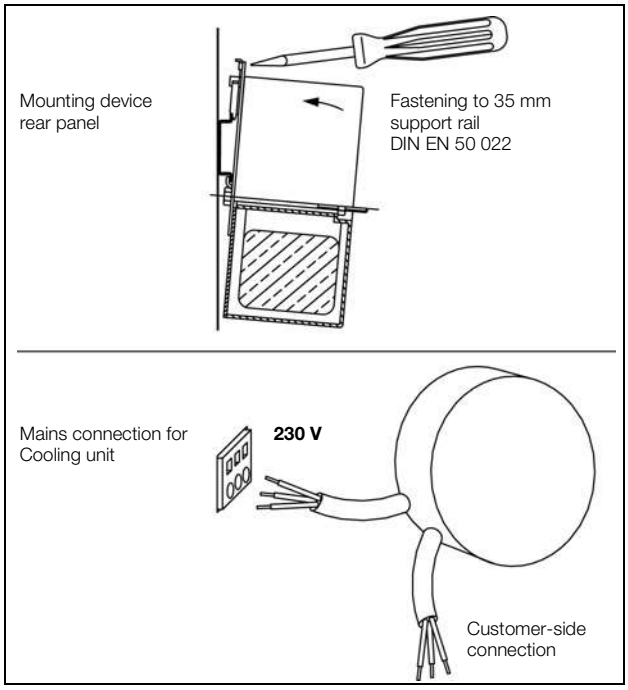

Fig. 20: Mounting external transformer (3361.x40 only)

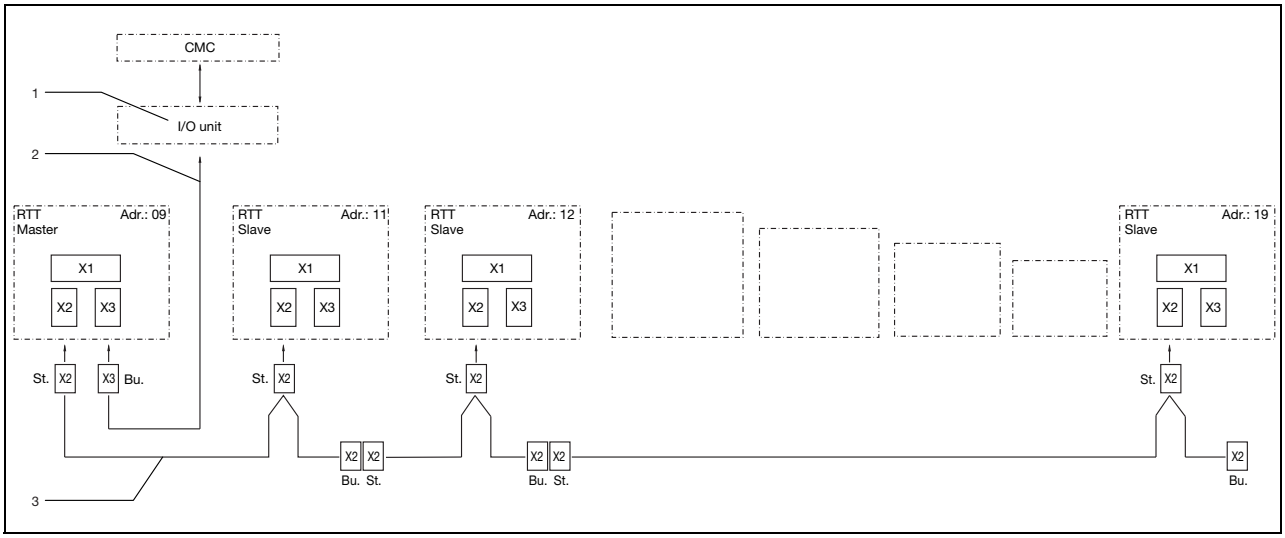

Fig. 21: Connection example: Master-slave operation

Key

1 Serial interface (Model No. 3124.200)
2 Serial interface cable
3 Master-slave bus cable (Model No. 3124.100)
RTT Rittal TopTherm cooling units
X1 Supply connection/door limit switch/alarms
X2 Master/slave connection Sub-D, 9-pole
X3 Serial interface Sub-D, 9-pole
St. Sub-D connector, 9-pole
Bu. Sub-D jack, 9-pole
Adr. Address

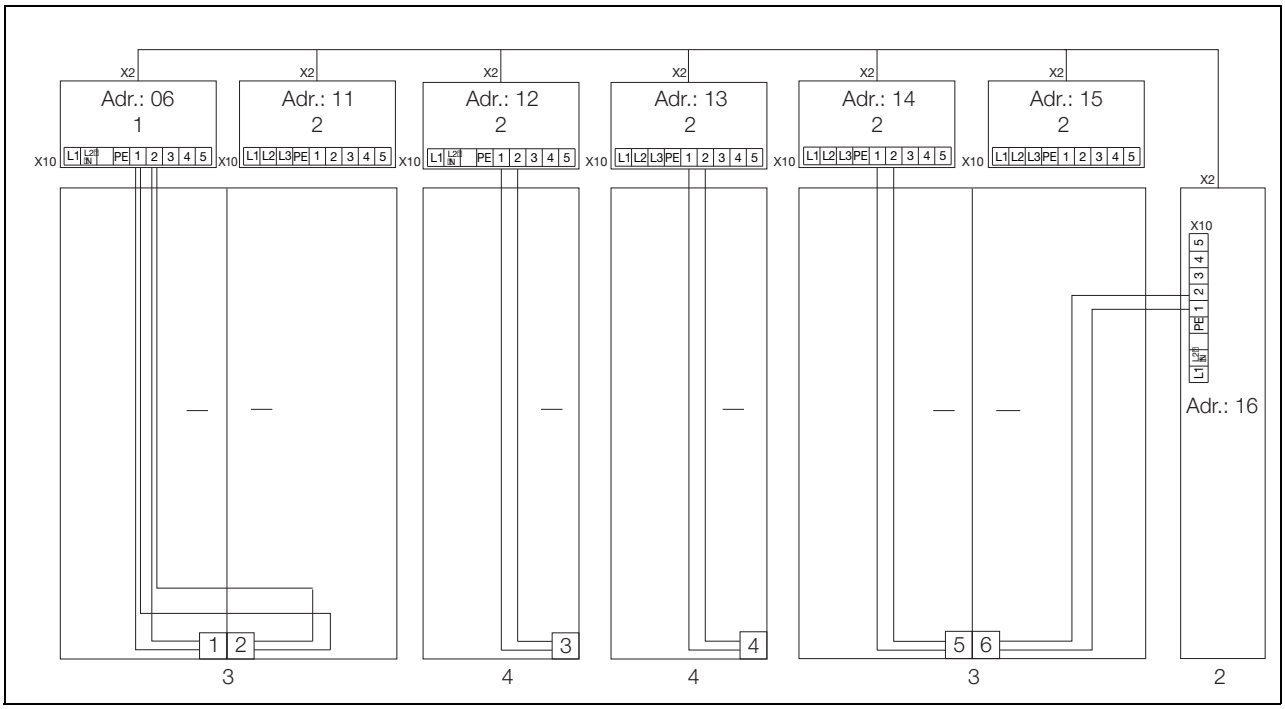

Fig. 22: Connection example: Door limit switch and master-slave operation

Key

1 Master cooling unit
2 Slave cooling units
3 2-door enclosure with two door limit switches
4 Enclosure with door limit switch

4.6.4 Installing the power supply

- Complete the electrical installation by following the wiring plan on the rear of the cooling unit (see fig. 2, for key see page 15).
- If you would like the system messages from the cooling unit to be evaluated via the system message relay, you should also connect a suitable low-voltage cable to terminals 3 – 5.

EN

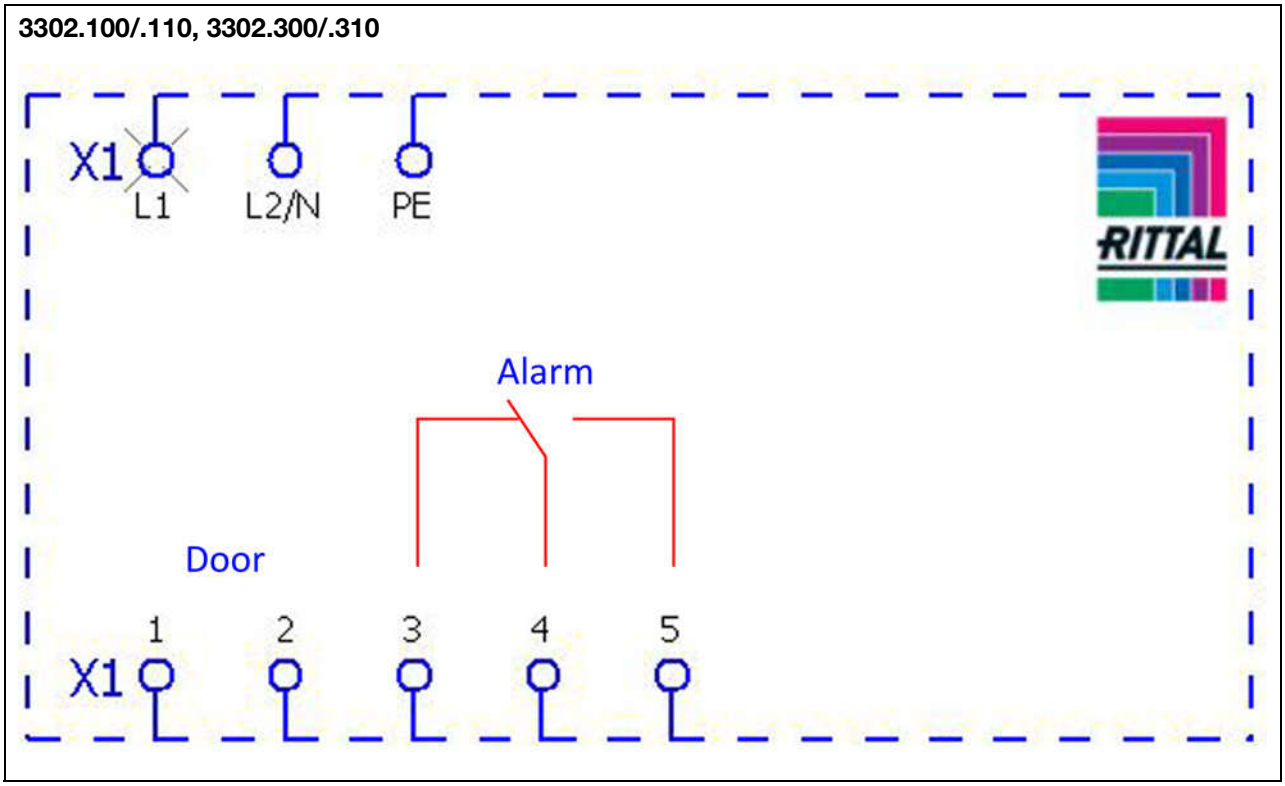

Fig. 23: Electrical wiring plan no. 1

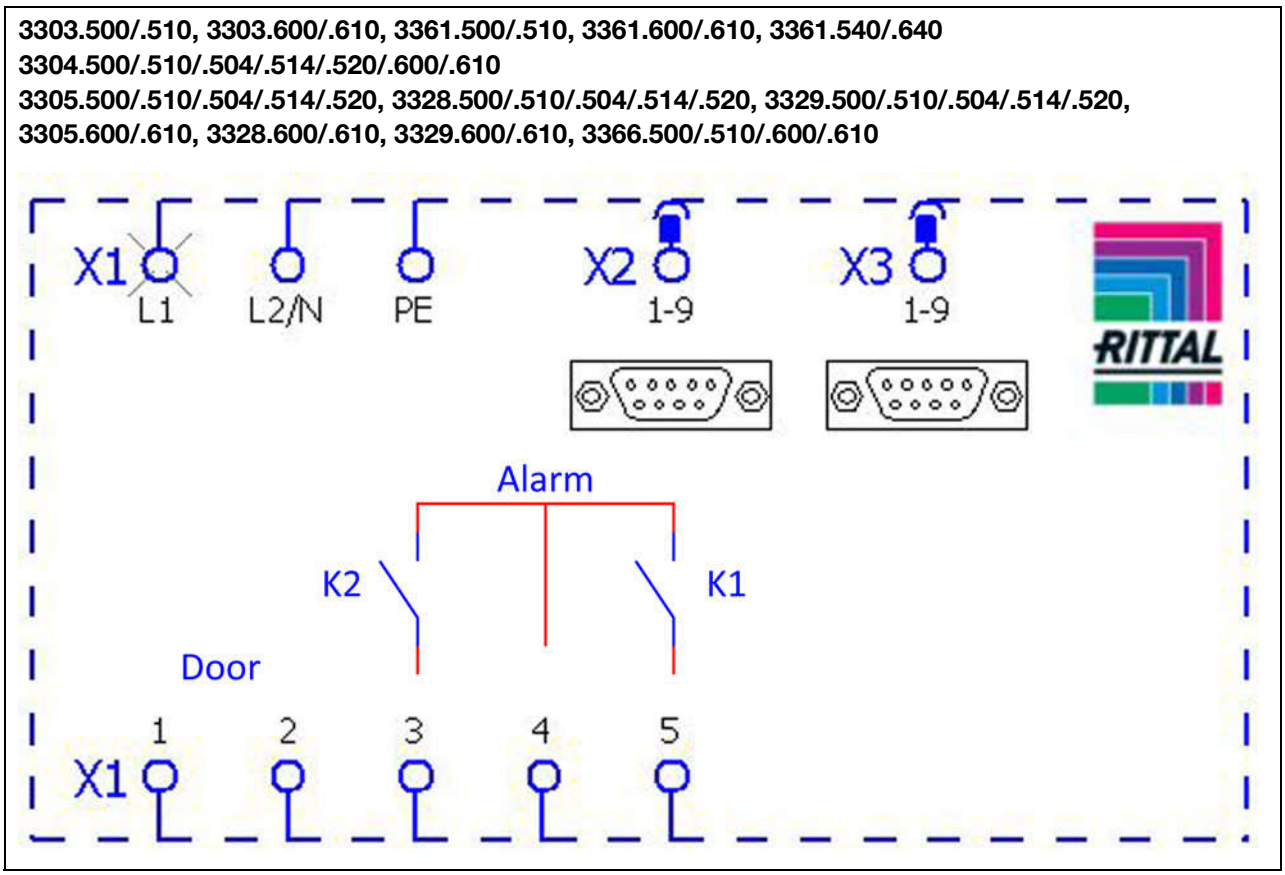

Fig. 24: Electrical wiring plan no. 2

3304.540/.544, 3305.540/.544, 3328.540/.544, 3329.540/.544
3304.640, 3305.640, 3328.640, 3329.640, 3366.540/.640, 3332.540/.640

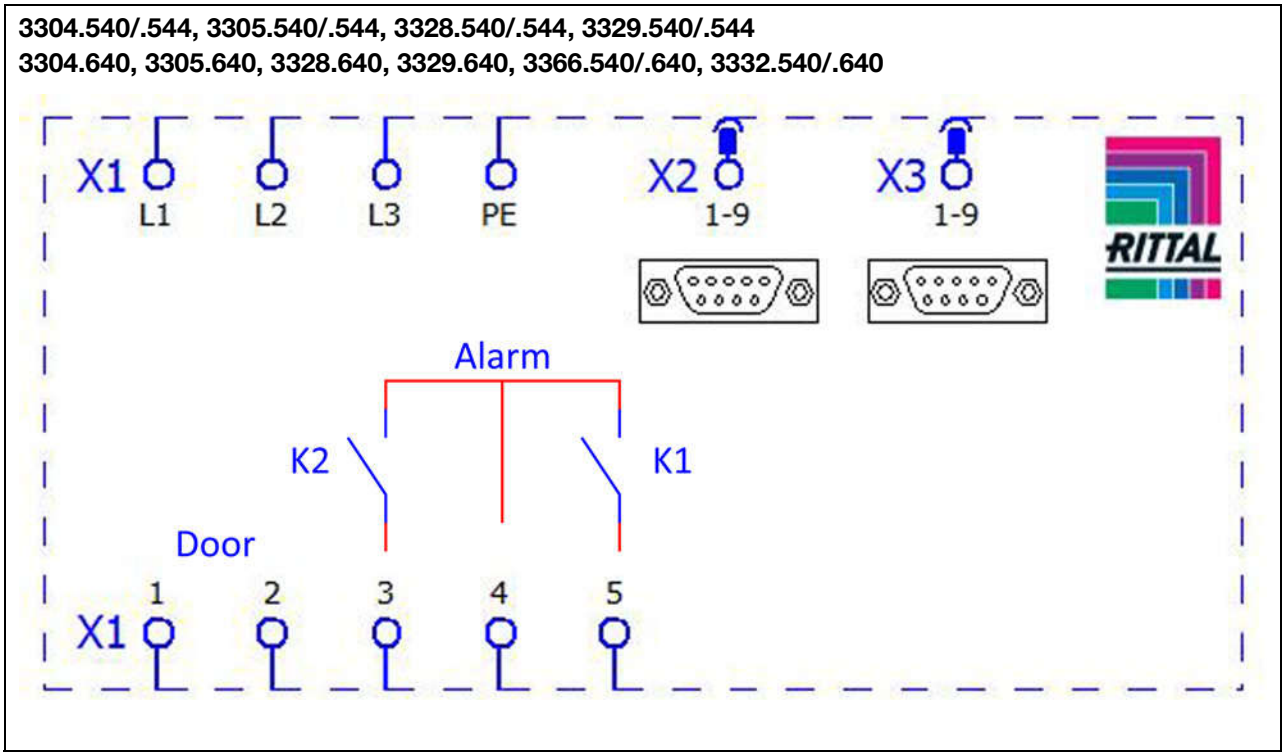

Fig. 25: Electrical wiring plan no. 3

Key

X1 Main terminal strip
X2 Master/slave connection
X3 Optional interface
K1 Relay collective fault 1
K2 Relay collective fault 2
Door Door limit switch (without door limit switch: terminal 1, 2 open)

Note:
For technical data, refer to the rating plate.

AC cos ϕ = 1	DC Res. Load
I max. = 2 A U max. = 250 V	I min. = 100 mA U max. = 30 V I max. = 2 A

Tab. 2: Relay contact data

4.7 Finalising assembly

4.7.1 Installing the filter media

The entire cooling unit condenser is covered with a dirt-repelling, easy-to-clean RiNano coating. In many applications, therefore, the use of filter media is unnecessary, particularly with dry dusts.

For dry, coarse dust and lint in the ambient air, we recommend installing an additional PU foam filter mat (available as an accessory) in the cooling unit. For air containing oil condensate, we recommend the use of metal filters (also available as an accessory). When used in textile plants with heavy lint contamination, lint screens should be used (available as an optional extra).

- Pull the louvred air inlet grille off the enclosure.
- Insert the filter mat into the louvred grille as shown in fig. 26 and push it back onto the enclosure.

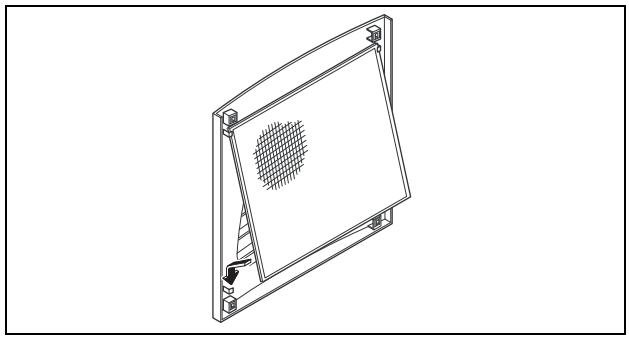

Fig. 26: Installing the filter mat

4.7.2 Fitting the cooling unit

For partial and full internal mounting only.

- Connect the connector to the rear of the display.
- Place the louvred grille onto the unit at the front, and press it down until you hear it snap into place.

EN

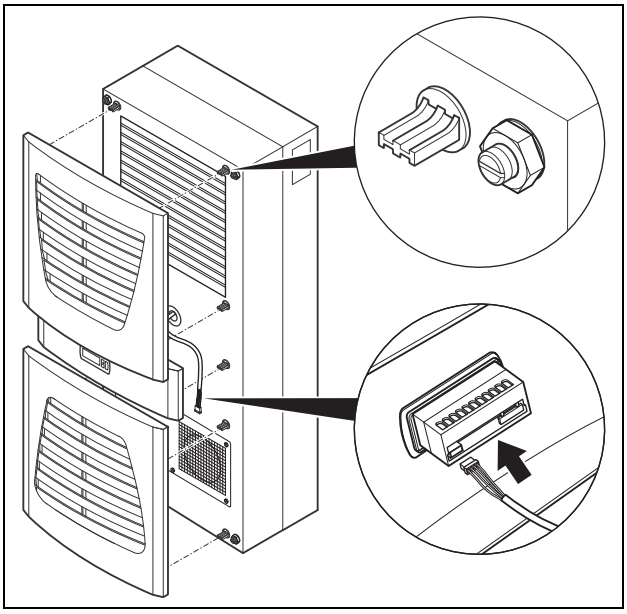

Fig. 27: Connect the display and attach the louvred grille

4.7.3 Setting the filter mat monitor (only with e-Comfort controller)

Function of the filter mat monitor:

Dirt on the filter mat is automatically detected by measuring the temperature difference in the external circuit of the cooling unit (see section 6.2.6 "Programming overview"). As the level of filter mat soiling increases, the temperature difference will increase. The setpoint value of the temperature difference in the external circuit adapts automatically to the relevant operating points in the performance diagrams. Hence there is no need to readjust the setpoint value for different unit operating points.

5 Start-up

Note:
The oil must be collected in the compressor in order to ensure effective lubrication and cooling.
Do not operate the cooling unit for at least 30 minutes after assembling the equipment.

■ Once all the assembly and installation work is complete, switch on the power supply to the cooling unit.

The cooling unit starts running:

– With Basic controller: The green operating LED ("line") is illuminated.
– With e-Comfort controller: The software version of the controller first appears for approx. 2 seconds, then "ECO" to show Eco mode is enabled. The internal enclosure temperature will then appear in the 7-segment display

You can now make your individual settings on the unit, e.g. set the temperature or (with e-Comfort controller only) assign the network identifier, etc. (refer to section 6 "Operation").

6 Operation

You can operate the cooling unit using the controller on the front of the device (fig. 2, item 11). Depending on the model, the unit is equipped with a Basic or e-Comfort controller.

6.1 Control using the Basic controller

For Model Nos. 3302.xxx.

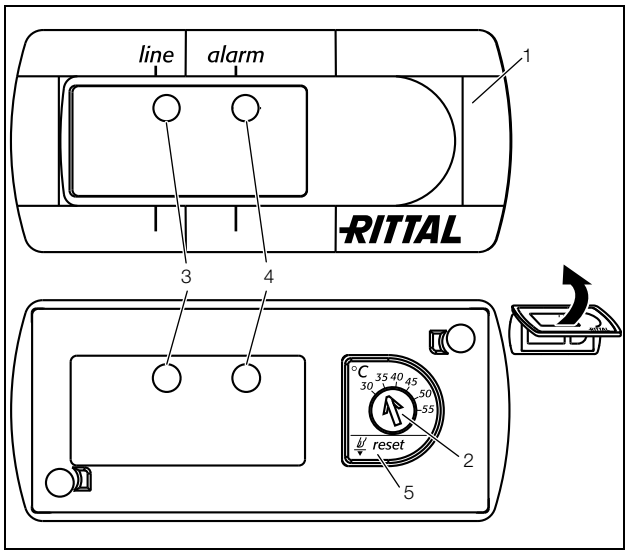

Fig. 28: Basic controller

Key

1 Controller trim panel
2 Temperature setter
3 LED green ("line")
4 LED red ("alarm")
5 Reset button

6.1.1 Properties

– Rated operating voltage: 115 V or 230 V
– Integral start-up delay and door limit switch function
– Protective function to prevent icing
– Monitoring of all motors (compressor, condenser fan, evaporator fan)
– Phase monitoring for three-phase units
– Visualisation of the operating status via LED display:
  – Voltage on, unit operational
  – Door open (only if door limit switch installed)
  – Warning of overtemperature
  – High-pressure monitor has switched
– Switching hysteresis: 5 K
  If the cooling unit and compressor run times are too long < 1 minute, the switching hysteresis to protect the cooling unit is automatically increased.
– Floating system message contact in case of overtemperature

– Temperature setting
  (setting range 30 – 55°C) via potentiometer
– Test function
– Flashing mode to indicate system messages.
  See section 6.1.2 "Operating and error display"

The cooling unit operates automatically, i.e. after switching on the power supply, the evaporator fan (see fig. 3) will run continuously and permanently circulate the internal enclosure air. The built-in Basic controller ensures automatic normal shut-down operation of the cooling unit by the value of the fixed preset switching difference of 5 K.

6.1.2 Operating and error display

The Basic controller monitors and controls the cooling unit. It indicates the operating and error status via the green and red LEDs (fig. 28, items 3 and 4):

LED	Status	Cause		Solution
Green (line)	Illuminated	Power supply on, unit operational		–
	Flashing	Only with door limit switch installed: enclosure door open		In order to avoid condensation, close the enclosure door as quickly as possible.
		Only with door limit switch installed: enclosure door closed		Check the position of the door limit switch.
Red (alarm)	Alarm/error/warning		Number of flash intervals for the red LED	Flash interval
	Implement a reset	Device reset	(12)	|_|_|_|_|_|_|_|_|_|_|_|_|*****|_|_|_|_|_|_|_|_|_|_|_|
		High pressure alarm	(0)	|_|_|_|_|_|_|_|_|_|_|_|_|_|_|_|_|_|_|_|_|_|_|_|_|_|
	Sensors	Potentiometer defective or display error	(3)	|_|_|*****|_|_|*****|_|_|*****|_|_|*****|_|_|*****
		Internal temperature sensor defective	(4)	|_|_|_|*****|_|_|_|*****|_|_|_|*****|_|_|_|*****
		Anti-icing sensor defective	(5)	|_|_|_|_|*****|_|_|_|_|*****|_|_|_|_|*****|_|_|_|_|
	Overload	Compressor overloaded	(6)	|_|_|_|_|_|*****|_|_|_|_|_|*****|_|_|_|_|_|*****
		Interior fan overloaded	(7)	|_|_|_|_|_|_|*****|_|_|_|_|_|_|*****|_|_|_|_|_|_|
		Exterior fan overloaded	(8)	|_|_|_|_|_|_|_|*****|_|_|_|_|_|_|_|*****
	Device status/state	Overload mode (heat loss)	(9)	|_|_|_|_|_|_|_|_|_|*****|_|_|_|_|_|_|_|_|*****
	Warning	Anti-icing alarm	(2)	|_|*****|_|*****|_|*****|_|*****|_|*****|_|*****|_|
		Overtemperature warning	(1)	|*****|*****|*****|*****|*****|*****|*****|*****|*****|
Off	No display	No power	–	Check power supply
		Rotary current phase monitoring: "LED off" = Incorrect phase connection	–	Swap phases

Tab. 3: Operating and error display on the Basic controller

Key to flash intervals

|	=	500 ms (red LED on)
_	=	500 ms (red LED off)
*****	=	3 s pause (red LED off)

The overtemperature message may also be polled via an integral floating contact on the cooling unit terminal (system message relay with changeover contact, see connection diagrams under section 4.6.4 "Installing the power supply"):
– Terminal 3: NC (normally closed)
– Terminal 4: C (connection of the supply voltage to the fault signal relay)
– Terminal 5: NO (normally open)

The NC and NO definitions refer to the de-energised state. As soon as power is applied to the cooling unit,

the system message relay picks up, so that the relay contacts change status (contact 3 – 4 open; contact 4 – 5 closed).

This is the normal operating state of the cooling unit. As soon as an error message occurs or the power supply is interrupted, the relay drops out and contact 3 – 4 is closed.

6.1.3 Test mode with the Basic controller

The Basic controller is equipped with a test function whereby the cooling unit commences cooling operation independently of the set temperature or door limit switch function.

First you must remove the controller trim panel.

- Switch off the mains voltage.
- Remove the louvred grille or infill panel in which the controller is installed.
- Release the display lock from behind and pull it forwards slightly.

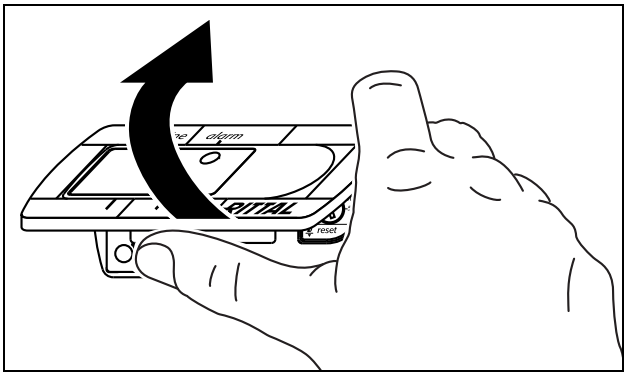

Fig. 29: Releasing the Basic controller trim panel

- Carefully lift the trim panel, e.g. using your thumb or a flat screwdriver, and remove it.

You can now start test mode.

- Rotate the potentiometer to the left-hand stop, then hold the rubberised potentiometer display down while you re-connect the mains voltage.

The cooling unit will commence operation and the green LED will flash (I_II_I_II_ . . .). Test mode is completed after approximately 5 minutes. The unit switches off and changes to normal operation.

Key

I = LED 500 ms on
_ = LED 500 ms off

In normal operation, the green LED is permanently illuminated.

- Next, rotate the potentiometer back to the required setpoint.

6.1.4 Setting the temperature

Note:
With the Basic controller, the temperature is preset at the factory to +35°C.
In order to save energy, do not set the temperature lower than that actually necessary.

To change the temperature setting:

- Take the trim panel off the controller as described in section 6.1.3 "Test mode with the Basic controller".
- Set the required temperature on the temperature setting device (fig. 28).
- Carefully push the trim panel onto the display until you hear it snap into place.
- Push the display back into the infill panel or louvred grille.
- Re-attach the louvred grille or infill panel to the cooling unit.

6.1.5 Resetting the Basic controller

Following a high-pressure alarm in the cooling cycle, and once the cause has been rectified, you will need to manually reset the Basic controller:

- Take the trim panel off the Basic controller as described in section 6.1.3 "Test mode with the Basic controller".
- Press the reset button (fig. 28, item 5) for at least 3 seconds.

The red LED is extinguished.

- Re-install the Basic controller.

6.2 Control using the e-Comfort controller

For unit types 33xx.5xx and 33xx.6xx.

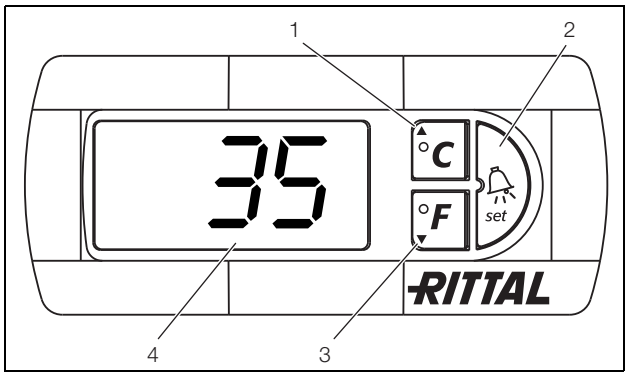

Fig. 30: e-Comfort controller

Key

1 Programming button, also display of the set temperature unit (degrees Celsius)
2 Set button
3 Programming button, also display of the set temperature unit (degrees Fahrenheit)
4 7-segment display

6.2.1 Properties

- Rated operating voltage:
  - 115 V or
  - 230 V or
  - 400/460 V, 3-phase, supports multiple voltages without rewiring
- Integral start-up delay and door limit switch function
- Protective function to prevent icing
- Monitoring of all motors (compressor, condenser fan, evaporator fan)
- Phase monitoring for three-phase units
- Master-slave function with a maximum of ten units. One device functions as a master unit. Once the set temperature is reached by one of the connected slave devices or in the event of the door limit switch function, the affected slave unit will report to the master unit that switches all the other cooling units on or off as required.
- Switching hysteresis: adjustable from 2 – 10 K, preset to 5 K
- Visualisation of the current internal enclosure temperature and all error messages in the 7-segment display
- Using an interface card (Model No. 3124.200), the unit may be incorporated into higher-level remote monitoring systems.

The cooling unit operates automatically, i.e. after switching on the power supply, the evaporator fan (see fig. 3) will run and circulate the internal enclosure air. The compressor and condenser fan are regulated by the e-Comfort controller. The e-Comfort controller has a 7-segment display (fig. 30, item 4). After switching on the power supply, the current software version initially appears on this display for approx. 2 seconds together with the symbol to show Eco mode is enabled, followed by a preset option (e.g. t10) or the temperature.

In regular operation, the display shows both the temperature (in degrees Celsius or Fahrenheit – users may switch between the two) and any error messages.

The current internal enclosure temperature is usually displayed permanently. In the event of an error message, this alternates with the temperature display.

The unit is programmed using buttons 1 – 3 (fig. 30). The relevant parameters also appear in the display.

6.2.2 Eco mode

All Rittal TopTherm cooling units with e-Comfort controller from firmware 3.2 have the energy-saving eco mode, which is enabled in the delivered state.

The eco mode is used to save energy in the heat exchanger if there is no thermal load, or there is a low thermal load in the enclosure (e. g. standby operation, no production or weekend). During this process the evaporator fan in the internal circuit is switched off as appropriate if the actual internal enclosure temperature drops to 10 K below the specified setpoint temperature. To ensure the internal temperature is reliably measured during this process, the fan starts cyclically for 30 sec. every 10 minutes (see fig. 31). If the internal temperature drops to a range 5 K below the setpoint set again, the fan switches back to continuous operation.

If required, eco mode can be disabled on the control display. For this purpose switch the parameter from 1 to 0 in the programming level (see tab. 4). The fan then runs continuously.

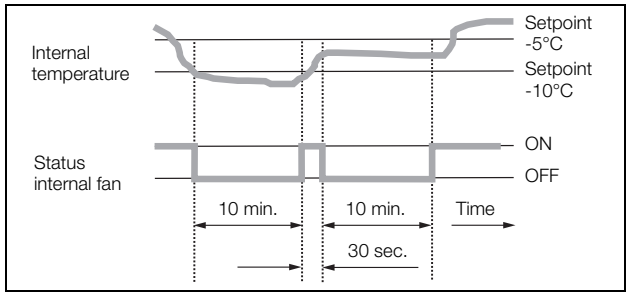

Fig. 31: Eco mode

6.2.3 Launching test mode

The e-Comfort controller is equipped with a test function whereby the cooling unit commences cooling operation independently of the set temperature or door limit switch function.

- Simultaneously press buttons 1 and 2 (fig. 30) for at least 5 sec.

The cooling unit will commence operation. Test mode is completed after approximately 5 minutes. The unit switches off and changes to normal operation.

EN

6.2.4 General information about programming

Using buttons 1, 2 and 3 (fig. 30) you can change 24 parameters within the preset ranges (min. value, max. value).

Tables 4 and 5 show the parameters which can be altered. fig. 32 on page 22 shows which buttons must be pressed.

Note on switching hysteresis:
With a low hysteresis and short switching cycles, there is a risk that cooling may not be adequate or that only partial sections of the enclosure are cooled. If the cooling unit and compressor run times are too long < 1 minute, the switching hysteresis to protect the cooling unit is automatically increased (see message "LH" in section 6.2.9 "Evaluating system messages").

Note on temperature settings:
With the e-Comfort controller, the temperature is preset at the factory to +35°C.
In order to save energy, and due to the risk of increased condensation, do not set the temperature lower than that actually necessary.

Note on useful cooling power:
Interactive performance diagrams for calculating the useful cooling power may be found at www.rittal.com.

In principle, the programming is identical for all editable parameters.

To enter programming mode:

- Press button 2 ("Set") for approx. 5 seconds.

The controller is now in programming mode. While in programming mode, if you do not press any buttons for approx. 30 seconds, the display will first flash, then the controller will switch back to normal display mode. "Esc" in the display indicates that any changes made have not been saved.

- Press the programming buttons ▲ (°C) or ▼ (°F) to switch between the editable parameters (see tables 4 and 5).
- Press button 2 ("Set") to select the displayed parameter for editing.

The current value of this parameter is displayed.

- Press one of the programming buttons ▲ (°C) or ▼ (°F).

"Cod" will appear in the display. In order to be able to change a value, you must enter the authorisation code "22".

- Keep the ▲ programming button (°C) held down until "22" appears.
- Press button 2 ("Set") to confirm the code.

You can now alter the parameter within the preset limits.

- Press one of the programming buttons ▲ (°C) or ▼ (°F) until the required value appears.
- Press button 2 ("Set") to confirm the change.

You can now alter other parameters in the same way. There is no need to re-enter the authorisation code "22".

- To exit programming mode, press button 2 ("Set") again for approximately 5 seconds.

"Acc" will appear in the display to indicate that the changes have been saved. The display then switches back to regular operation (internal enclosure temperature).

You can also program the e-Comfort controller using a diagnosis software package (Model No. 3159.100), which is supplied with a connection cable to the PC. The cable connector on the rear of the e-Comfort controller display serves as an interface.

6.2.5 Editable parameters

See also fig. 32 on page 32.

Progr. level	Display screen	Parameter	Min. value	Max. value	Factory setting	Description
1	St	Internal enclosure temperature set-point T_i	20°C	55°C	35°C	The internal enclosure temperature setting is preset at the factory to 35°C (95°F) and may be altered within a range of 20 – 55°C (68 – 131°F).
			68°F	131°F	95°F	
2	Fi	Filter mat monitoring	10°C	60°C	99 (= off)	To enable filter mat monitoring, the display should be set to a minimum of 10 K (18°F) above the temperature difference shown in programming mode "Fi"; filter mat monitoring is disabled at the factory (99 = off).
			18°F	108°F	178 (= off)	
3	Ad	Master-slave identifier	0	19	0	See section 6.2.8 "Setting the master/slave identifier".
4	CF	Switch between °C/°F	0	1	0	The temperature display can be switched between °C (0) and °F (1). The LED displays the current unit of temperature.
5	H1	Setting for switching difference (hysteresis)	2 K	10 K	5 K	The cooling unit is preset in the factory to a switching hysteresis of 5 K (9°F). This parameter should only be changed in consultation with us. Please contact us for advice.
			4°F	18°F	9°F	
6	H2	Differential for error message A2	3 K	15 K	5 K	If the internal enclosure temperature exceeds the set value by more than 5 K (9°F), then error message A2 (internal enclosure temperature too high) appears on the display terminal. If necessary, the differential may be altered here within the range of 3 – 15 K (5 – 27°F).
			5°F	27°F	9°F	
26	ECO	Eco-mode operation	0	1	1	Eco mode OFF: 0 / Eco mode ON: 1
27	PSO	Changing the authorisation code	0	15	0	This parameter allows you to change the "22" authorisation code (factory setting). The new code results from the sum of 22 + PSO.

Tab. 4: Editable parameters

EN

6.2.6 Programming overview

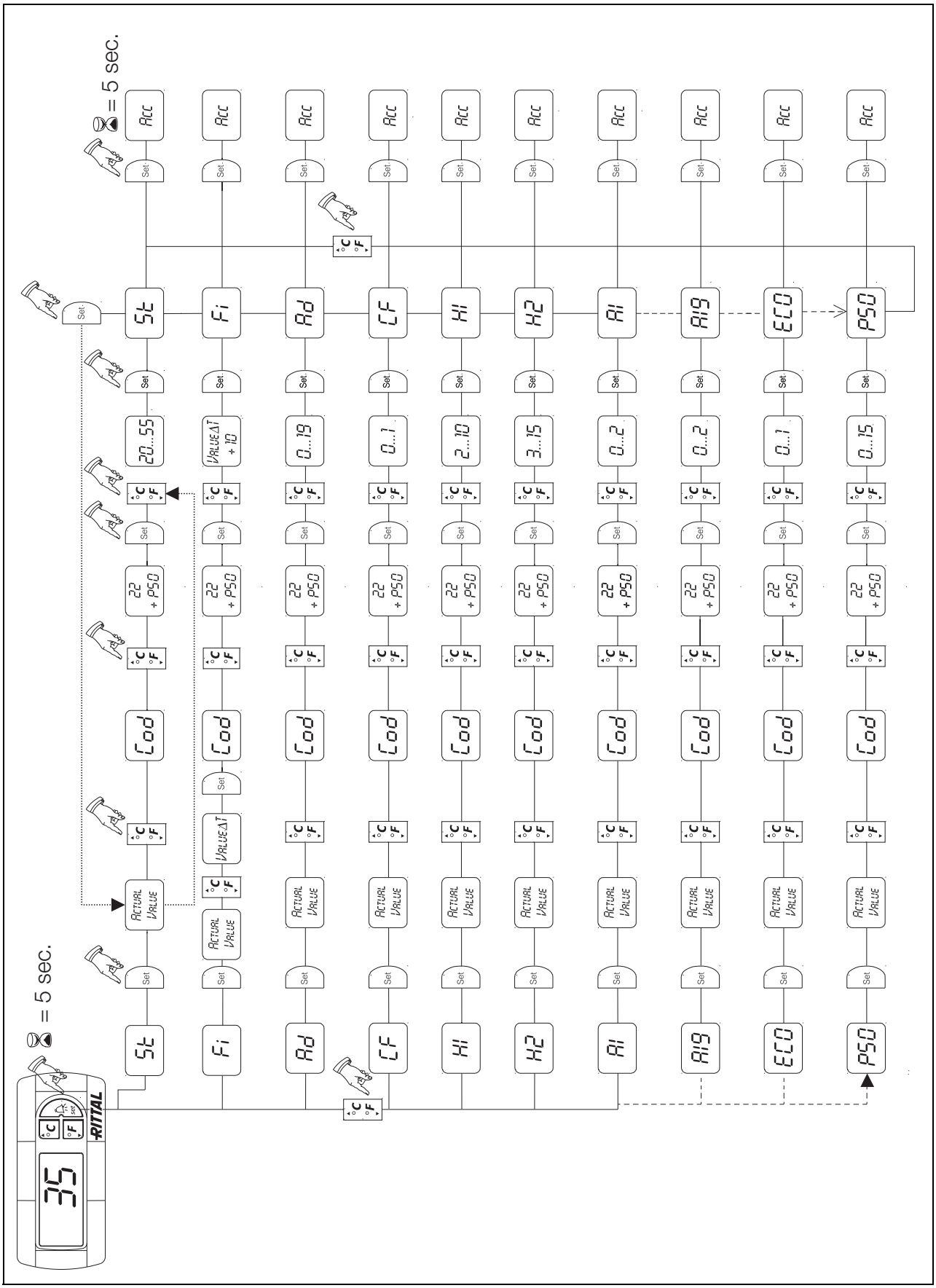

Fig. 32: Programming overview

6.2.7 Defining system messages for evaluation

System messages are shown on the display screen of the e-Comfort controller via the displays A1 to A20 and E0.

A more detailed explanation of the system messages may be found in section 6.2.9 "Evaluating system messages".
See also fig. 32 on page 22.

Progr. level	Display screen	Min. value	Max. value	Factory setting	Type or location of fault
7	A1	0	2	0	Enclosure door open
8	A2	0	2	0	Internal temperature of enclosure too high
9	A3	0	2	0	Filter monitoring
10	A4	0	2	0	Ambient temperature too high/low
11	A5	0	2	0	Icing hazard
12	A6	0	2	1	PSA^H pressure switch
13	A7	0	2	2	Evaporator coil
14	A8	0	2	1	Condensate warning
15	A9	0	2	1	Condenser fan blocked or defective
16	A10	0	2	1	Evaporator fan blocked or defective
17	A11	0	2	2	Compressor
18	A12	0	2	1	Condenser
19	A13	0	2	1	Ambient temperature sensor
20	A14	0	2	1	Icing temperature sensor
21	A15	0	2	1	Condensate warning temperature sensor
22	A16	0	2	1	Internal temperature sensor
23	A17	0	2	1	Phase monitoring
24	A18	0	2	0	EPROM
25	A19	0	2	0	LAN/Master-Slave

Tab. 5: System messages that can be evaluated via relays

The system messages A1 – A19 may also be evaluated via two floating system message relays. In this way, one of the two system message relays may be allocated to each system message.
System message relays with normally open contact, see wiring diagrams in section 4.6.4 "Installing the power supply":
– Terminal 3: NO (normally open, relay 2)
– Terminal 4: C (connection of the supply voltage to the system message relay)
– Terminal 5: NO (normally open, relay 1)

The definition NO refers to the de-energised state. As soon as power is applied to the cooling unit, both system message relays (relay 1 and 2) energise.
This is the normal operating state of the cooling unit. As soon as a system message occurs or the power supply is interrupted, the corresponding relay will drop out and open the contact.

The RiDiag II software (available as an accessory, Model No. 3159.100) allows you to invert the system message relay circuit.
In the normal operating state the two relays will then drop out. If a system message occurs, the relevant relay will energise and the contact will close.



Note:
This setting can only be made using the RiDiag II software.

Program system messages with the value
0: System message is not sent to the system message relay, but merely appears in the display
1: System message is evaluated by relay 1
2: System message is evaluated by relay 2

EN

6.2.8 Setting the master/slave identifier

When several cooling units are connected together (maximum ten), one of the cooling units must be defined as the "master" and the others as "slaves". For this purpose, assign a corresponding identifier (address) to each cooling unit which will enable the cooling unit to be identified in the network.

If one of the slave units reaches the set temperature or if the door limit switch function is activated, the affected slave unit will report to the master unit, which then deactivates all the other cooling units.

Notes:
- Only one unit may be configured as master, and its identifier must match the number of connected slave units.
- The slave units must have different identifiers.
- The identifiers must be numbered in ascending order without any gaps.

On the **master cooling unit** (00 = factory setting), set the number of slave units present in the network:
- 01: Master with 1 slave cooling unit
- 02: Master with 2 slave cooling units
- 03: Master with 3 slave cooling units
- 04: Master with 4 slave cooling units
- 05: Master with 5 slave cooling units
- 06: Master with 6 slave cooling units
- 07: Master with 7 slave cooling units
- 08: Master with 8 slave cooling units
- 09: Master with 9 slave cooling units

On the **slave cooling unit** (00 = factory setting), set its own address:
- 11: Slave cooling unit no. 1
- 12: Slave cooling unit no. 2
- 13: Slave cooling unit no. 3
- 14: Slave cooling unit no. 4
- 15: Slave cooling unit no. 5
- 16: Slave cooling unit no. 6
- 17: Slave cooling unit no. 7
- 18: Slave cooling unit no. 8
- 19: Slave cooling unit no. 9

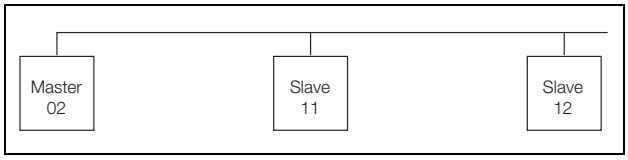

Fig. 33: Master/slave connection (example)

For further connection examples, see section 4.6.1 "Bus connection (only when interconnecting several units with a Comfort controller)".

For details of how to set the identifier, see section 6.2.5 "Editable parameters" or section 6.2.6 "Programming overview", parameter "Ad".

6.2.9 Evaluating system messages

In the e-Comfort controller, system messages are indicated by a number in the display.

Following the appearance of messages A03, A06 and A07 and after rectifying their cause, you will need to reset the e-Comfort controller (see section 6.2.10 "Reset the e-Comfort controller").

Display screen	System message	Possible cause	Measures to rectify the fault
A01	Enclosure door open	Door open or door limit switch incorrectly positioned	Close door, position door limit switch correctly, check connection if necessary
A02	Internal temperature of enclosure too high	Cooling capacity inadequate/unit undersized Error as a consequence of messages A03 to A17.	Check cooling capacity
A03	Filter monitoring	Filter mat soiled	Clean or replace; reset the e-Comfort controller
A04	Ambient temperature too high/low	Ambient temperature outside permissible operating range (+10°C to +60°C)	Raise or lower the ambient temperature (e.g. heat or ventilate the room)
A05	Icing hazard	Operational display in case of icing hazard. Evaporator coil fan may be mechanically blocked, defective, or cold air outlet obstructed.	Set the enclosure interior temperature to a higher value. Check the evaporator fan; release or exchange if necessary.

Tab. 6: Troubleshooting with the e-Comfort controller

Display screen	System message	Possible cause	Measures to rectify the fault
A06	PSA^H pressure switch	Ambient temperature too high	Lower the ambient temperature; reset the e-Comfort controller
		Condenser soiled	Clean the condenser; reset the e-Comfort controller
		Filter mat soiled	Clean or replace; reset the e-Comfort controller
		Condenser fan defective	Replace; reset the e-Comfort controller
		E-valve defective	Repair by refrigeration engineer; reset the e-Comfort controller
		PSA^H pressure switch defective	Refrigeration engineer to exchange reset the e-Comfort controller
A07	Evaporator coil	Lack of refrigerant; sensor in front of or behind condenser defective	Repair by refrigeration engineer; reset the e-Comfort controller
A08	Condensate warning	Condensate discharge kinked or blocked	Check condensate drainage; correct any kinks or blockages in the hose
		Only for units with optional condensate evaporation	Check the evaporation unit, replace if necessary
A09	Condenser fan	Blocked or defective	Clear the blockage; replace if necessary
A10	Evaporator fan	Blocked or defective	Clear the blockage; replace if necessary
A11	Compressor	Compressor overloaded (internal winding protection)	No action required; Unit switches on again independently
		Defective (check by measuring the winding resistance)	Replace by a refrigeration engineer
A12	Condenser temperature sensor	Open or short-circuit	Replace
A13	Ambient temperature sensor	Open or short-circuit	Replace
A14	Icing temperature sensor	Open or short-circuit	Replace
A15	Condensate warning temperature sensor	Open or short-circuit	Replace
A16	Internal temperature sensor	Open or short-circuit	Replace
A17	Phase monitoring	For three-phase devices only: Incorrect rotary field/phase absent	Swap two phases
A18	EPROM error	New board installed incorrectly	Software update needed (only following board installation with more recent software): Enter the programming level with Code 22; press button 1 and confirm with "Set" until "Acc" appears. Next, disconnect the unit from the mains and reconnect.
A19	LAN/Master-Slave	Master and slave not connected	Check setting and/or cable

Tab. 6: Troubleshooting with the e-Comfort controller

Display screen	System message	Possible cause	Measures to rectify the fault
A20	Voltage drop	Error display not shown	Event is stored in the log file
E0	Display message	Connection problem between the display and the controller board	Reset: Switch power supply off, then switch on again after approx. 2 sec.
		Cable defective; connection loose	Replace the boards
OL	Overload	Ambient parameters or heat loss outside the applicable limits	
LH	Low Heat	Minimal heat loss in enclosure.	
b07	Leak in the cooling circuit	Sensor B3 and B4 swapped over	Swap the sensors
rSt	Reset	Manual device reset required, see section 6.2.10 "Reset the e-Comfort controller".	

Tab. 6: Troubleshooting with the e-Comfort controller

6.2.10 Reset the e-Comfort controller

After the occurrence of faults A03, A06 and A07, you will need to reset the e-Comfort controller.

- Press buttons 1 (▲) and 3 (▼) (fig. 30) simultaneously for 5 seconds.

The system messages disappear and the temperature display is shown.

7 Inspection and maintenance

Warning!
The unit is live.
Switch off the power supply before opening, and take suitable precautions against it being accidentally switched back on.

Caution!
Any essential repair work on the cooling circuit must only be undertaken by a qualified refrigeration specialist.

The cooling circuit is designed in the form of a maintenance-free, hermetically sealed system. The cooling unit is filled with the required quantity of refrigerant at the factory, checked for leaks, and subjected to a functional test run.

The installed maintenance-free fans are mounted on ball bearings, protected against moisture and dust, and fitted with a temperature monitor. The life expectancy is at least 30,000 operating hours (L10, 40°C). The cooling unit is thus largely maintenance-free. All that may be required from time to time is to clean the components of the external air circuit using a vacuum cleaner or compressed air if they become visibly dirty. Any stubborn, oily stains may be removed using a non-flammable detergent, such as degreaser.

Maintenance interval: 2,000 operating hours. Depending on the level of contamination in the ambient air, the maintenance interval may be reduced to suit the air pollution intensity.

Caution!
Risk of fire!
Never use flammable liquids for cleaning.

Sequence of maintenance measures:
– Check the level of dirt.
– Filter soiling? Replace the filter if necessary.
– Cooling membranes soiled? Clean if necessary.
– Activate test mode; cooling function OK?
– Check noise generation of compressor and fans.

7.1 Compressed air cleaning 3304.xxx, 3305.xxx



Fig. 34: Disconnect the mains plug

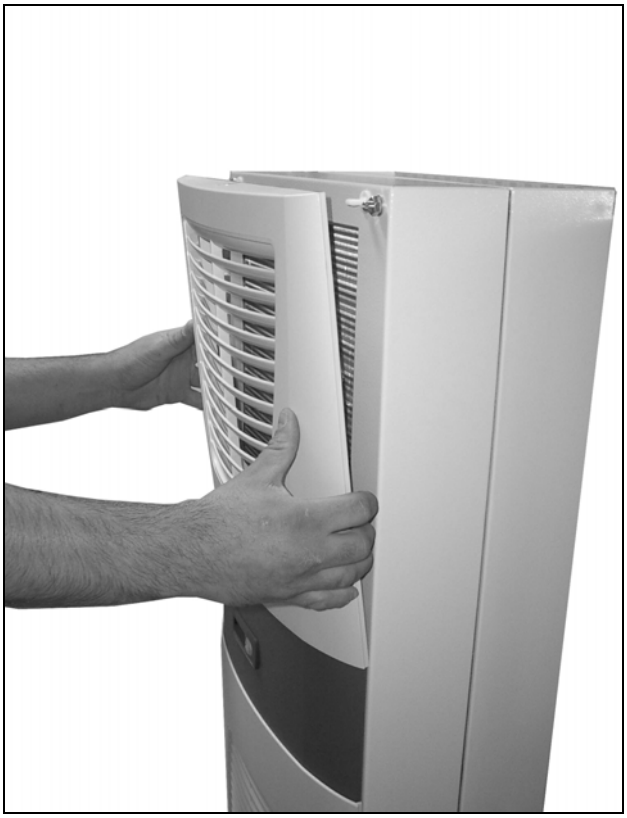

Fig. 35: Remove the top louvred grille



Fig. 36: Remove the bottom louvred grille



Fig. 37: Remove the infill panel



Fig. 38: Disconnect the connector from the display (1)

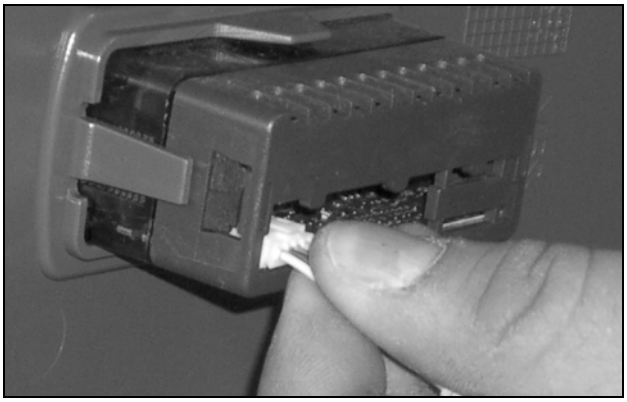

Fig. 39: Disconnect the connector from the display (2)



Fig. 40: Cooling unit without grille

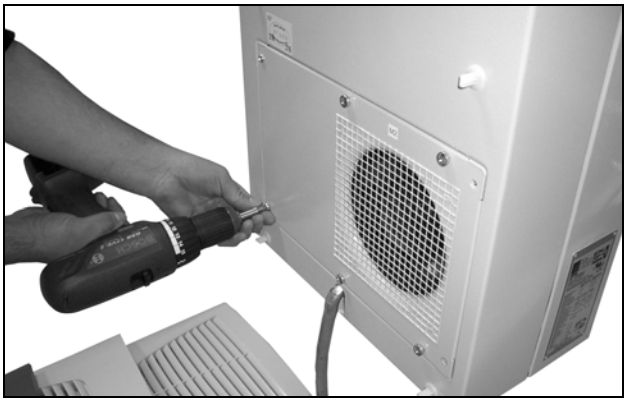

Fig. 41: Remove the external circuit fan (undo four screws)

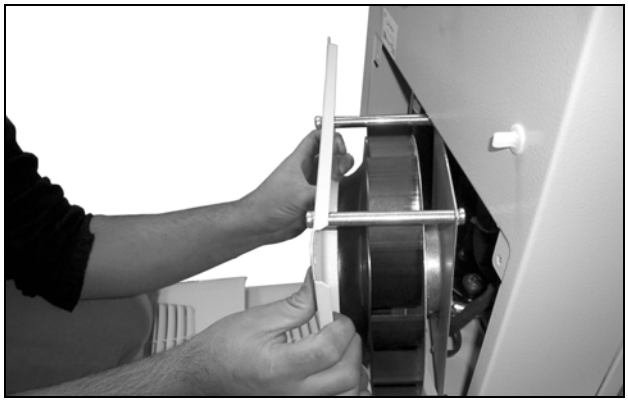

Fig. 42: Remove the fan

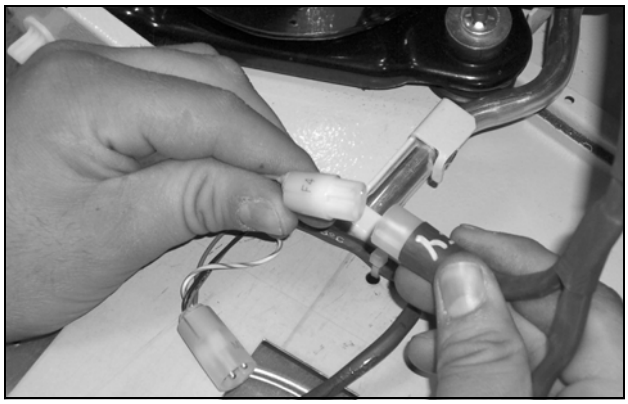

Fig. 43: Disconnect the fan connectors



Fig. 44: Remove the cover (undo the four nuts)

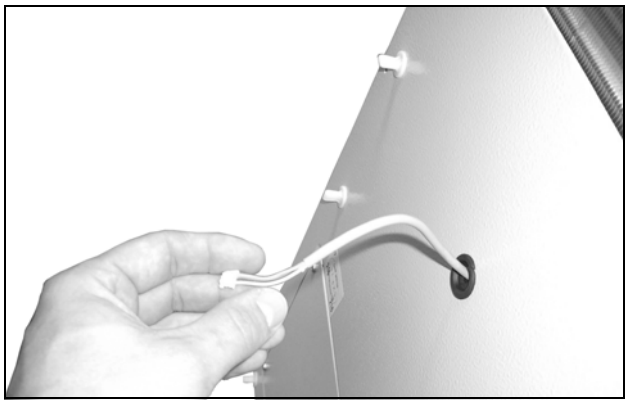

Fig. 45: Slide the display cable back

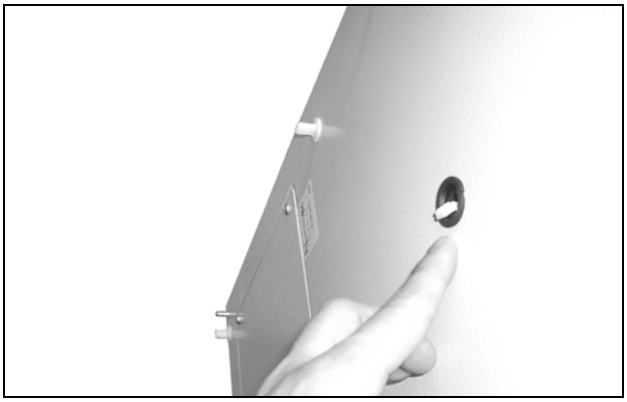

Fig. 46: Push the display cable through the cable gland



Fig. 47: Remove the cover (1)



Fig. 48: Remove the cover (2)

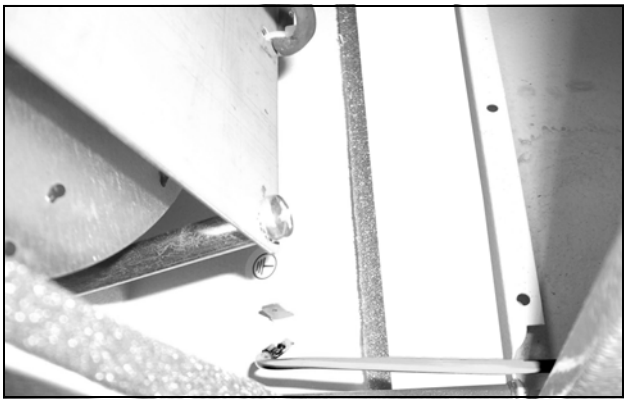

Fig. 49: Release the earthing cable between the cover and the chassis (1)

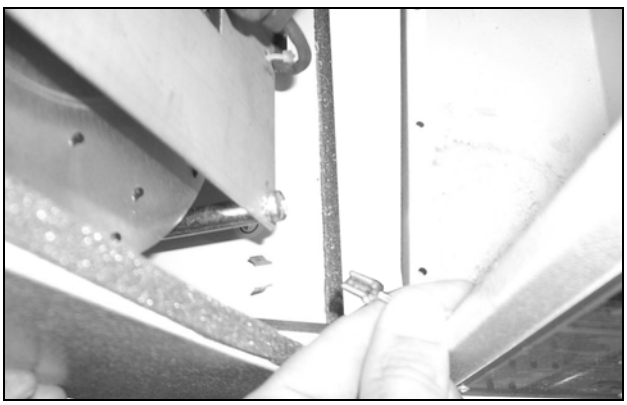

Fig. 50: Release the earthing cable between the cover and the chassis (2)

EN



Fig. 51: Clean the heat exchanger coil and compressor chamber using compressed air (1)

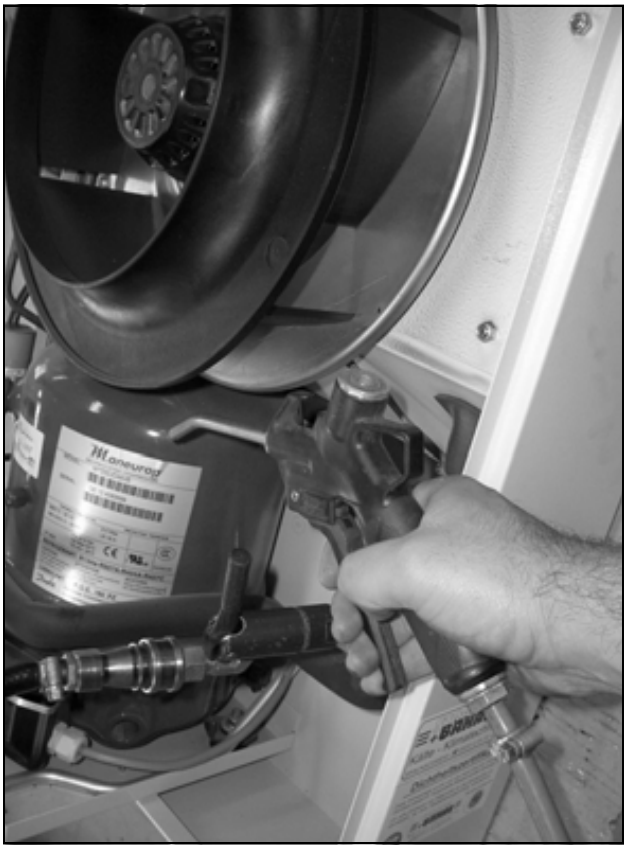

Fig. 52: Clean the heat exchanger coil and compressor chamber using compressed air (2)

7.2 Compressed air cleaning 3328.xxx, 3329.xxx, 3332.xxx



Fig. 53: Disconnect the mains plug



Fig. 54: Remove the top louvred grille (1)



Fig. 55: Remove the top louvred grille (2)



Fig. 57: Remove the bottom louvred grille (1)



Fig. 56: Remove the top louvred grille (3)



Fig. 58: Remove the bottom louvred grille (2)

EN



Fig. 59: Take off the infill panel



Fig. 60: Disconnect the display cable

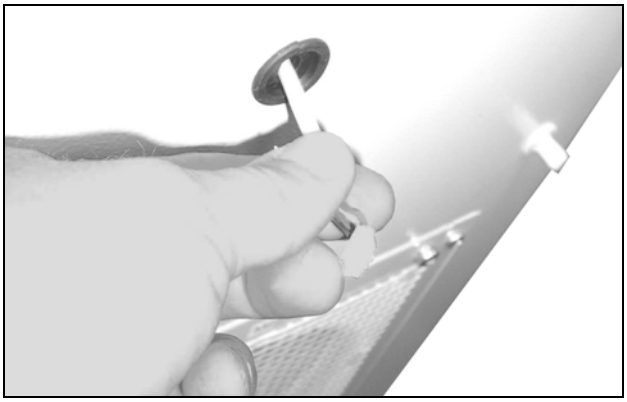

Fig. 61: Slide the display cable back and push it through the cable gland (1)

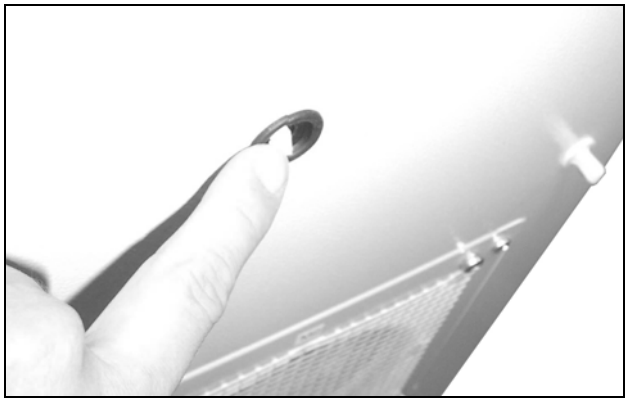

Fig. 62: Slide the display cable back and push it through the cable gland (2)

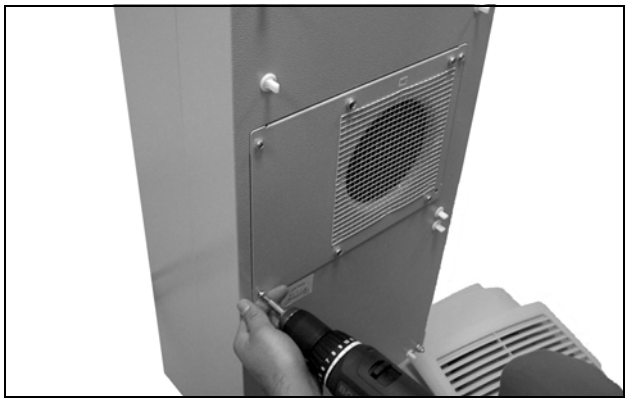

Fig. 63: Undo the four screws for the external circuit fan

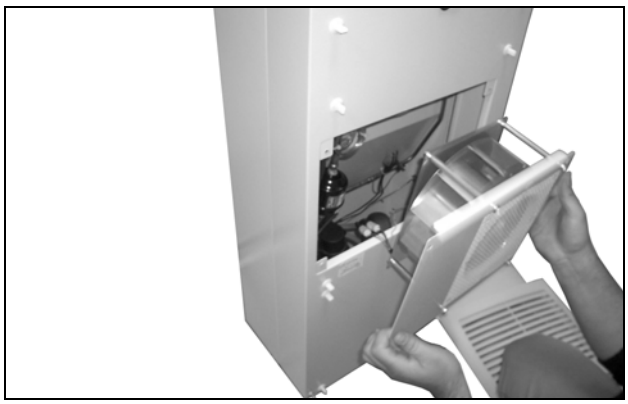

Fig. 64: Remove the external circuit fan



Fig. 65: Disconnect the fan connectors (1)

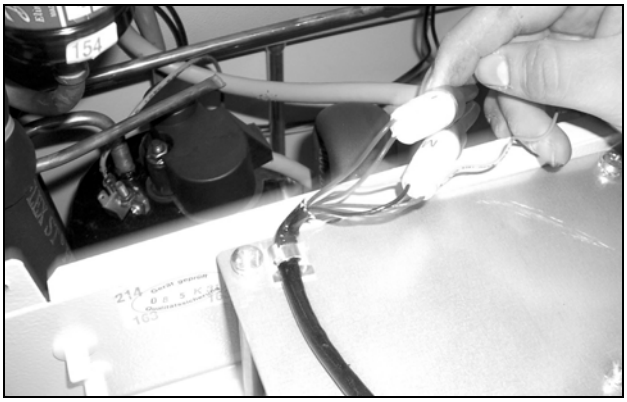

Fig. 66: Disconnect the fan connectors (2)

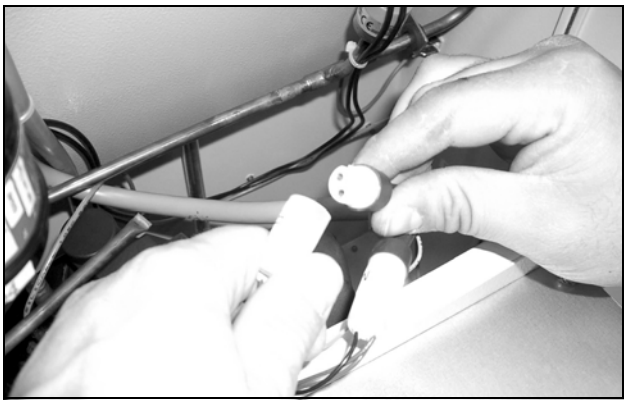

Fig. 67: Disconnect the fan connectors (3)

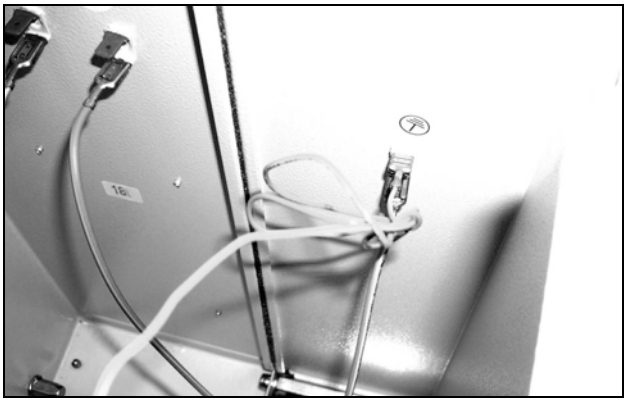

Fig. 68: Disconnect the fan earthing cable (1)

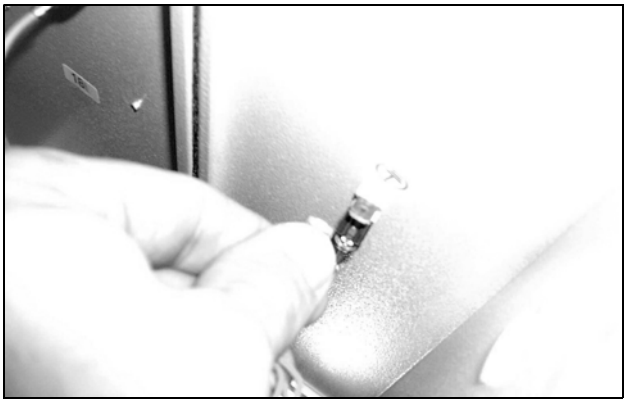

Fig. 69: Disconnect the fan earthing cable (2)



Fig. 70: Undo the four screws for the cover



Fig. 71: Removing the cover



Fig. 72: Disconnect the earthing cable (1)



Fig. 73: Disconnect the earthing cable (2)

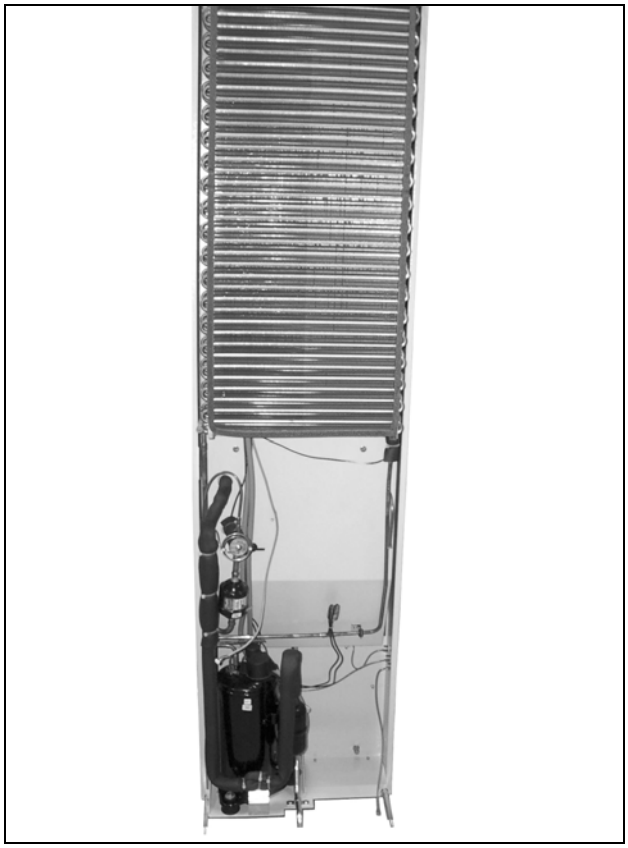

Fig. 74: Clean the heat exchanger coil and compressor chamber using compressed air (1)



Fig. 75: Clean the heat exchanger coil and compressor chamber using compressed air (2)

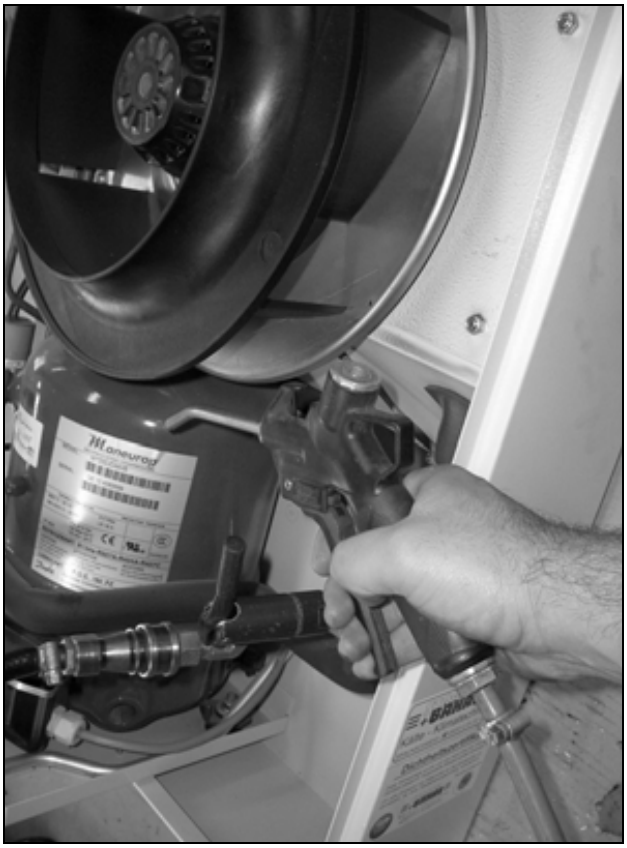

Fig. 76: Clean the heat exchanger coil and compressor chamber using compressed air (3)

7.3 Installation instructions for NEMA 4X devices

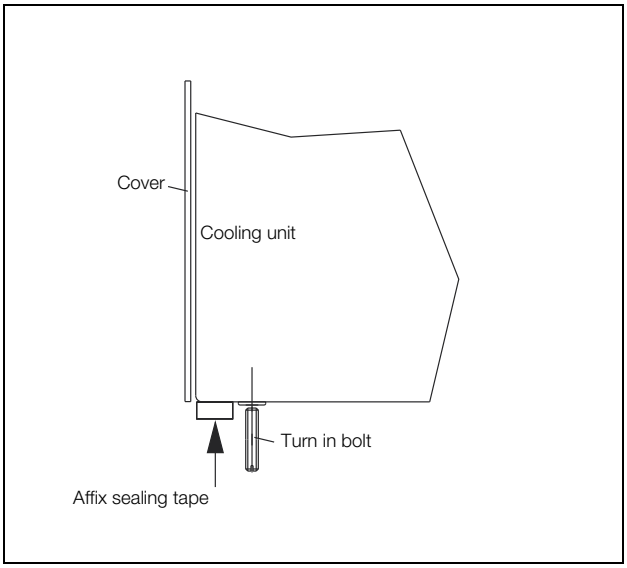

Fig. 77: Preparation

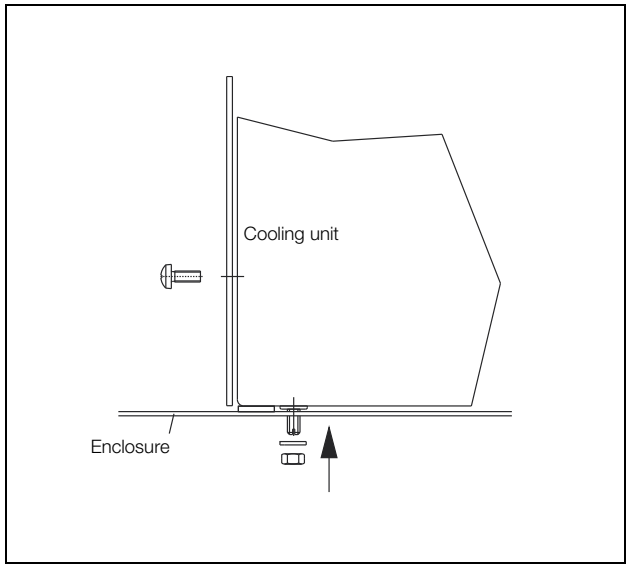

Fig. 78: Device mounting

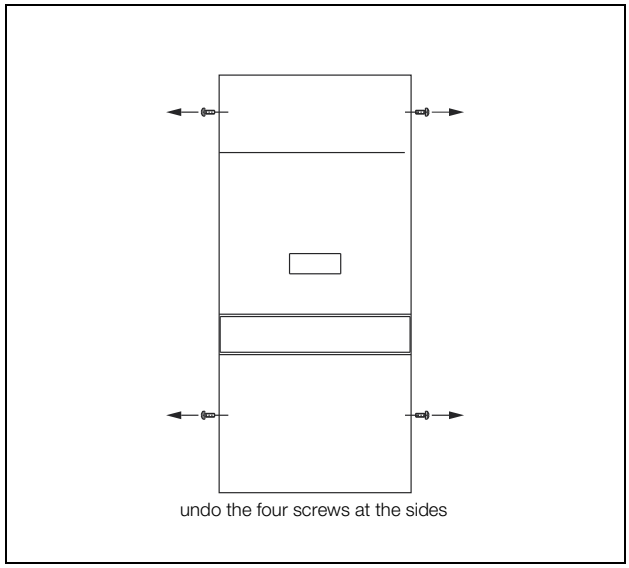

Fig. 79: Remove the cover (1)

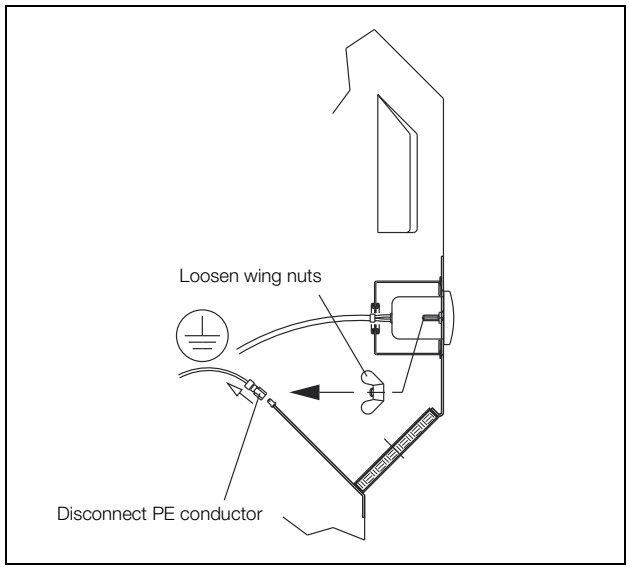

Fig. 80: Remove the cover (2)

EN

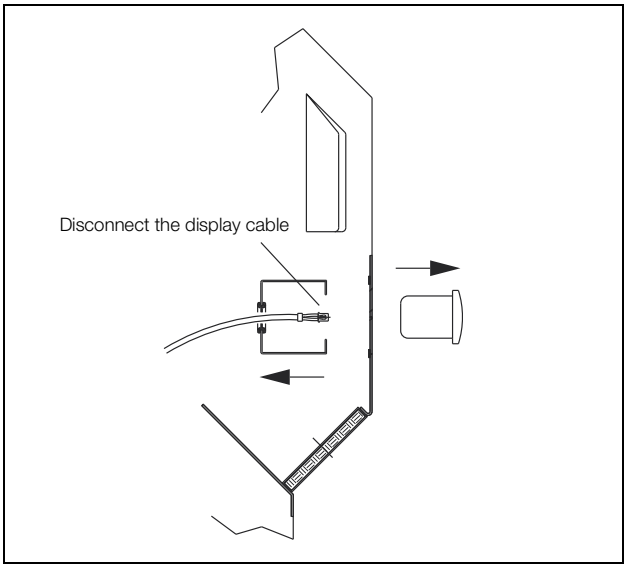

Fig. 81: Remove the cover (3)

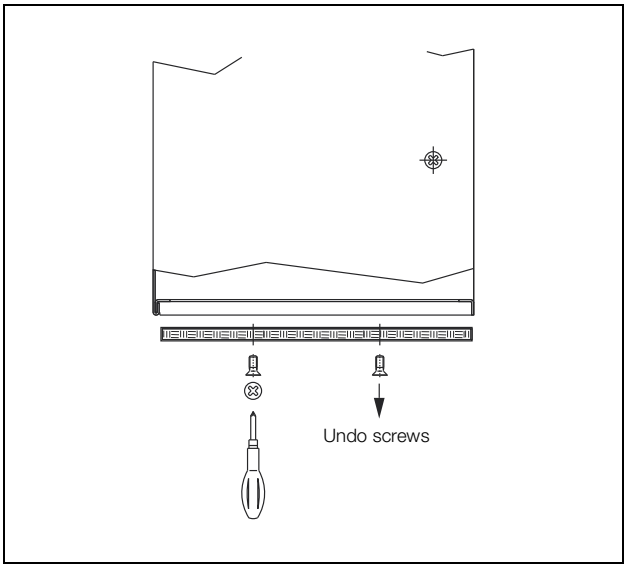

Fig. 82: Change filter

8 Storage and disposal

Note:
The cooling unit must not be subjected to temperatures above +70°C during storage.

Store the cooling unit in the appropriate position for transport.
The closed cooling cycle contains refrigerant and oil, which must be properly disposed of for the protection of the environment. Facilities for disposal are available at the Rittal plant.
Please contact us for advice.

9 Technical details

9.1 Technical specifications

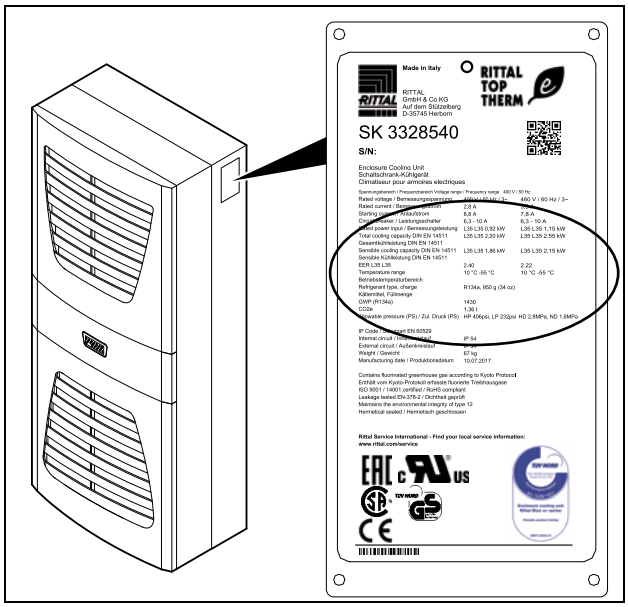

Fig. 83: Rating plate (technical data)

– Observe the mains connection data (voltage and frequency) as per the rating plate.
– Observe the pre-fuse as per the specifications on the rating plate.

	Unit	Model No.							
Basic controller, RAL 7035	–	**3302.100**	**3302.110**	**3302.300**	**3302.310**	–	–	–	–
Basic controller, stainless steel cover	–	**3302.200**	**3302.210**	–	–	–	–	–	–
e-Comfort controller, RAL 7035	–	–	–	–	–	**3303.500**	**3303.510**	**3304.500**	**3304.510**
e-Comfort controller, stainless steel cover	–	–	–	–	–	**3303.600**	**3303.610**	**3304.600**	**3304.610**
Rated voltage	V Hz	230, 1~, 50/60	115, 1~, 60	230, 1~, 50/60	115, 1~, 60	230, 1~, 50/60	115, 1~, 60	230, 1~, 50/60	115, 1~, 50/60
Rated current	A	1.6/1.7	3.3	1.6/1.7	4.0	2.6/2.6	5.7	3.9/4.3	8.0/8.8
Start-up current	A	3.0/3.4	8.0	4.3/5.3	12.0	5.1/6.4	11.5	12.0/14.0	26.0/28.0
Pre-fuse T	A	10.0	10.0	10.0	10.0	10.0	10.0	10.0	–
Circuit-breaker	A	–	–	–	–	–	–	–	–
Transformer circuit-breaker	A	–	–	–	–	–	–	–	11.0…16.0
Miniature circuit-breaker or gG slow fuse (T)	–	■	■	■	■	■	■	■	–
Total cooling output P_C to DIN EN 14511 L 35 L 35 L 35 L 50	kW kW	0.36/0.38 0.21/0.23	0.38 0.23	0.36/0.38 0.21/0.23	0.38 0.23	0.55/0.66 0.33/0.40	0.66 0.40	1.10/1.25 0.91/0.90	1.10/1.25 0.91/0.90
Sensible cooling output P_s to DIN EN 14511 L 35 L 35	kW	0.32/0.33	0.33	0.32/0.33	0.33	0.42/0.50	0.50	0.99/1.12	0.99/1.12
Rated output P_{el} to DIN EN 14511 L 35 L 35 L 35 L 50	kW kW	0.27/0.28 0.28/0.30	0.32 0.37	0.27/0.29 0.31/0.33	0.32 0.37	0.39/0.41 0.45/0.42	0.50 0.53	0.64/0.68 0.71/0.81	0.64/0.68 0.71/0.81
Energy efficiency ratio (EER) 50Hz L 35 L 35		1.30	1.18	1.34	1.18	1.40	1.40	1.83	1.83
Refrigerant – Type – Filling	– g	R134a 100	R134a 100	R134a 100	R134a 95	R134a 170	R134a 170	R134a 325	R134a 325
GWP	–	1430							
CO_2e	t	0.14	0.14	0.14	0.13	0.24	0.24	0.46	0.46
Permissible pressure	MPa	HP 2.5 LP 1.6				HP 2.8 LP 1.6			
Operating temperature range	°C	+10…+55							
Setting range	°C	+30…+55				+20…+55			
Noise level	dB (A)	≤ 61						≤ 64	
Protection category to IEC 60 529 – Internal circuit – External circuit	 – –	 IP 54 IP 34							
UL-Type rating	–	12							
Dimensions (W x H x D)	mm	280 x 550 x 140		525 x 340 x 153		280 x 550 x 210		400 x 950 x 260	
Weight	kg	13	13	13	13	17	17	39	44

9 Technical details

EN

	Unit	Model No.			
e-Comfort controller, RAL 7035	**–**	**3304.540**	**3305.500**	**3305.510**	**3305.540**
e-Comfort controller, stainless steel cover	**–**	**3304.640**	**3305.600**	**3305.610**	**3305.640**
Rated voltage	V, Hz	400, 3~, 50/ 460, 3~, 60	230, 1~, 50/60	115, 1~, 50/60	400, 3~, 50/ 460, 3~, 60
Rated current	A	2.2/2.1	5.5/5.8	11.5/12.5	2.5/2.8
Start-up current	A	11.5/12.7	12.0/14.0	26.0/28.0	12.2/11.3
Pre-fuse T	A	–	16.0	–	–
Circuit-breaker	A	6.3…10.0	–	–	6.3…10.0
Transformer circuit-breaker	A	–	–	14.0…20.0	–
Miniature circuit-breaker or gG slow fuse (T)	–	–	■	–	–
Total cooling output P_c L 35 L 35 to DIN EN 14511 L 35 L 50	kW kW	1.10/1.25 0.98/0.90	1.60/1.76 1.25/1.37	1.60/1.76 1.25/1.37	1.60/1.61 1.33/1.35
Sensible cooling output P_s to DIN EN 14511 L 35 L 35	kW	0.94/1.07	1.29/1.42	1.29/1.42	1.25/1.25
Rated output P_{el} L 35 L 35 to DIN EN 14511 L 35 L 50	kW kW	0.64/0.79 0.73/0.90	0.87/0.98 1.03/1.15	0.87/0.98 1.03/1.15	0.90/1.08 1.06/1.25
Energy efficiency ratio (EER) 50Hz L 35 L 35		1.72	1.83	1.83	1.83
Refrigerant – Type – Filling	– g	R134a 325	R134a 500	R134a 500	R134a 500
GWP	–	1430			
CO_2e	t	0.46	0.72	0.72	0.72
Permissible pressure	MPa	HP 2.8 LP 1.6			
Operating temperature range	°C	+10…+55			
Setting range	°C	+20…+55			
Noise level	dB (A)	≤ 69	≤ 64		≤ 69
Protection category to IEC 60 529 – Internal circuit – External circuit	 – –	 IP 54 IP 34			
UL-Type rating	–	12			
Dimensions (W x H x D)	mm	400 x 950 x 260			
Weight	kg	40	41	46	42

	Unit	Model No.			
e-Comfort controller, RAL 7035	–	**3328.500**	**3328.510**	**3328.540**	**3329.500**
e-Comfort controller, stainless steel cover	–	**3328.600**	**3328.610**	**3328.640**	**3329.600**
Rated voltage	V, Hz	230, 1~, 50/60	115, 1~, 50/60	400, 3~, 50/ 460, 3~, 60	230, 1~, 50/60
Rated current	A	5,8/6.8	13.4/14.8	2.2/2.2	7,9/9.3
Start-up current	A	20.0/22.0	27.0/27.0	6.8/7.8	25.0/22.0
Pre-fuse T	A	16.0	–	–	16.0
Circuit-breaker	A	–	–	6.3…10.0	–
Transformer circuit-breaker	A	–	18.0…25.0	–	–
Miniature circuit-breaker or gG slow fuse (T)	–	■	–	–	■
Total cooling power P_c L 35 L 35 to DIN EN 14511 L 35 L 50	kW kW	2.10/2.44 1.6/1.85	2.10/2.44 1.6/1.85	2.05/2.25 1.6/1.88	2.55/2.71 1.8/1.8
Sensible cooling output P_s to DIN EN 14511 L 35 L 35	kW	1.83/2.12	1.83/2.12	1.86/2.15	2.19/2.33
Rated output P_{el} L 35 L 35 to DIN EN 14511 L 35 L 50	kW kW	0.86/1.04 1.02/1.23	0.86/1.04 1.02/1.23	0.92/1.15 1.15/1.30	1.21/1.35 1.41/1.64
Energy efficiency ratio (EER) 50Hz L 35 L 35		2.40	2.40	2.40	2.11
Refrigerant – Type – Filling	– g	R134a 950	R134a 950	R134a 950	R134a 950
GWP	–	1430			
CO_2e	t	1.36	1.36	1.36	1.36
Permissible pressure	MPa	HP 2.8 LP 1.6			
Operating temperature range	°C	+10…+55			
Setting range	°C	+20…+55			
Noise level	dB (A)	≤ 68	≤ 69		72
Protection category to IEC 60 529 – Internal circuit – External circuit	 – –	 IP 54 IP 34			
UL-Type rating	–	12			
Dimensions (W x H x D)	mm	400 x 1580 x 295			
Weight	kg	66	73	67	69

9 Technical details

EN

	Unit	Model No.					
e-Comfort controller, RAL 7035	**–**	**3329.510**	**3329.540**	**3332.540**	**3361.500**	**3361.510**	**3361.540**
e-Comfort controller, stainless steel cover	**–**	**3329.610**	**3329.640**	**3332.640**	**3361.600**	**3361.610**	**3361.640**
Rated voltage	V, Hz	115, 1~, 50/60	400, 3~, 50/ 460, 3~, 60	400, 3~, 50/ 460, 3~, 60	230, 1~, 50/60	115, 1~, 60	400, 2~, 50/60
Rated current	A	17.0/22.0	3.3/3.4	4.2/4.2	2.7/2.7	5.3	1.2/1,4
Start-up current	A	44.0/42.0	6.8/7.6	9.2/11.0	6.0/9.6	12.0	6.0/9.6
Pre-fuse T	A	–	–	–	10.0	10.0	–
Circuit-breaker	A	–	6.3…10.0	6.3…10.0	–	–	–
Transformer circuit-breaker	A	18.0…25.0	–	–	–	–	6.3…10.0
Miniature circuit-breaker or gG slow fuse (T)	–	–	–	–	■	■	–
Total cooling output P_c L 35 L 35 to DIN EN 14511 L 35 L 50	kW kW	2.55/2.71 1.80/1.8	2.55/2.75 1.95/2.00	3.95/4.35 3.02/3.52	0.85/0.89 0.67/0.67	0.89 0.67	0.85/0.89 0.67/0.67
Sensible cooling output P_s to DIN EN 14511 L 35 L 35	kW	2.19/2.33	2.03/2.19	3.25/3.58	0.70/0.73	0.70	0.70/0.73
Rated output P_{el} L 35 L 35 to DIN EN 14511 L 35 L 50	kW kW	1.21/1.35 1.41/1.64	1.19/1.39 1.45/1.75	1.60/2.00 1.87/2.34	0.40/0.43 0.47/0.50	0.55 0.66	0.40/0.43 0.47/0.50
Energy efficiency ratio (EER) 50Hz L 35 L 35		2.11	2.11	2.47	2.08	1.59	2.08
Refrigerant – Type – Filling	– g	R134a 950	R134a 950	R134a 2995	R134a 280	R134a 260	R134a 280
GWP	–	1430					
CO_2e	t	1.36	1.36	4.28	0.40	0.37	0.40
Permissible pressure	MPa	HP 2.8 LP 1.6					
Operating temperature range	°C	+10…+55					
Operating temperature 60 Hz	°C	+10…+55			+10…+53	+10…+52	+10…+53
Setting range	°C	+20…+55					
Noise level	dB (A)	72	≤ 69	≤ 66	≤ 64		
Protection category to IEC 60 529 – Internal circuit – External circuit	 – –	IP 54 IP 34					
UL-Type rating	–	12					
Dimensions (W x H x D)	mm	400 x 1580 x 295		500 x 1580 x 340	280 x 550 x 280		
Weight	kg	76	70	91	22	22	22

	Unit	Model No.		
e-Comfort controller, RAL 7035	**–**	**3366.500/3377.500**	**3366.510/3377.510**	**3366.540/3377.540**
e-Comfort controller, stainless steel cover	**–**	**3366.600/3377.600**	**3366.610/3377.610**	**3366.640/3377.640**
Rated voltage	V, Hz	230, 1~, 50/60	115, 1~, 50/60	400, 3~, 50/ 460, 3~, 60
Rated current	A	6.7/6.9	13.6/13.8	2.7/2.9
Start-up current	A	22.0/24.0	43.0/47.0	8.0/8.8
Pre-fuse T	A	10.0	–	–
Circuit-breaker	A	–	–	6.3…10.0
Transformer circuit-breaker	A	–	14.0…20.0	–
Miniature circuit-breaker or gG slow fuse (T)	–	■	–	–
Total cooling power P_c L 35 L 35 to DIN EN 14511 L 35 L 50	kW kW	1.60/1.60 1.15/1.20	1.60/1.60 1.15/1.20	1.60/1.60 1.08/1.18
Sensible cooling output P_s to DIN EN 14511 L 35 L 35	kW	1.47/1.47	1.47/1.47	1.30/1.30
Rated output P_{el} L 35 L 35 to DIN EN 14511 L 35 L 50	kW kW	0.84/0.97 1.02/1.13	0.84/0.97 1.02/1.13	0.90/1.05 1.08/1.25
Energy efficiency ratio (EER) 50Hz L 35 L 35		1.90	1.90	1.90
Refrigerant – Type – Filling	– g	R134a 700	R134a 700	R134a 700
GWP	–	1430		
CO_2e	t	1.00	1.00	1.00
Permissible pressure	MPa	HP 2.8 LP 1.6		
Operating temperature range	°C	+10…+55		
Setting range	°C	+20…+55		
Noise level	dB (A)	72		
Protection category to IEC 60 529 – Internal circuit – External circuit	 – –	 IP 54 IP 34		
UL-Type rating	–	12		
Dimensions (W x H x D)	mm	3366: 435 x 1590 x 204 / 3377: 435 x 1590 x 165		
Weight	kg	45	49	46

9 Technical details

EN

	Unit	Model No.							
e-Comfort controller, NEMA 4x	**–**	**3303.504**	**3303.514**	**3304.504**	**3304.514**	**3304.544**	**3305.504**	**3305.514**	**3305.544**
Rated voltage	V Hz	230, 1~, 50/60	115, 1~, 60	230, 1~, 50/60	115, 1~, 50/60	400, 3~, 50/ 460, 3~, 60	230, 1~, 50/60	115, 1~, 50/60	400, 3~, 50/ 460, 3~, 60
Rated current	A	2.6/2.6	5.7	3.9/4.3	8.0/8.8	2.2/2.1	5.5/5.8	11.5/12.5	2.5/2.8
Start-up current	A	5.1/6.4	11.5	12.0/14.0	26.0/28.0	11.5/12.7	12.0/14.0	26.0/28.0	12.2/11.3
Pre-fuse T	A	10.0	10.0	10.0	–	–	16.0	–	–
Circuit-breaker	A	–	–	–	–	6.3…10.0	–	–	6.3…10.0
Transformer circuit-breaker	A	–	–	–	11.0…16.0	–	–	14.0…20.0	–
Miniature circuit-breaker or gG slow fuse (T)	–	■	■	■	–	–	■	–	–
Total cooling output P_c to L 35 L 35 DIN EN 14511 L 35 L 50	 kW kW	 0.55/0.66 0.33/0.40	 0.66 0.40	 1.10/1.25 0.91/0.90	 1.10/1.25 0.91/0.90	 1.10/1.25 0.98/1,09	 1.60/1.76 1.25/1.37	 1.60/1.76 1.25/1.37	 1.60/1.61 1.33/1.35
Sensible cooling output P_s to DIN EN 14511 L 35 L 35	 kW	 0.42/0.50	 0.50	 0.99/1.12	 0.99/1.12	 0.94/1.07	 1.29/1.42	 1.29/1.42	 1.25/1.25
Rated output P_{el} to L 35 L 35 DIN EN 14511 L 35 L 50	 kW kW	 0.39/0.41 0.42/0.39	 0.50 0.50	 0.64/0.68 0.71/0.81	 0.64/0.68 0.71/0.81	 0.64/0.79 0.73/0.93	 0.87/0.98 0.90/1.15	 0.87/0.98 1.03/1.15	 0.90/1.08 1.06/1.25
Energy efficiency ratio (EER) 50Hz L 35 L 35		1.40	1.31	1.83	1.83	1.83	1.83	1.83	1.83
Refrigerant – Type – Filling	– g	R134a 170	R134a 170	R134a 325	R134a 325	R134a 325	R134a 500	R134a 500	R134a 500
GWP	–	1430							
CO_2e	t	0.24	0.24	0.46	0.46	0.46	0.72	0.72	0.72
Permissible pressure	MPa	HP 2.8 LP 1.6							
Operating temperature range	°C	+10…+55							
Setting range	°C	+20…+50							
Noise level	dB (A)	≤ 64				≤ 69	≤ 64		≤ 69
Protection category to IEC 60 529 – Internal circuit – External circuit	 – –	 IP 55 IP 34							
UL-Type rating	–	4X							
Dimensions (W x H x D)	mm	285 x 520 x 298		405 x 1020 x 358					
Weight	kg	25	25	49	54	50	51	46	52

	Unit	Model No.					
e-Comfort controller, NEMA 4x	**–**	**3328.504**	**3328.514**	**3328.544**	**3329.504**	**3329.514**	**3329.544**
Rated voltage	V Hz	230, 1~, 50/60	115, 1~, 50/60	400, 3~, 50/ 460, 3~, 60	230, 1~, 50/60	115, 1~, 50/60	400, 3~, 50/ 460, 3~, 60
Rated current	A	5,8/6.8	13.4/14.8	2.2/2.2	7.9/9.3	17.0/22.0	3.3/3.4
Start-up current	A	20.0/22.0	40.0/38.0	6.8/7.8	20.0/24.0	44.0/42.0	6.8/7.6
Pre-fuse T	A	16.0	–	–	16.0	–	–
Circuit-breaker	A	–	–	6.3…10.0	–	–	6.3…10.0
Transformer circuit-breaker	A	–	18.0…25.0	–	–	18.0…25.0	–
Miniature circuit-breaker or gG slow fuse (T)	–	■	–	–	■	–	–
Total cooling output P_C to L 35 L 35 DIN EN 14511 L 35 L 50	 kW kW	 2.1/2.44 1.6/1.85	 2.1/2.44 1.6/1.85	 2.05/2.25 1.6/1.8	 2.55/2.71 1.8/1.8	 2.55/2.71 1.8/1.8	 2.55/2.75 1.90/1.95
Sensible cooling output P_S to DIN EN 14511 L 35 L 35 2.19	 kW	 1.83/2.12	 1.90/2.21	 1.86/2.15	 2.19/2.33	 2.19/2.33	 2.03/
Rated output P_{el} to L 35 L 35 DIN EN 14511 L 35 L 50	 kW kW	 0.86/1.04 1.02/1.23	 0.86/1.04 1.02/1.23	 0.92/1.15 1.15/ 1.30	 1.21/1.35 1.41/1.64	 1.21/1.35 1.41/1.64	 1.19/1.39 1.44/1.75
Energy efficiency ratio (EER) 50Hz L 35 L 35		2.30	2.30	2.25	2.11	2.11	2.11
Refrigerant – Type – Filling	– g	R134a 900	R134a 900	R134a 900	R134a 900	R134a 900	R134a 900
GWP	–	1430					
CO_2e	t	1.29	1.29	1.29	1.29	1.29	1.29
Permissible pressure	MPa	HP 2.8 LP 1.6					
Operating temperature range	°C	+10…+50					
Setting range	°C	+20…+50					
Noise level	dB (A)	≤ 68		≤ 69	72		≤ 69
Protection category to IEC 60 529 – Internal circuit – External circuit	 – –	 IP 55 IP 34					
UL-Type rating	–	4X					
Dimensions (W x H x D)	mm	405 x 1650 x 388					
Weight	kg	80	87	81	83	90	84

9.2 Performance diagrams

The performance diagrams can be found on the Rittal homepage:
http://www.rittal.com/imf/none/3_5132/Rittal_3303500_Kennlinienfelder_3_5132

EN

10 List of spare parts

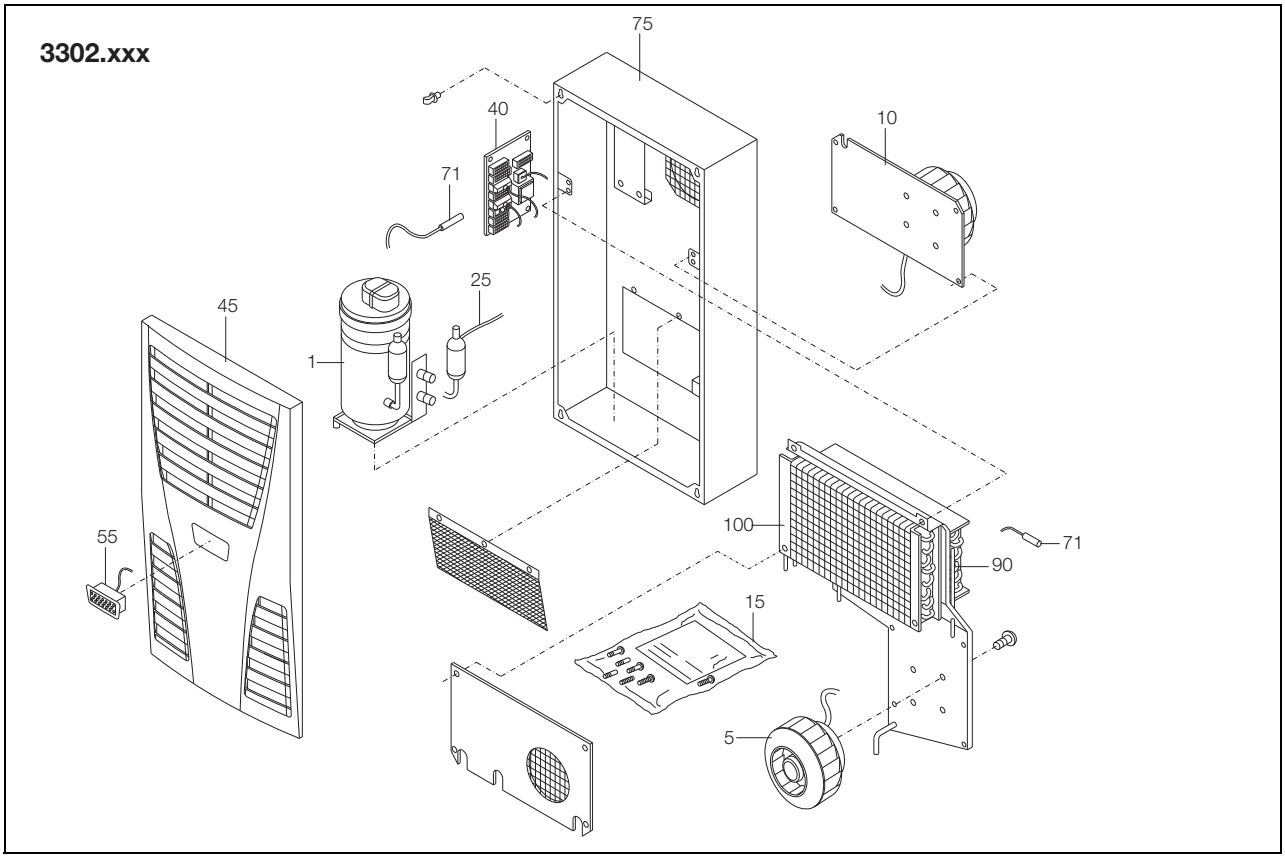

Fig. 84: Spare parts for 3302.xxx

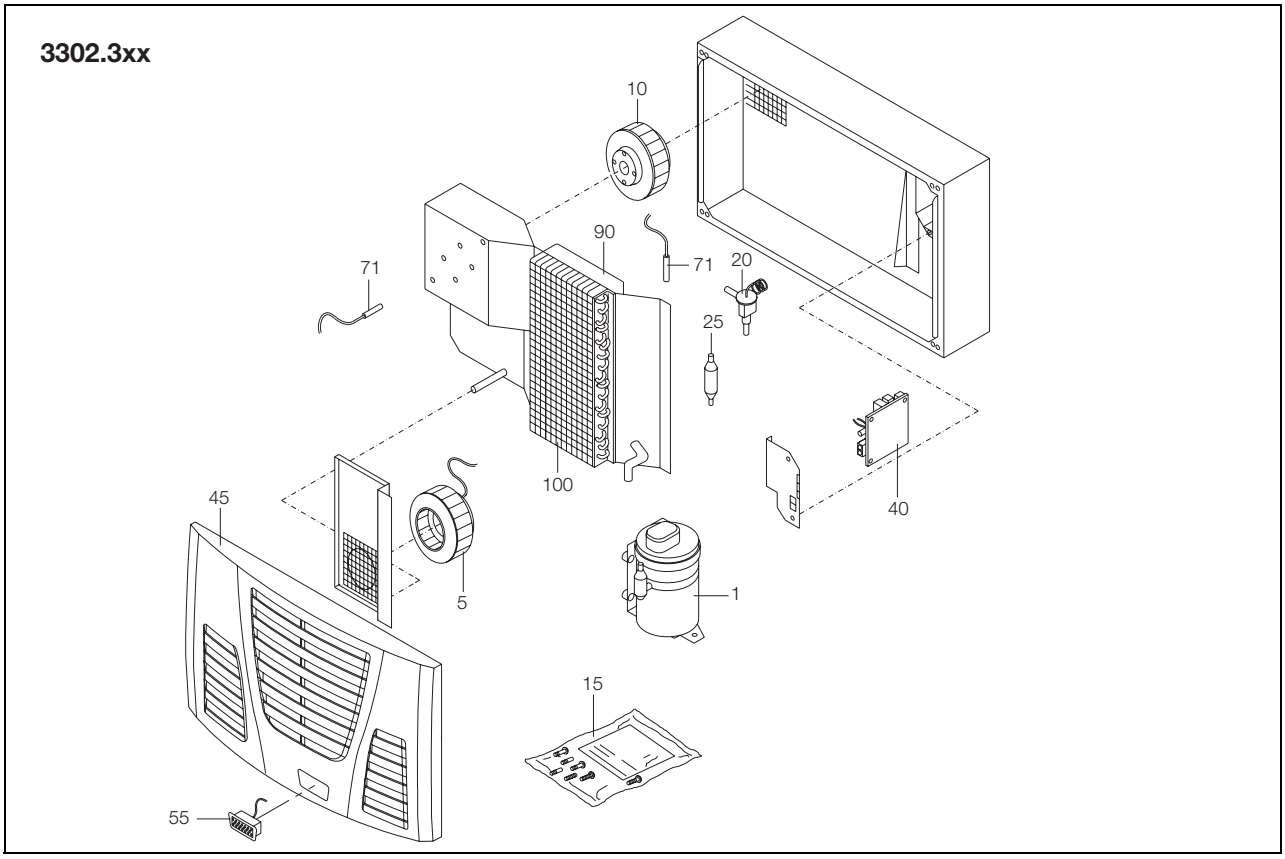

Fig. 85: Spare parts for 3302.3xx

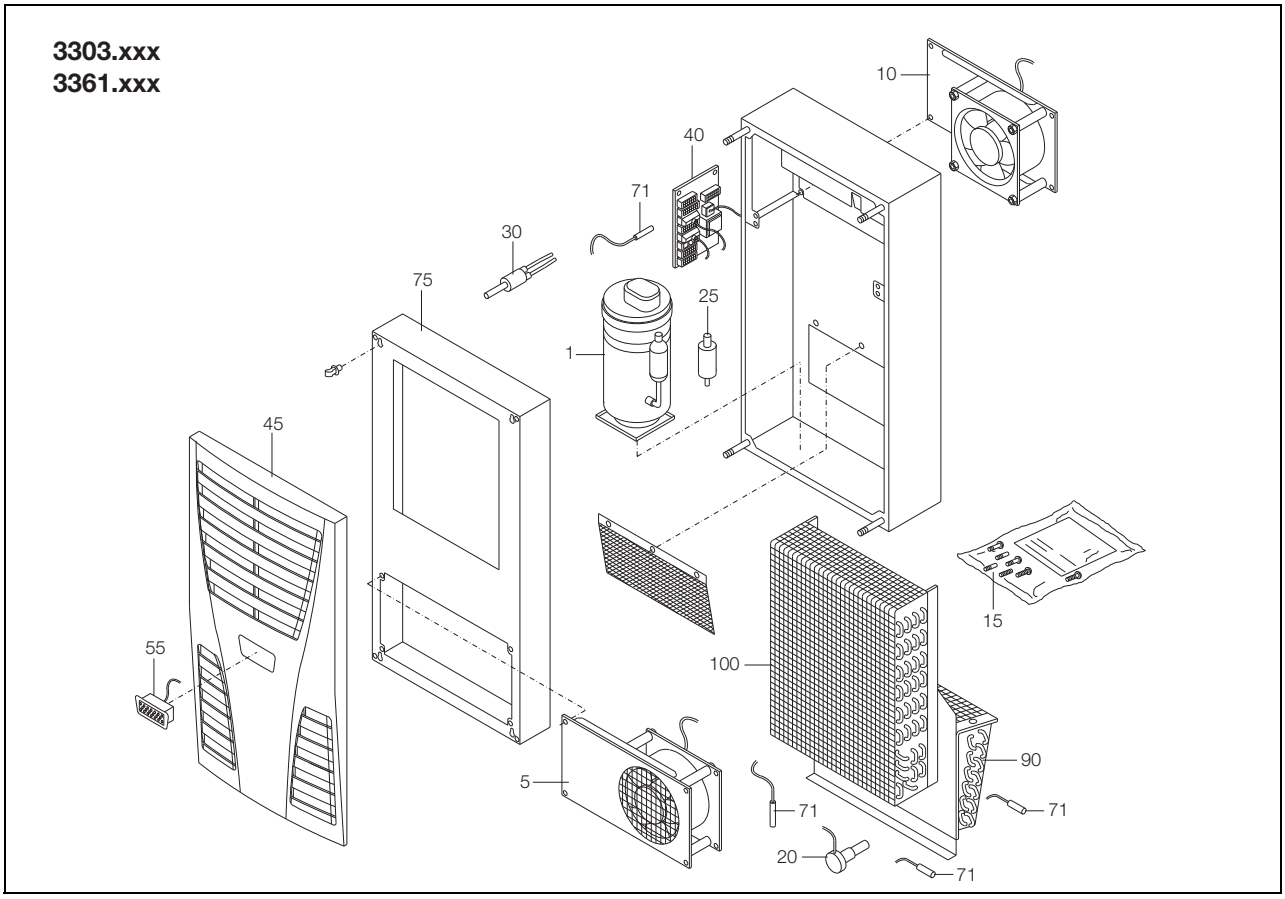

Fig. 86: Spare parts for 3303.xxx, 3361.xxx

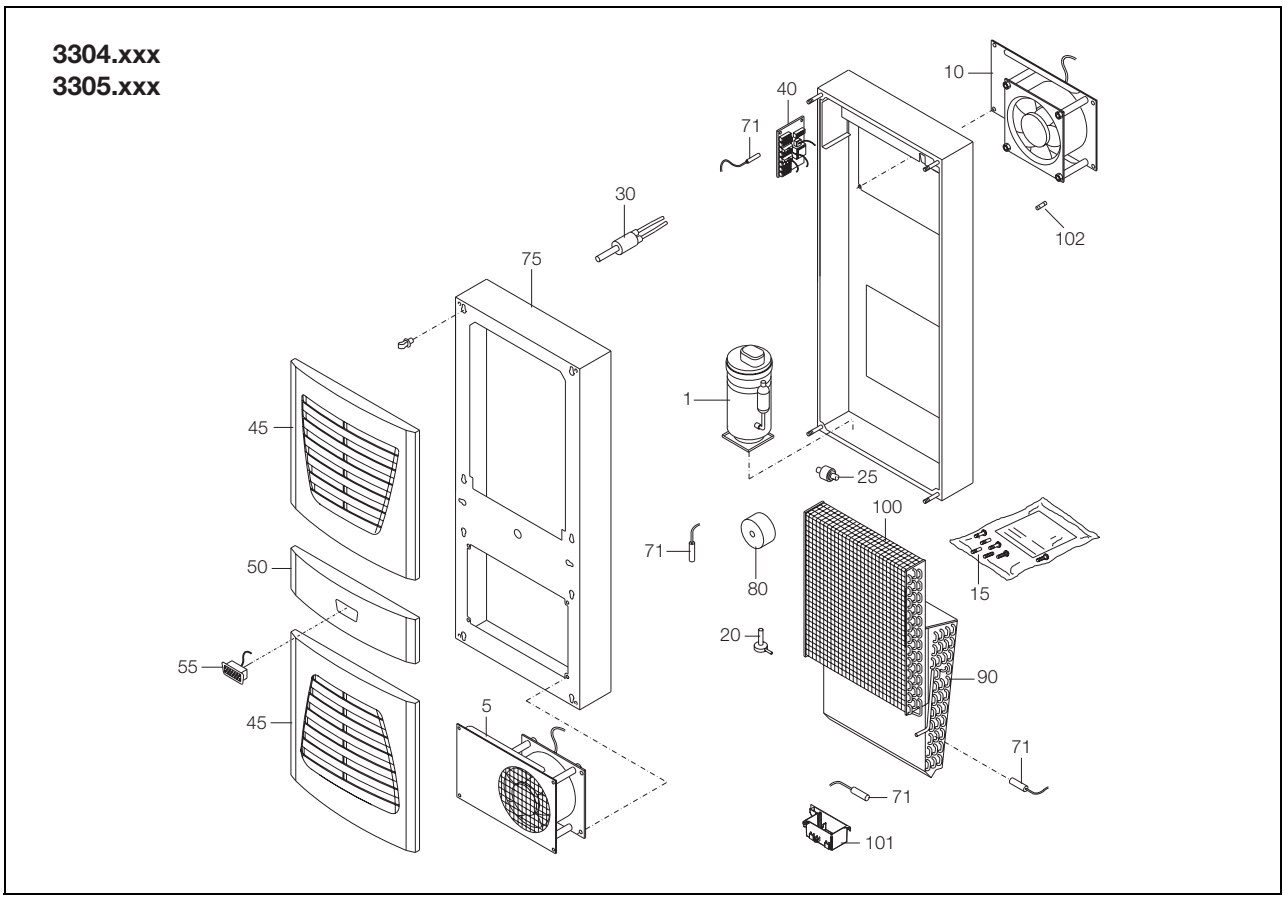

Fig. 87: Spare parts for 3304.xxx, 3305.xxx

EN

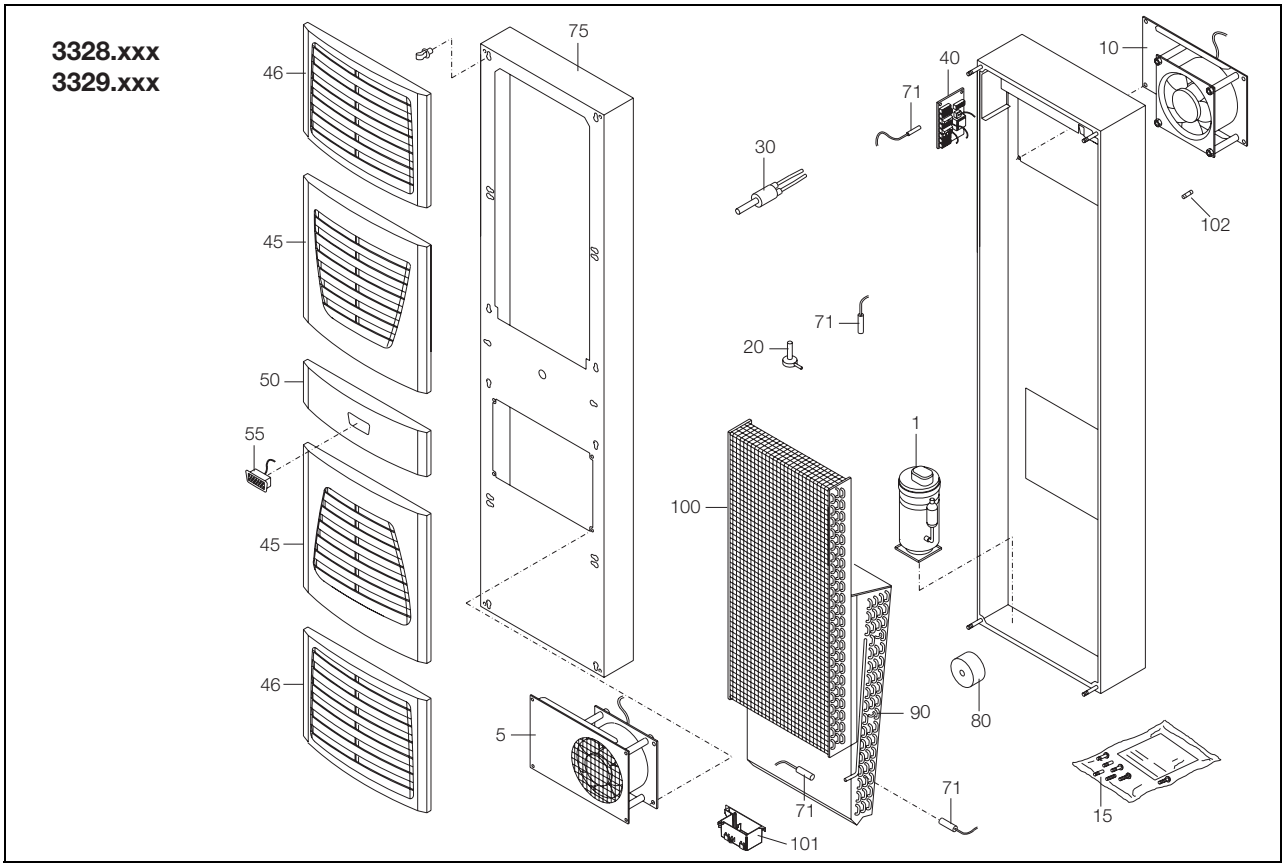

Fig. 88: Spare parts for 3328.xxx, 3329.xxx

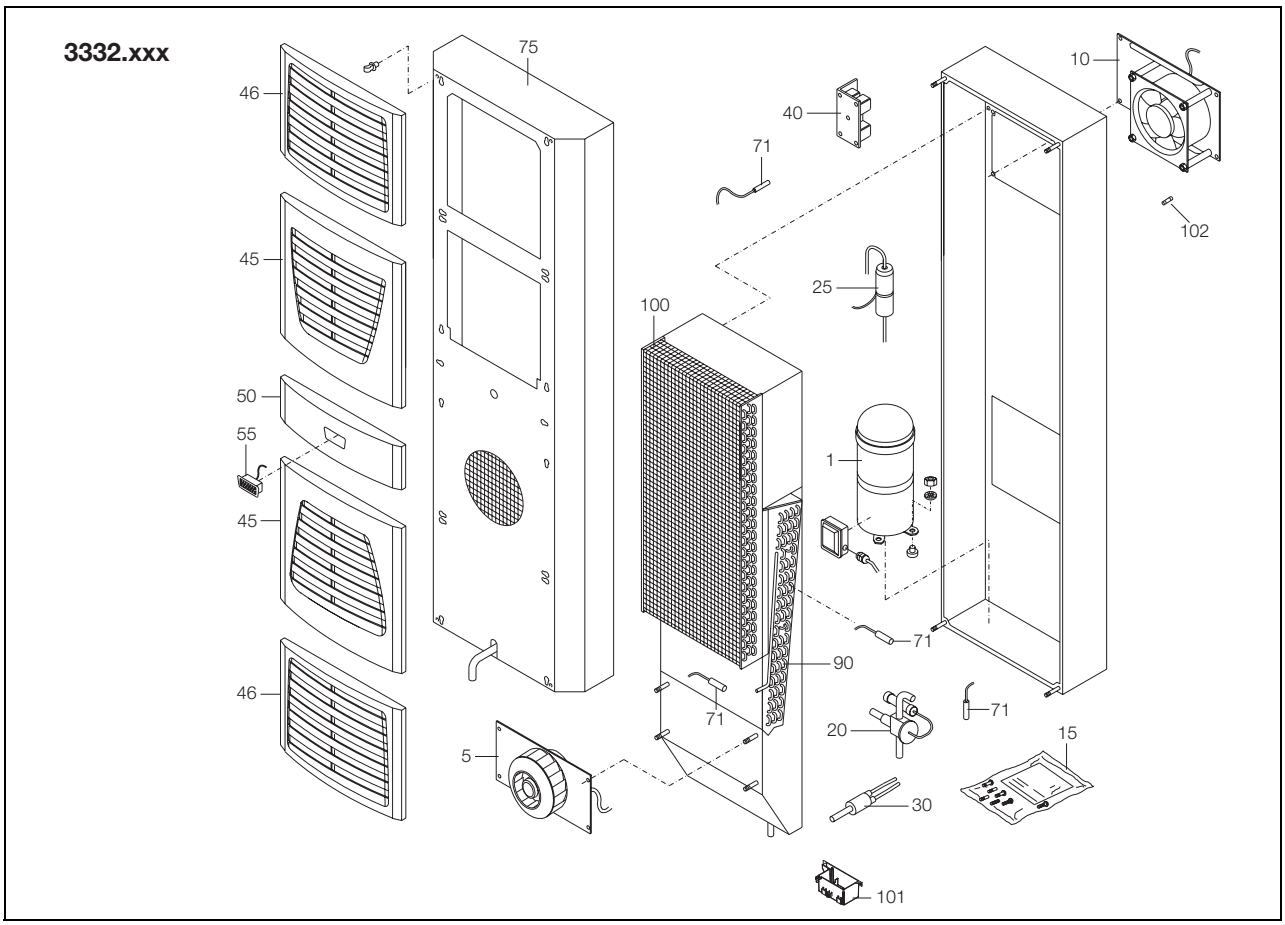

Fig. 89: Spare parts for 3332.xxx

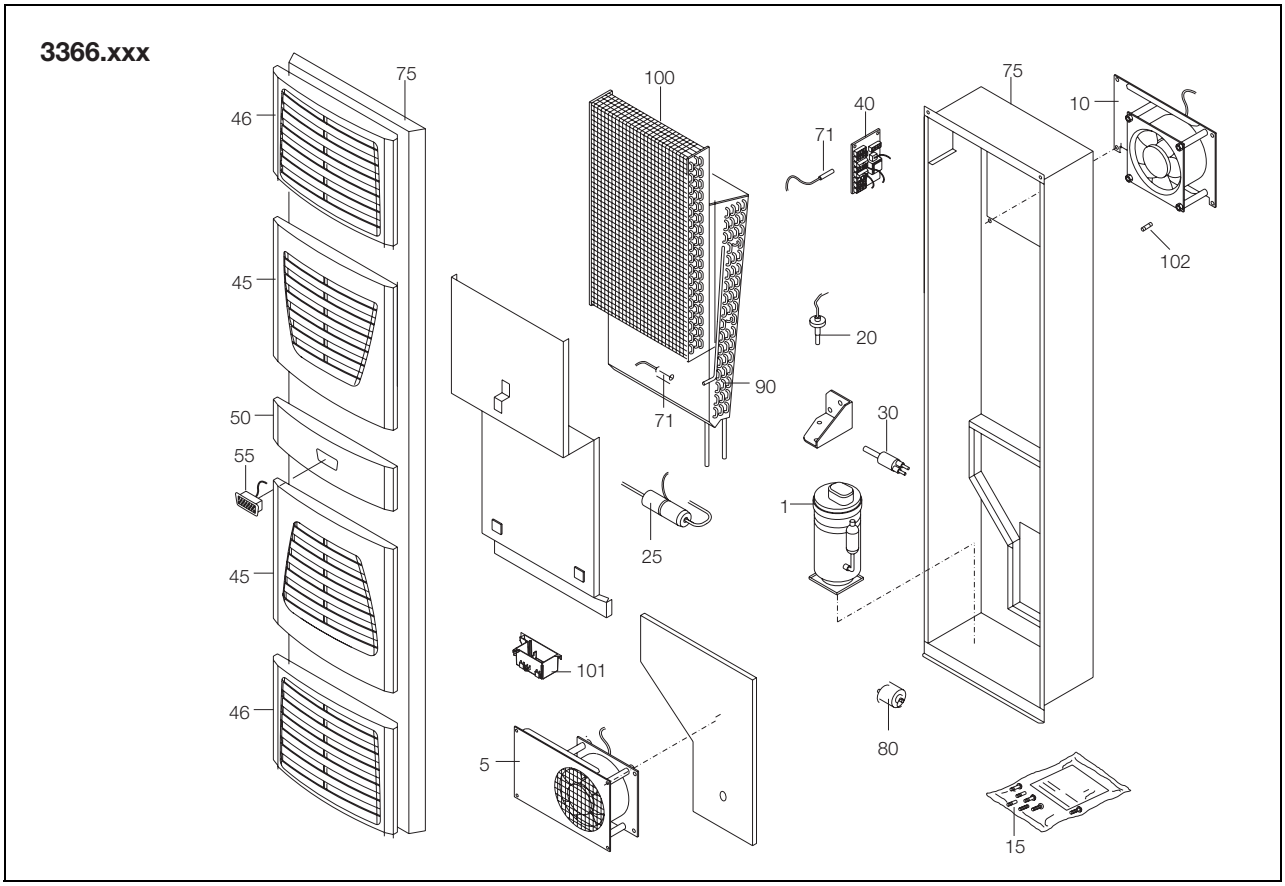

Fig. 90: Spare parts for 3366.xxx

Key

1	Compressor
5	Condenser fan
10	Evaporator fan
15	Dispatch bag
20	Expansion valve
25	Filter dryer
30	PSA^{H} pressure switch
40	Controller board
45	Louvred grille 1
46	Louvred grille 2
50	Infill panel
55	Display
71	Temperature sensor
75	Enclosure tray
80	Transformer
90	Evaporator coil
100	Condenser
101	Condensate evaporator
102	Miniature fuse, condensate evaporator (T4A; 6.3 x 32 mm)

Note:
As well as the spare part number, when ordering spare parts the following information must be provided:
– Unit model
– Fabrication number
– Date of manufacture
This information may be found on the rating plate.

11 Appendix

11.1 Cut-out and hole sizes

11.1.1 Dimensions for external mounting

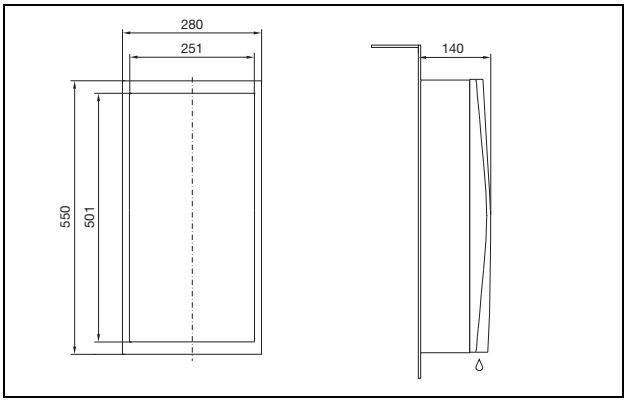

Fig. 91: 3302.xxx external mounting (except 3302.3xx)

EN

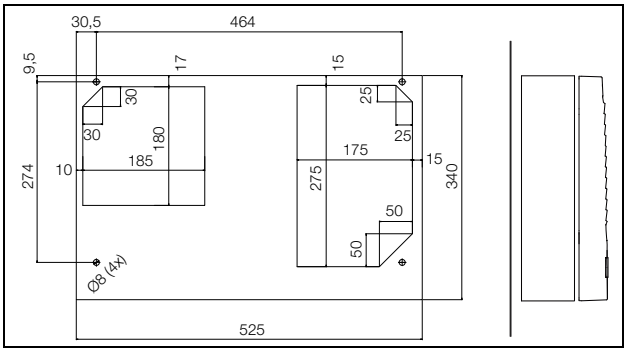

Fig. 92: 3302.3xx external mounting

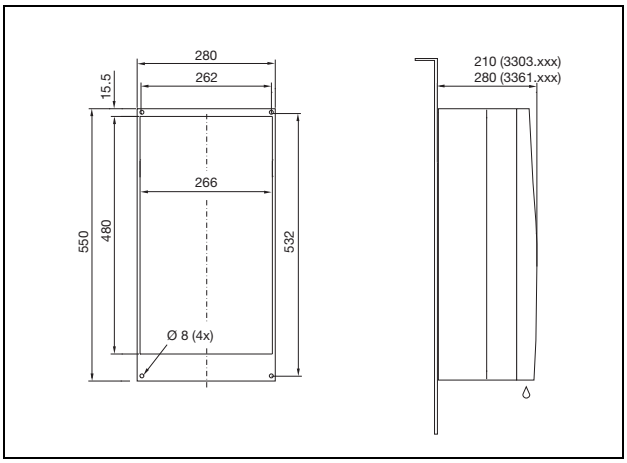

Fig. 93: 3303.xxx, 3361.xxx external mounting (except NEMA 4X devices)

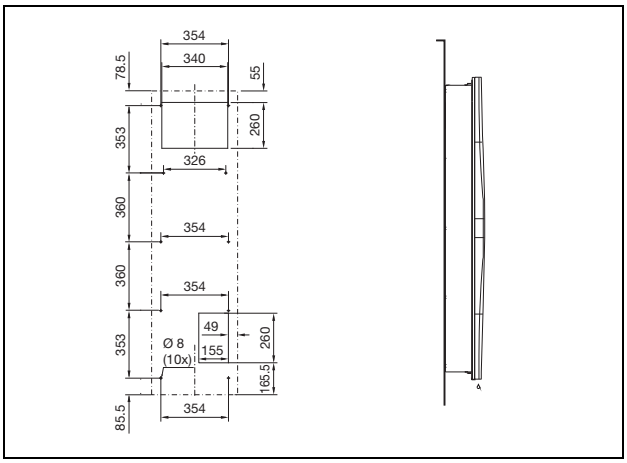

Fig. 94: 3366.xxx external mounting

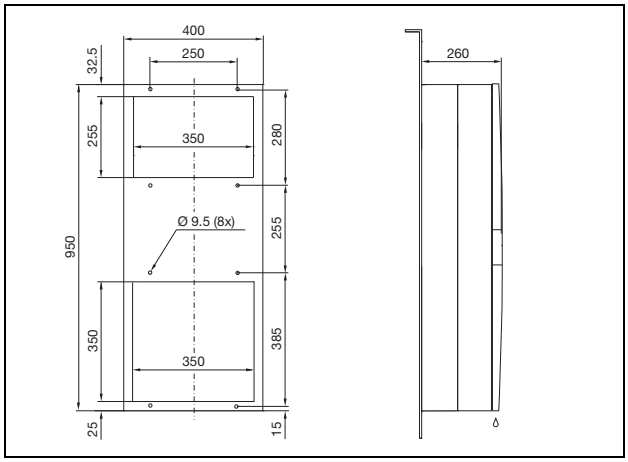

Fig. 95: 3304.xxx, 3305.xxx external mounting (except NEMA 4X devices)

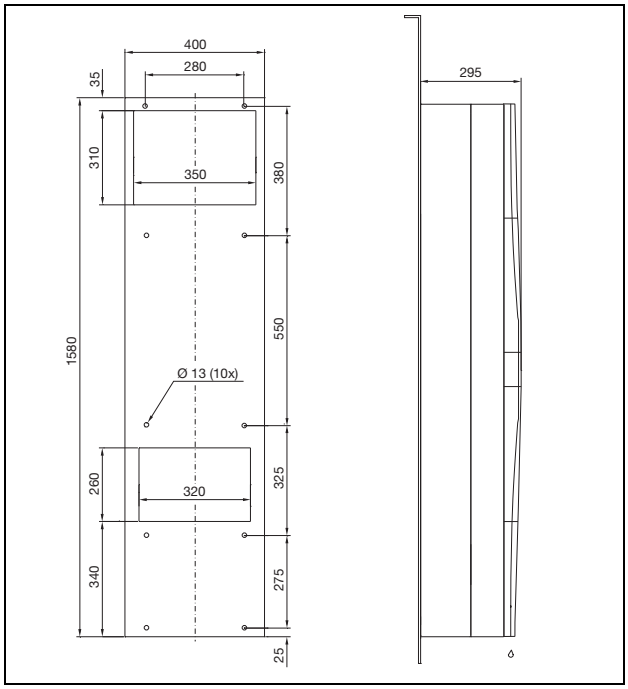

Fig. 96: 3328.xxx, 3329.xxx external mounting (except NEMA 4X devices)

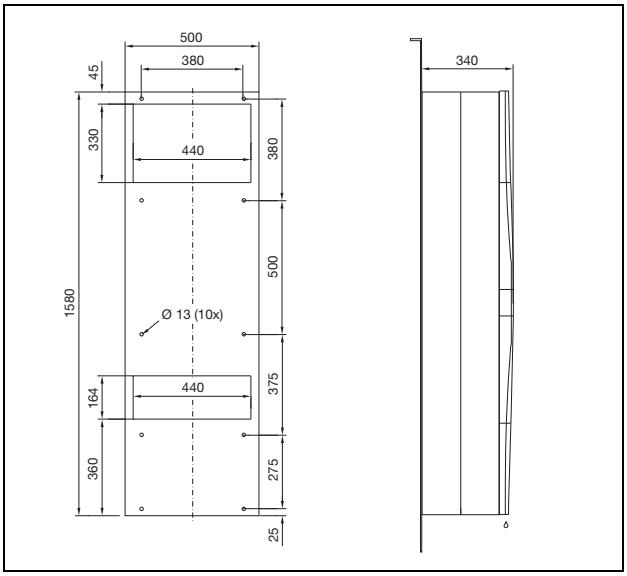

Fig. 97: 3332.xxx external mounting

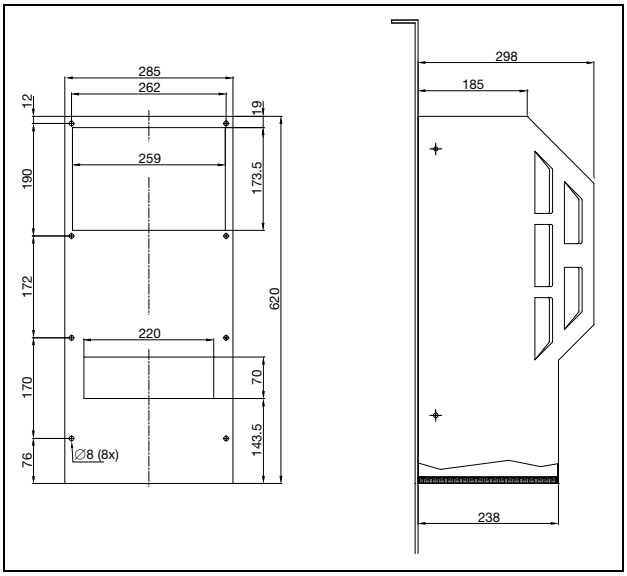

Fig. 98: 3303.xx4

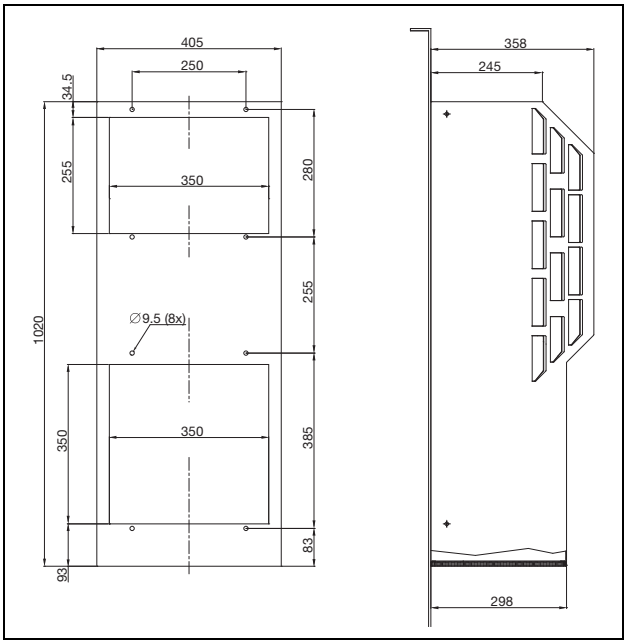

Fig. 99: 3304-5.5x4

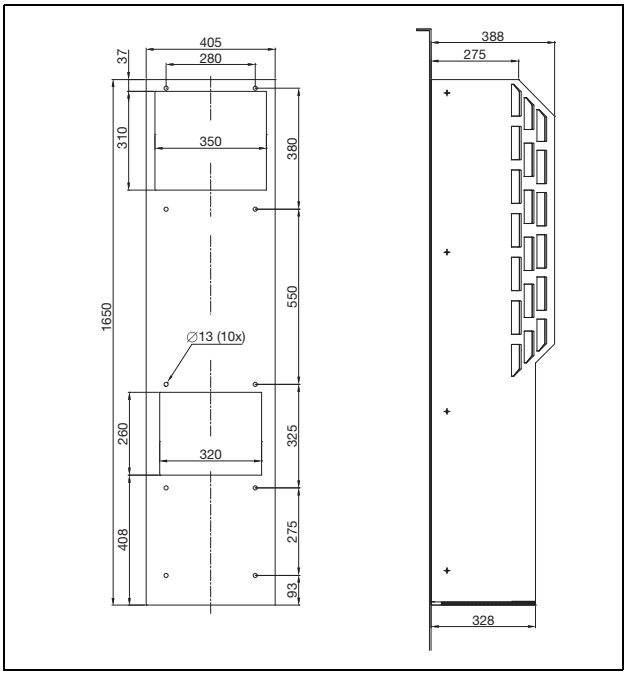

Fig. 100: 3328-29.5x4

EN

11.1.2 Dimensions for partial internal mounting

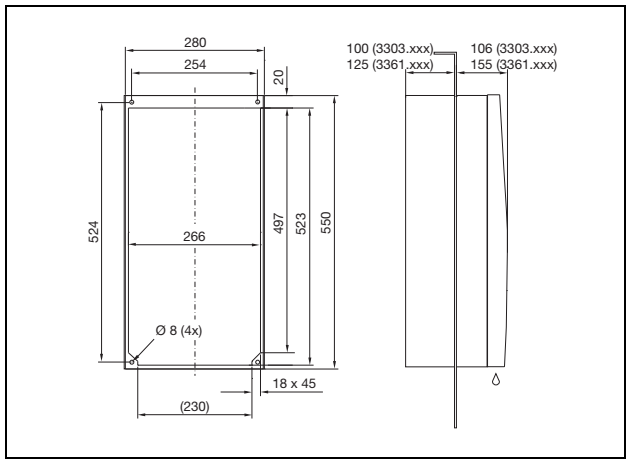

Fig. 101: 3303.xxx, 3361.xxx partial internal mounting

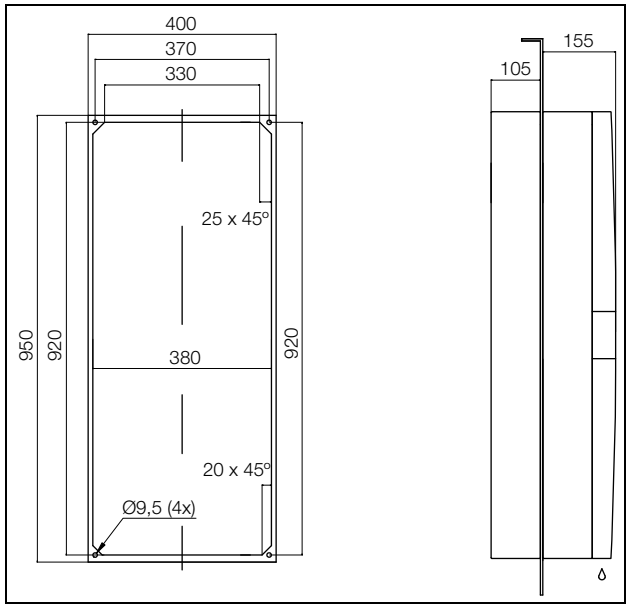

Fig. 102: 3304.xxx, 3305.xxx partial internal mounting

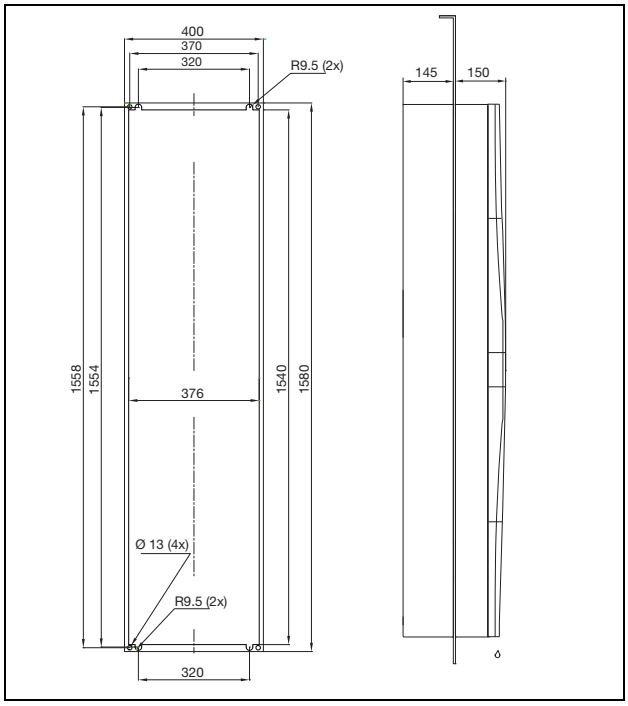

Fig. 103: 3328.xxx, 3329.xxx partial internal mounting

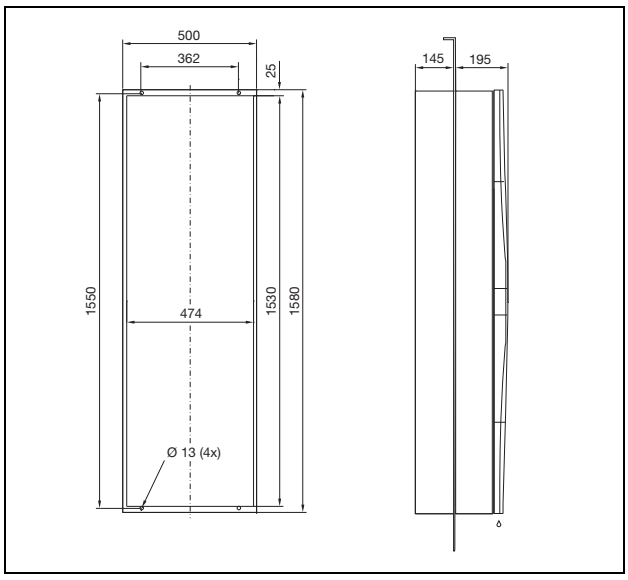

Fig. 104: 3332.xxx partial internal mounting

11.1.3 Dimensions for full internal mounting

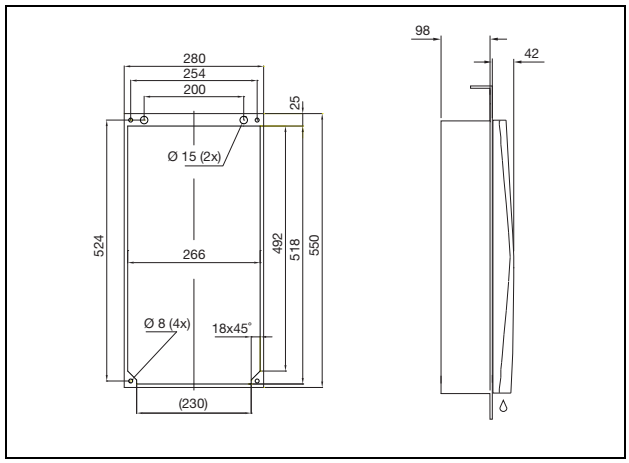

Fig. 105: 3302.xxx full internal mounting (except 3302.3xx)

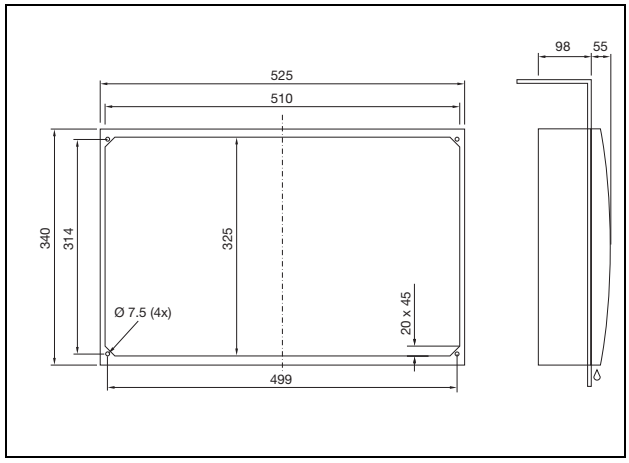

Fig. 106: 3302.3xx full internal mounting

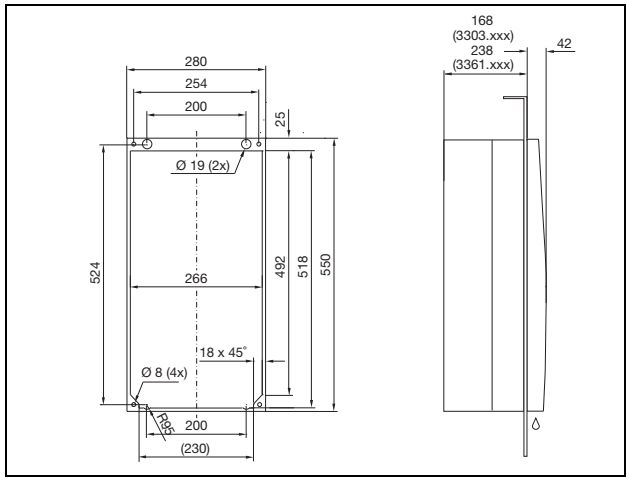

Fig. 107: 3303.xxx, 3361.xxx full internal mounting

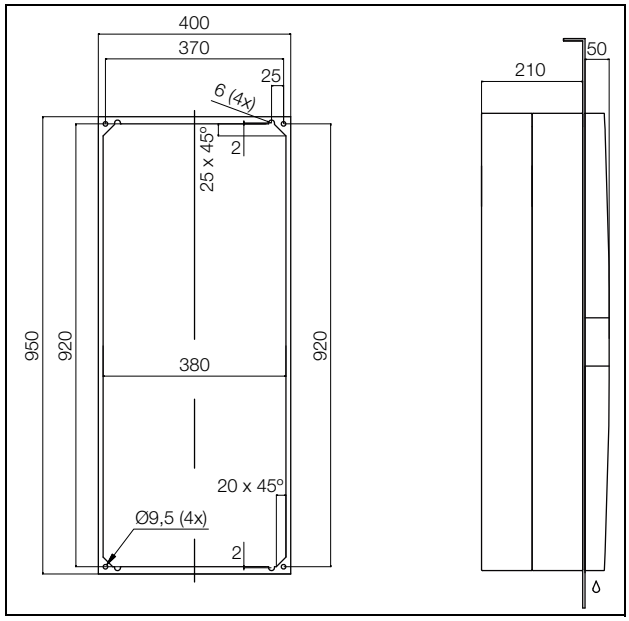

Fig. 108: 3304.xxx, 3305.xxx full internal mounting

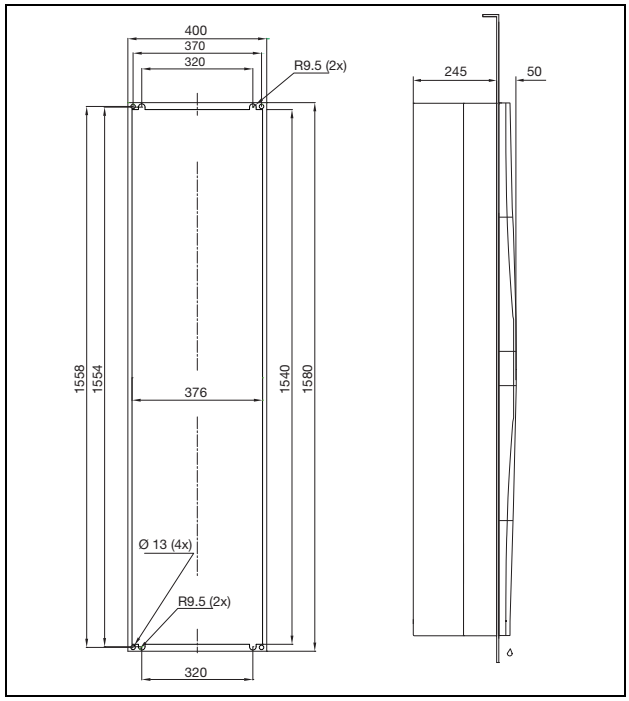

Fig. 109: 3328.xxx, 3329.xxx full internal mounting

EN

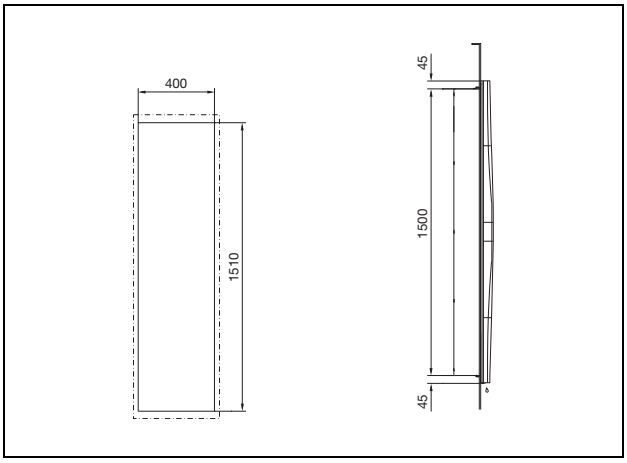

Fig. 110: 3366.xxx full internal mounting

11.2 Electrical wiring plan

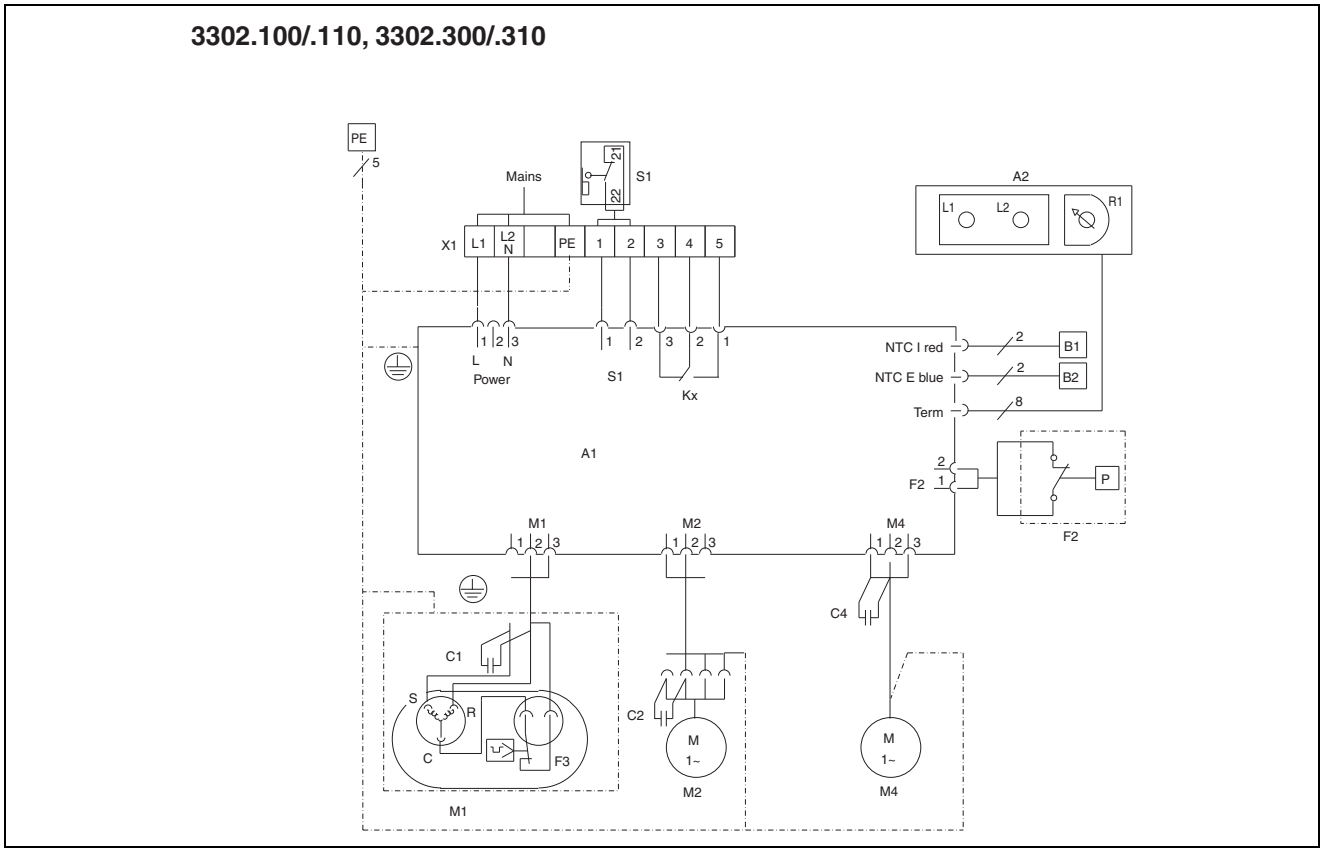

Fig. 111: Electrical wiring plan no. 1

EN

3303.500/.510, 3303.600/.610, 3361.500/.510, 3361.600/.610

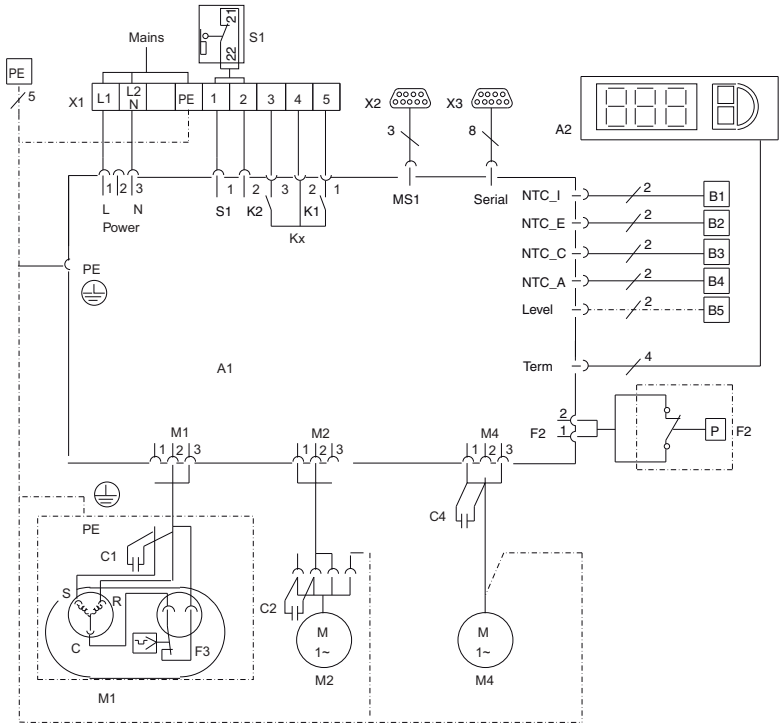

Fig. 112: Electrical wiring plan no. 2

3361.540/.640

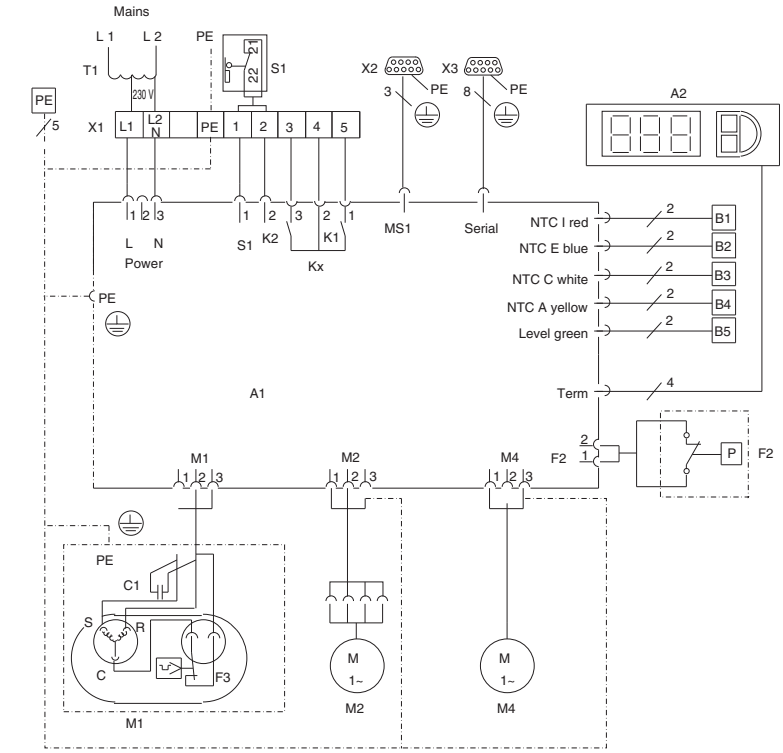

Fig. 113: Electrical wiring plan no. 3

EN

3304.500/.600/.510/.520/.504/.514/.610

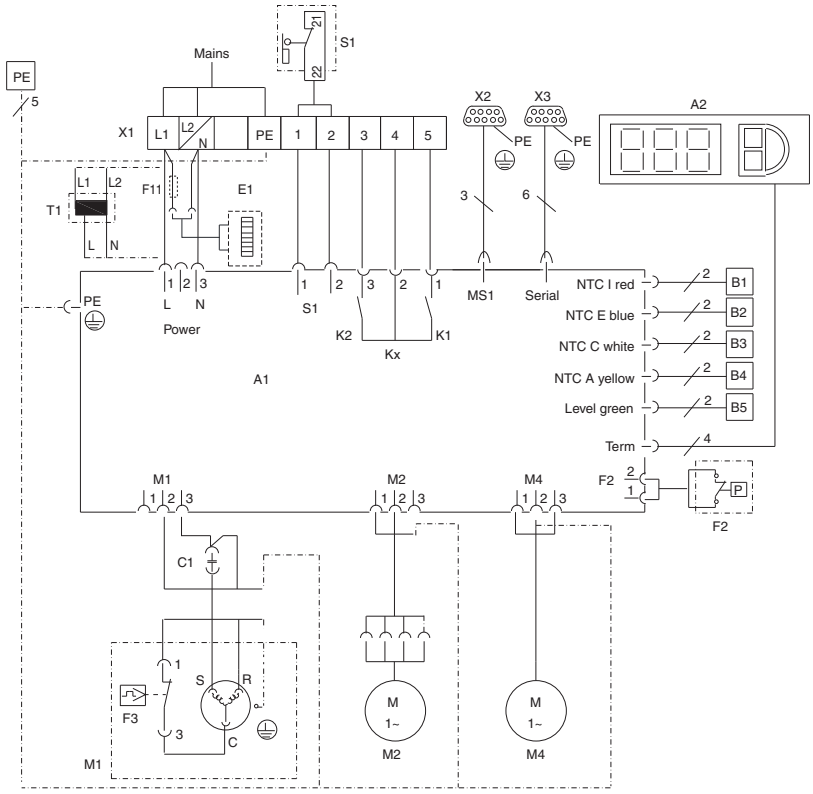

Fig. 114: Electrical wiring plan no. 4

3305.500/.510/.504/.514/.520, 3328.500/.510/.504/.514/.520, 3329.500/.510/.504/.514/.520, 3305.600/.610, 3328.600/.610, 3329.600/.610

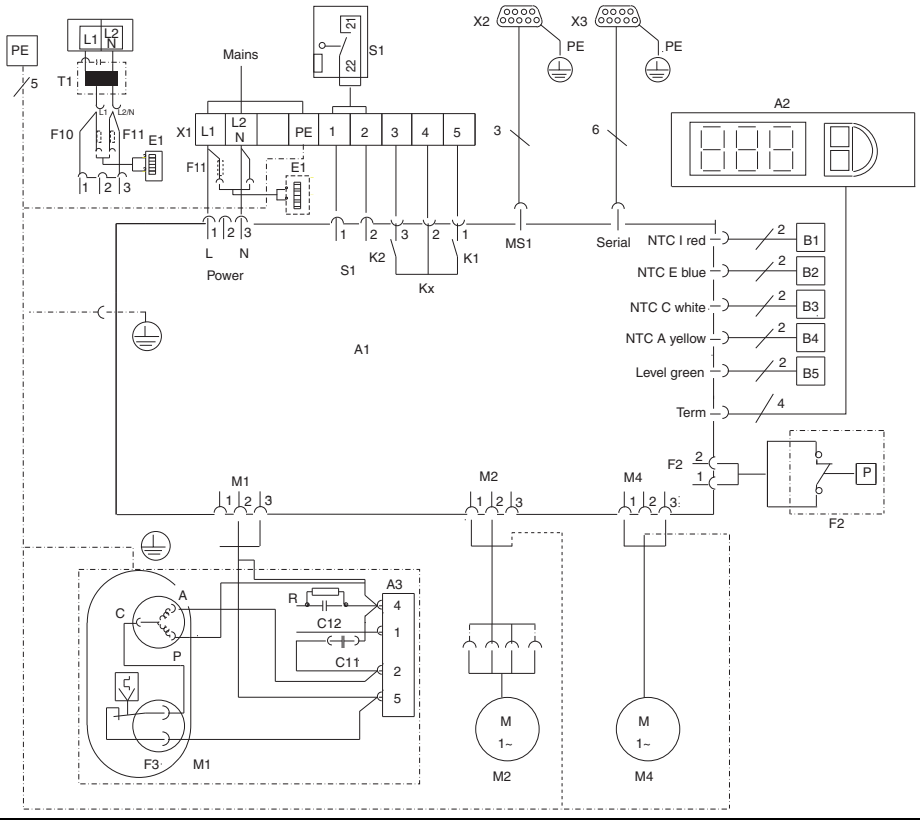

Fig. 115: Electrical wiring plan no. 5

EN

3304.540, 3304.544, 3305.540, 3305.544, 3328.540/.544, 3329.540/.544, 3304.640, 3305.640, 3328.640, 3329.640, 3366.540, 3366.640

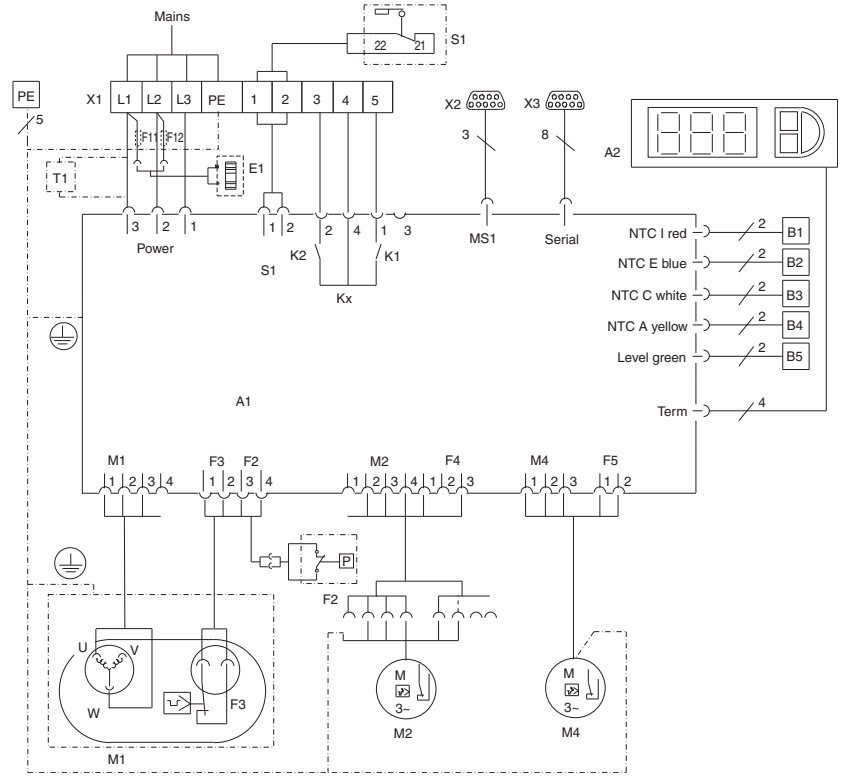

Fig. 116: Electrical wiring plan no. 6

3366.500/.510/.600/.610

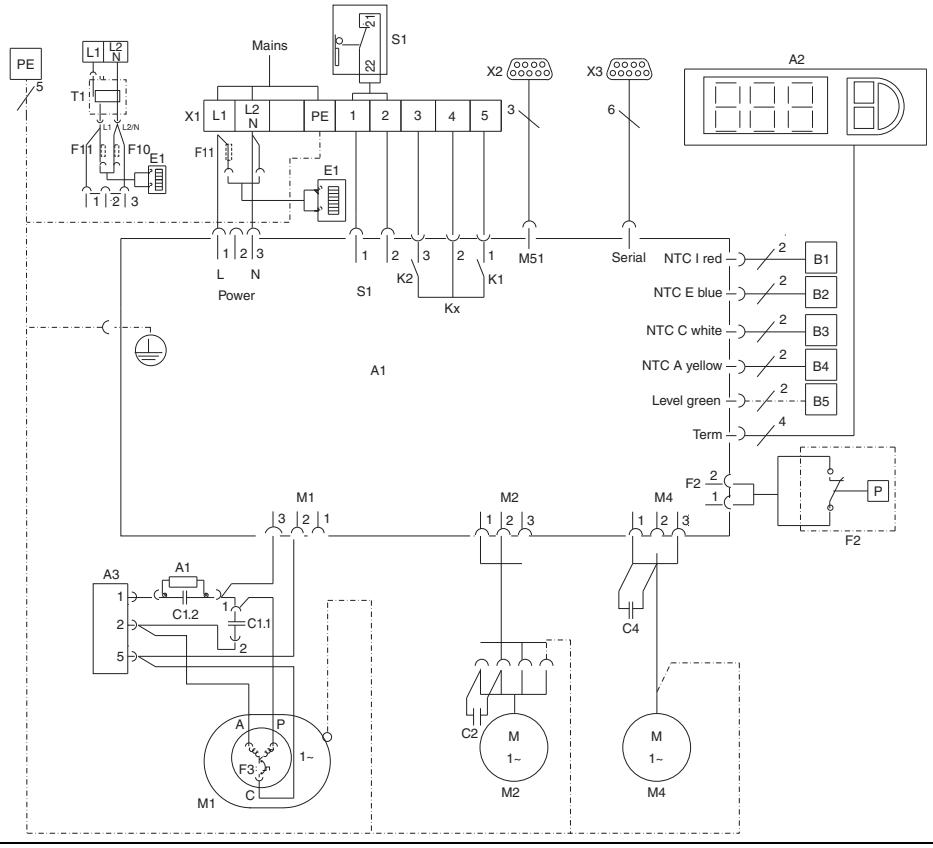

Fig. 117: Electrical wiring plan no. 7

EN

3332.540/.640

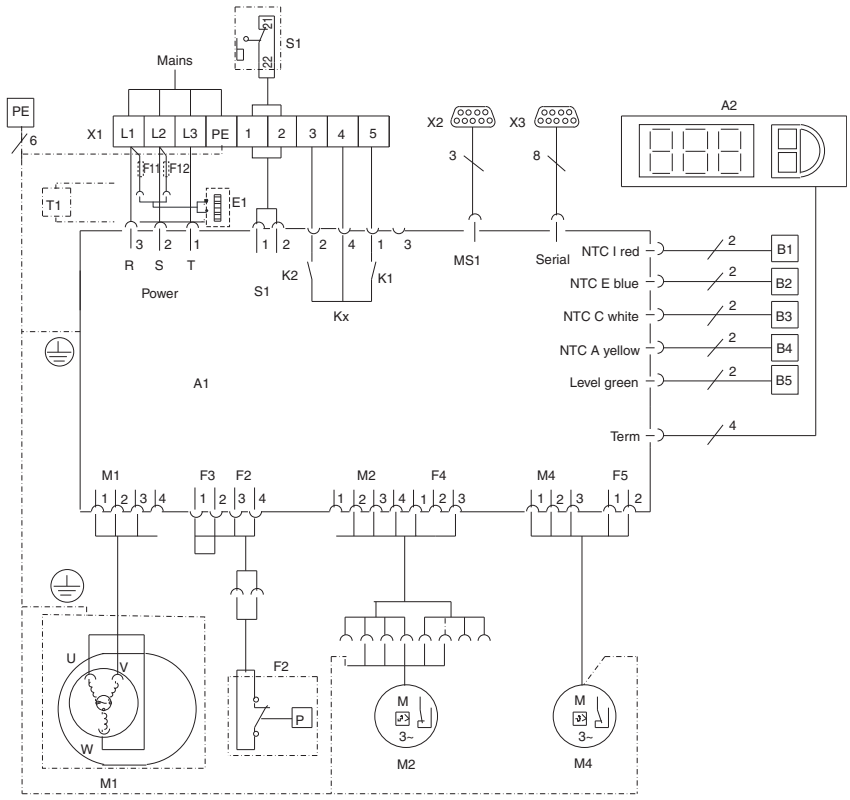

Fig. 118: Electrical wiring plan no. 8

Key

A1	Power PCB
A2	Display terminal
A3	Starter relay and RC element
B1	Temperature sensor, internal temperature
B2	Icing hazard temperature sensor
B3	Condenser temperature sensor
B4	Ambient temperature sensor
B5	Condensate warning sensor (optional)
C1.2	Start-up capacitor
C1.1, C2, C4	Operating capacitors
E1	Condensate evaporator
F2	PSA^H pressure switch (3302.1x0 has bridge instead of pressostat)
F3	Compressor thermal contact
F11/F12	Miniature fuses, condensate evaporator
K1	Relay collective fault 1
K2	Relay collective fault 2
L1	LED operational green
L2	LED alarm red
M1	Compressor
M2	Condenser fan
M4	Evaporator fan
R1	Potentiometer for setting the temperature
S1	Door limit switch (without door limit switch: terminal 1, 2 open)
T1	Transformer (optional)
X1	Main terminal strip
X2	Master/slave connection
X3	Optional interface

Rittal – The System.

Faster – better – everywhere.

- Enclosures
- Power Distribution
- Climate Control
- IT Infrastructure
- Software & Services

3rd edition 08.2017 / ID no. 328 124 / Document no. D-0000-00001248-02.PDF

You can find the contact details of all
Rittal companies throughout the world here.

www.rittal.com/contact

RITTAL GmbH & Co. KG
Postfach 1662 · D-35726 Herborn
Phone +49(0)2772 505-0 · Fax +49(0)2772 505-2319
E-mail: info@rittal.de · www.rittal.com