Self-aligning ball bearings

2202-2RS-TVH (Series 22..-2RS)

main dimensions to DIN 630, lip seals on both sides

The datasheet is only an overview of dimensions and basic load ratings of the selected product. Please always observe all the guidelines in these overview pages. Further information is given on many products under the menu item "Description". You can also order comprehensive information via the Catalogue selection system (http://www.fag.de/content.fag.de/en/mediathek/library/library.jsp) or by telephone on +49 (91 32) 82 - 28 97.

d	15	mm	
D	35	mm	
B	14	mm	
D_2	30,2	mm	
d_2	19	mm	
$D_{a\ max}$	30,8	mm	
$d_{a\ min}$	19,2	mm	
$r_{a\ max}$	0,6	mm	
r_{min}	0,6	mm	
m	0,061	kg	Mass
C_r	7700	N	Basic dynamic load rating, radial
e	0,34		
Y_1	1,86		
Y_2	2,88		
C_{0r}	1730	N	Basic static load rating, radial
Y_0	1,95		
n_G	13300	1/min	Limiting speed
C_{ur}	108	N	Fatigue limit load, radial

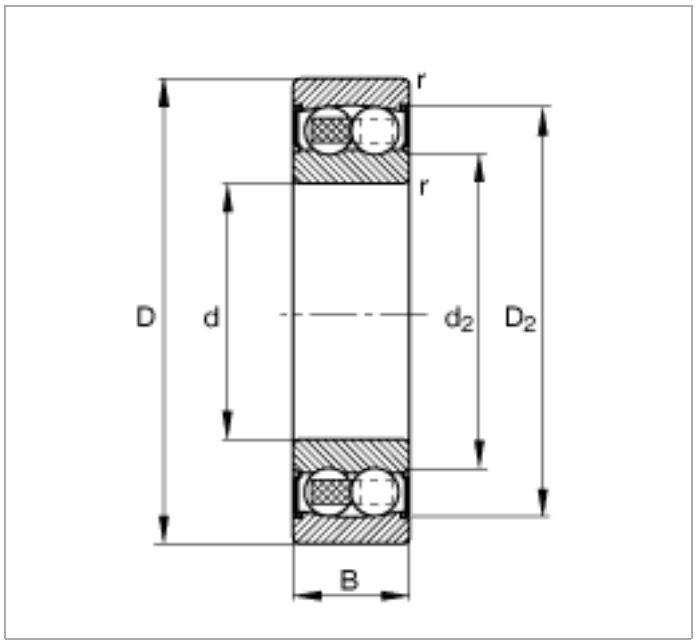
r
r
D
d
d_2
D_2
B

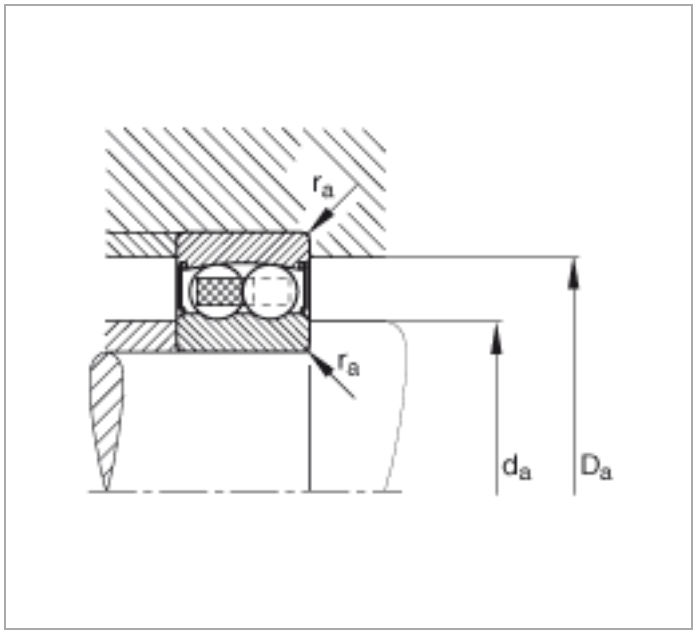
r_a
r_a
d_a
D_a