PXS24... system



Powering Business Worldwide

Inhaltsverzeichnis

1 Summary of the manual 4
2 Type overview....5
2.1 Electronic circuit breakers 5
2.2 Accessories 5
2.3 Standard....6
2.4 Economy 6
2.5 Temperature rise in case of modules >13 A....6
2.6 PXS24 with feed-in terminals....6
3 Applications 7
3.1 Using the PXS24 as an electronic protection device 7
3.1.1 Active current limitation 7
3.2 Using the PXS24 as a protective relay 7
3.2.1 Table indicating the PXS24 service life if used as a relay 7
4 Technical data 8
4.1 9
5 Terminals....10
5.1 Connection via push-in cage clamp terminals 10
5.2 Busbar connection 11
5.2.1 Busbar without PXS24-IT feed-in terminal 11
5.2.2 Busbar with a PXS24-IT or AKI16/10 feed-in terminal 11
5.2.3 Busbar cover 11
5.2.4 Placeholder modules....12
5.3 Connection examples 12
5.3.1 Feed-in via a single power supply unit with <= 20 A 12
5.3.2 Feed-in via a single power supply unit with 20 A to 40 A 13
5.3.3 Feed-in via two power supply units....14
6 The various circuit breaker elements 15
6.1 PXS24 LED 15
6.2 PXS24 switch 15
7 Communication interface 15
7.1 Inputs....16
7.1.1 Input voltage levels 16
7.1.2 Internal wiring of the inputs 16
7.2 Outputs....16
7.2.1 Output voltage levels 16
7.2.2 Output current carrying capacity 16
7.2.3 Ground connection....16

7.3 Logic table 17
7.4 Off command priority 17
7.5 Circuit examples 17
7.5.1 External switching – signal path 18
7.5.2 External reset – signal path 18
7.5.3 Status monitoring via an external controller 19
7.5.4 Switching via an external controller 19
7.5.5 Full control via an external controller (monitoring and switching) 19
7.5.6 Reset with pushbutton – power supply via the PXS24 20
7.5.7 Reset with pushbutton or relay – power supply via external voltage 20
7.5.8 Overcurrent indication via signal element 20
7.5.9 Overcurrent status transfer via relay 21
7.5.10 Time-delayed overcurrent status transfer via time relay 21
7.5.11 Reset with pushbutton and overcurrent indication via signal element, relay & time relay 21
7.5.12 Connecting multiple PXS devices 22
7.5.13 Group error message - group connection of several PXS24s (monitoring and switching) 22
7.5.14 Sequence control 23

1 Summary of the manual

This manual describes the interaction of the various PXS24 components. This document also discusses accessories such as busbars, input terminals, etc.

In addition, it also describes the stand-alone operation of the device.

Grayed out fields apply to the Standard version only and not to the Economy modules.
Up-to-date information and the most recent version of this document are available at

Eaton.com/PXS24

We recommend downloading the latest versions of all relevant documents prior to planning.

2 Type overview

2.1 Electronic circuit breakers

Designation	Communication port	Rated current	Supply terminals	Article no.	Series
PXS24E-e2/F	-	2 A	-	PXS24E02A002	Economy
PXS24E-e4/F	-	4 A	-	PXS24E04A002	Economy
PXS24E-e6/F	-	6 A	-	PXS24E06A002	Economy
PXS24E-e8/F	-	8 A	-	PXS24E08A002	Economy
PXS24E-e10/F	-	10 A	-	PXS24E10A002	Economy
PXS24E-e2/F-IT	-	2 A	✓	PXS24E02A001	Economy
PXS24E-e4/F-IT	-	4 A	✓	PXS24E04A001	Economy
PXS24E-e6/F-IT	-	6 A	✓	PXS24E06A001	Economy
PXS24E-e8/F-IT	-	8 A	✓	PXS24E08A001	Economy
PXS24E-e10/F-IT	-	10 A	✓	PXS24E10A001	Economy
PXS24S-e2/F/ORT-IT	✓	2 A	✓	PXS24S02A001	Standard
PXS24S-e4/F/ORT-IT	✓	4 A	✓	PXS24S04A001	Standard
PXS24S-e6/F/ORT-IT	✓	6 A	✓	PXS24S06A001	Standard
PXS24S-e8/F/ORT-IT	✓	8 A	✓	PXS24S08A001	Standard
PXS24S-e10/F/ORT-IT	✓	10 A	✓	PXS24S10A001	Standard
PXS24S-e13/F/ORT-IT	✓	13 A	✓	PXS24S13A001	Standard
PXS24S-e16/F/ORT-IT	✓	16 A	✓	PXS24S16A001	Standard
PXS24S-e2/F/ORT	✓	2 A	-	PXS24S02A002	Standard
PXS24S-e4/F/ORT	✓	4 A	-	PXS24S04A002	Standard
PXS24S-e6/F/ORT	✓	6 A	-	PXS24S06A002	Standard
PXS24S-e8/F/ORT	✓	8 A	-	PXS24S08A002	Standard
PXS24S-e10/F/ORT	✓	10 A	-	PXS24S10A002	Standard
PXS24S-e13/F/ORT	✓	13 A	-	PXS24S13A002	Standard
PXS24S-e16/F/ORT	✓	16 A	-	PXS24S16A002	Standard

2.2 Accessories

Designation	Description	Article no.	Series
PXS24-PCH	Blank module	PXS24ACC0000	Accessories
PXS24-IT	Feed-in terminal	PXS24ACC0001	Accessories
AKI16/10	Feed-in terminal, isolated	Y7-184515	Accessories
PXS24-BB/80A/1m	Busbar 1 m	PXS24BB00001	Accessories
PXS24-BB/80A/4TE	Busbar 4 MU	PXS24BB00004	Accessories
PXS24-BB/80A/8TE	Busbar 8 MU	PXS24BB00008	Accessories
PXS24-BB/80A/12TE	Busbar 12 MU	PXS24BB00012	Accessories
PXS24-BBC	Busbar cover	PXS24ACC0002	Accessories

2.3 Standard

The Standard version of the PXS24 module offers the perfect combination of protection and connectivity.
All Standard modules are equipped with a communication interface.
The Standard modules are available with a fixed rated current of up to 16 A.
The communication interface offers the following advantages:

- Sequence control (see “Communication interface – Sequence control”)
- Digital outputs (see “Communication interface – Outputs”)
- Digital inputs (see “Communication interface – Inputs”)
- The option to use the device as a protective relay (see “Applications – Using the PXS24 as a protective relay”)

2.4 Economy

The devices of the Economy series do not have a communication interface. They are designed for applications where no overload protection status messages are required.

2.5 Temperature rise in case of modules >13 A

In order to protect the individual modules from the thermal effects of the adjacent modules, we recommend placing a module with a rated current >13 A next to a module with a rated current <13 A wherever possible.

Derating: If three or more modules rated 16 A are placed directly next to each other (in the specified temperature range), these must be derated to 13 A.

2.6 PXS24 with feed-in terminals

Active modules with the additional designation “IT” are equipped with feed-in terminals and can thus supply power to the busbar. A maximum current of 20 A may be supplied per module.

Modules without the additional designation “IT” are not equipped with feed-in terminals and can therefore only be supplied via the busbar.

3 Applications

3.1 Using the PXS24 as an electronic protection device

All PXS24 modules (Economy or Standard) can be used as electronic protection devices.
In the event of an overcurrent (short circuit or overload) the PXS24 does not switch off immediately. Instead, it will actively limit the overcurrent first and will only de-energize the load side after the switch-off time has been exceeded. This ensures that system-related overcurrents (charging of capacitors, inrush current when starting a motor, etc.) do not cause nuisance tripping.

3.1.1 Active current limitation

If the residual current exceeds the rated current by a factor of 1.3, the PXS24 will limit the applied residual current to 1.25 times the rated current.
The PXS24 will switch off after the switch-off time has elapsed.

Rated current I_N	Switch-off time (typically)	Active current limitation
2 A	470 ms	1.25 x I_N
4 A	280 ms	1.25 x I_N
6 A	170 ms	1.25 x I_N
8 A	110 ms	1.25 x I_N
10 A	90 ms	1.25 x I_N
13 A	80 ms	1.25 x I_N
16 A	70 ms	1.25 x I_N

Grayed out data apply only to the Standard series, not to Economy

3.2 Using the PXS24 as a protective relay

The Standard PXS24 devices can also be used as protective relays. The PXS24 can be controlled via the digital inputs, so that loads or function groups can be switched on and off.

3.2.1 Table indicating the PXS24 service life if used as a relay

Rated current I_N	Service life if used as a relay t_{on} = 0.05 s / t_{off} = 10 s
2 A	>10,000,000
4 A	>10,000,000
6 A	>10,000,000
8 A	400,000
10 A	10,000
13 A	Not used as a relay - protection only
16 A	Not used as a relay - protection only

4 Technical data

Variable	Economy	Standard
Marking	CE	
Certification	UL508 + UL2367 (sections 10 and 12)	
Product standard	The applicable parts of: EN60947-1, EN60947-5-1, EN61009-1, EN61131-2 and EN61000-4-2 For details see factory standard WN 1008	
Electrical:		
Operating voltage U_b	24 V DC (16... 30 V DC)	
Rated current I_N	Fixed; 2, 4, 6, 8, 10 A	Fixed; 2, 4, 6, 8, 10, 13, 16 A
Disconnection of overload and short circuit currents	Typically 1.3 x I_N, with active current limitation to 1.25 x I_N	
Switch-off times for electronic switch-off	See the time/current table (3.1.1)	
Capacitive loads	Up to 20,000 µF	
Inductive loads	$I_n \leq 6$ A ... $\tau_{max} \leq 60$ ms 6 A < $I_n \leq 10$ A ... $\tau_{max} \leq 12$ ms	In ≤ 6 A ... τmax ≤ 60 ms 6 A < In ≤ 10 A ... τmax ≤ 12 ms 10 A < In ≤ 16 A ... τmax ≤ 7.5 ms
Service life if used as a relay	Not available	See the lifetime table (3.2.1)

Mechanical:		
Number of channels	1	
Width	17.5 mm (1 MU)	
Height	92.5 mm	
Depth	119.2 mm	
Feed-in terminals (optional)	3 x LINE (+) and 3 x GND (-)	
Output terminals	3 x LOAD (+) and 3 x GND (-)	
Terminal type	Push-in terminals	
Terminal capacity of load inputs and load outputs	0.5-2.5 mm² (flexible with ferrule) 0.5-4 mm² (rigid)	
Communication port	Not available	2 x communication output (internally linked) 2 x communication input (internally linked) 1 x GND
Terminal type of the communication port	Not available	Push-in terminals
Terminal capacity of the communication port	Not available	1 mm² (flexible with ferrule) 1.5 mm² (rigid)
Busbar system	LINE (+) and GND (-); max. 80 A Different lengths up to 1 m	
Assembly	Snap-fit onto a TH35 mounting rail (EN 60715)	
Status LED	Two-colored; green = OK; red = tripped Off = channel not in operation	
Slider	On/off/reset	
Remote signaling output Trip indicator	Not available	According to IEC 61131-2; Max. current load 200 mA; Max. 30 PXS24 units can be connected simultaneously
Remote signaling input On Off Reset	Not available	According to IEC 61131-2; Max. 30 PXS24 units can be connected simultaneously
Sequence control	Not available	Via the communication port
Text field	17.5 x 6 mm	
Degree of protection	IP20	
Ambient temperature	-30 °C to 55 °C	
Storage temperature	-40 °C to 100 °C	
Humidity	96h/95% relative humidity at 40 °C as per IEC 600068-2-78 (non-condensing)	

5 Terminals

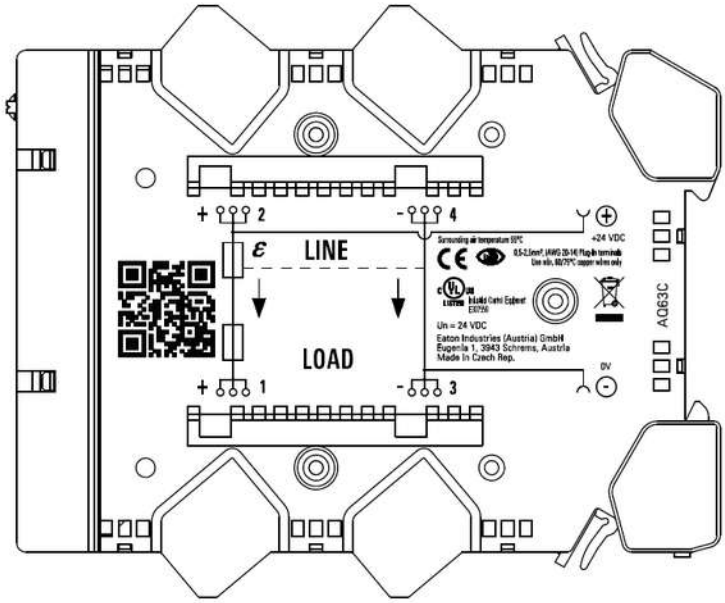

Terminal type	Terminal marking
Protected output load + 24 V DC	1.1, 1.2, 1.3
Power supply + 24 V DC	2.1, 2.2, 2.3
Protected output load - GND	3.1, 3.2, 3.3
Power supply - GND	4.1, 4.2, 4.3

Supply terminals 2.X and 4.are not available in the case of switches without the designation “IT”.

5.1 Connection via push-in cage clamp terminals

The maximum conductor cross-section of the push-in cage clamp terminals is 2.5 mm² for flexible connecting cables (with or without ferrule) and 4 mm² for rigid connecting cables.
The minimum conductor cross-section is 0.5 mm².
Only suitable tools may be used to actuate the cage clamp terminals (e.g. a slotted screwdriver with a blade size of 2.5 x 0.75 mm).

The length of the pin (P) must not be less than 10 mm in the case of ferrules, otherwise it cannot be ensured that the ferrule will be securely clamped in the terminal.

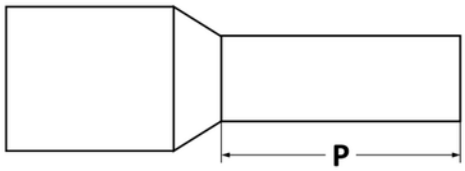

5.2 Busbar connection

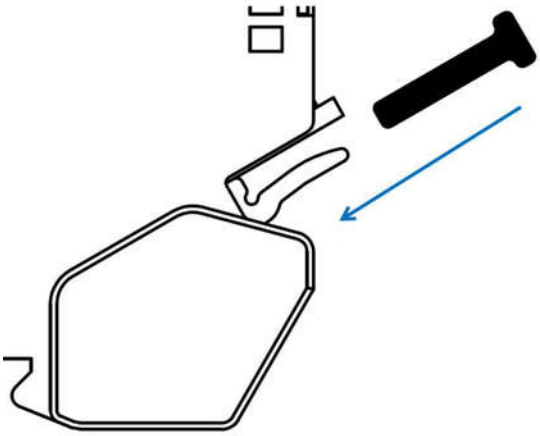

The PXS24-BB... busbar is designed for currents up to 80 A.

Assembly:

1.) Position the module correctly on the busbar
2.) Shorten the busbar to the desired length using a suitable tool
3.) Push the busbar into the upper (+24 V) and lower (0 V) busbar support.
A force of approximately 15 N is required to press in the busbar.

Disassembly

1.) Push the busbar out of the busbar support by means of an appropriate tool (e.g. a flat screw driver).

5.2.1 Busbar without PXS24-IT feed-in terminal

Active modules with the additional designation “IT” are equipped with feed-in terminals and can thus supply power to the busbar. A maximum current of 20 A may be supplied per module.

Modules without the additional designation “IT” are not equipped with feed-in terminals and can therefore only be supplied via the busbar.

5.2.2 Busbar with a PXS24-IT or AKI16/10 feed-in terminal

For currents above 20 A, power can be supplied either via several modules, via the feed-terminal (PXS24-IT; PXS24ACC0001) or via the isolated feed-in terminal (AKI16/10).

5.2.3 Busbar cover

For applications where it is required that parts carrying low voltages are isolated, Eaton offers the PXS24-BBC cover (PXS24ACC0002).
Once the busbar has been shortened to the correct length, the cover can be connected to the designated busbar clips of the PXS24.

5.2.4 Placeholder modules

To reserve space for later additions, Eaton also offers blank modules that have the same dimensions as live modules:

Article number: PXS24-PCH (PXS24ACC0000)

These can later be replaced with live modules. To make their replacement as simple as possible, Eaton recommends to install the blank modules at either end (on the left or right).

5.3 Connection examples

5.3.1 Feed-in via a single power supply unit with <= 20 A

If a power supply unit ≤ 20 A is used with devices bearing the designation “IT”, power is supplied via the push-in terminals of one of the modules of the PXS24 (terminal marking 2.X and 4.X).

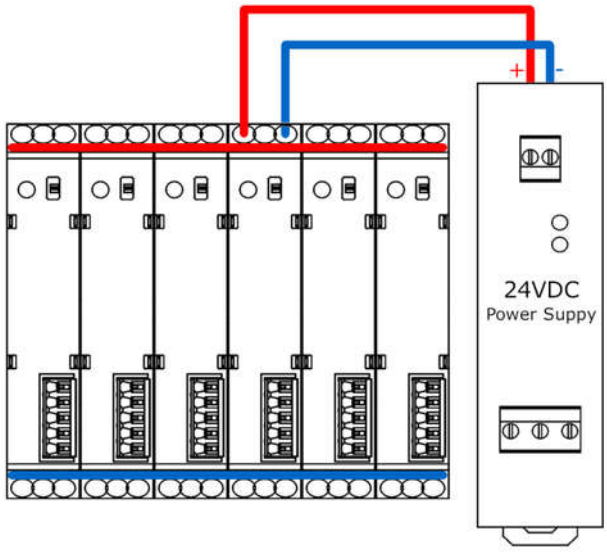

5.3.2 Feed-in via a single power supply unit with 20 A to 40 A

There are two options for supplying power with a current of 20 A to 40 A:

Distributing the power supply via the push-in cage clamp terminals
To distribute the power supply, at least two active modules (module designation ...IT) with supply terminals are required.

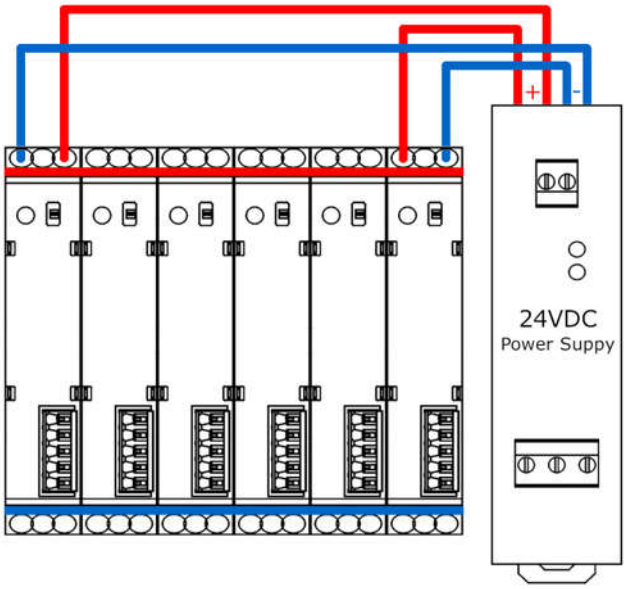

Power supply via the busbar feed-in terminals
The maximum conductor cross-section of the cable connecting the device to the busbar supply terminals is 16 mm².
The busbar is designed for currents up to 80 A.

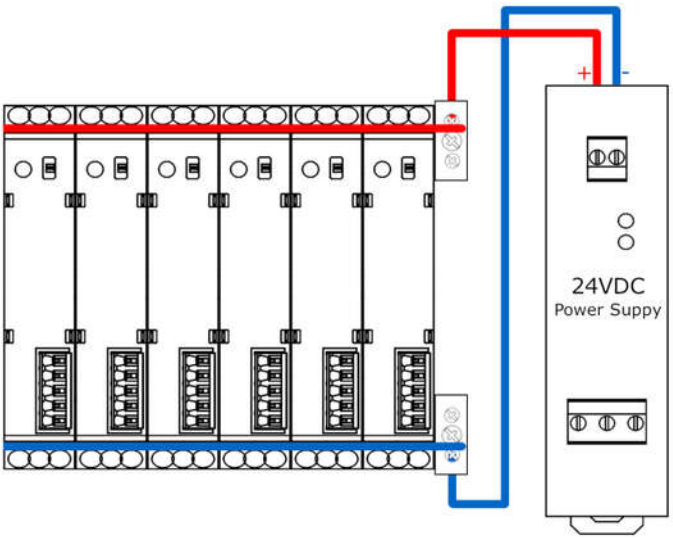

5.3.3 Feed-in via two power supply units

There are two options for power supply using two power supply units:

Feed-in via push-in cage clamp terminals
Two separate power supply units with a maximum current of 20 A each can be connected to the push-in cage clamp terminals.
The busbar is designed for currents up to 80 A.

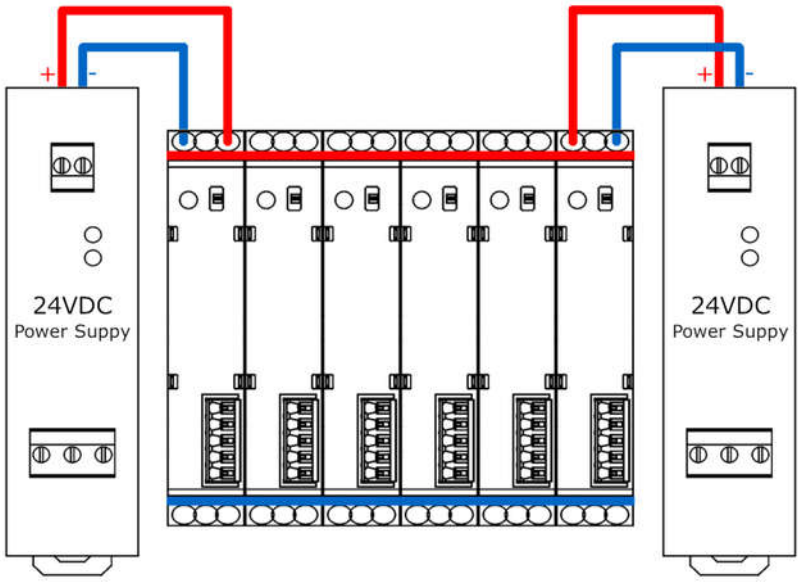

Feed-in via the busbar supply terminals
Two separate active power supply units can be connected to the busbar feed-in terminals.
The combined rated current of the two power supplies must not exceed 80 A.
The busbar is designed for currents up to 80 A.

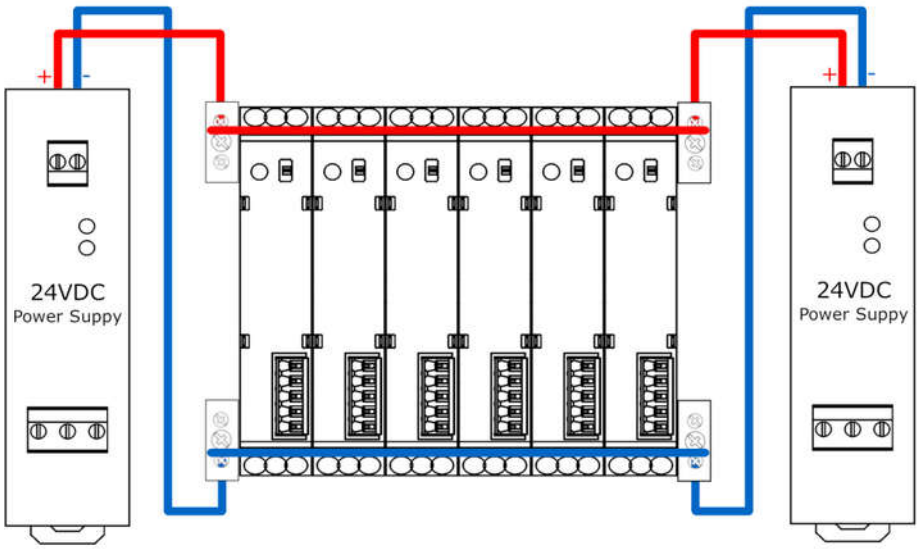

6 The various circuit breaker elements

6.1 PXS24 LED

The status of the switch can be easily checked by means of the LED at the front of the PXS24.
It signals the following states (on /trip/off):

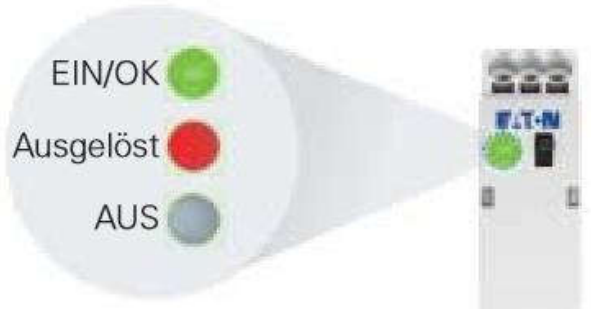

6.2 PXS24 switch

The switch at the front of the PXS24 can be used to switch the device on and off and to reset it.

7 Communication interface



Both the communication port inputs and outputs conform to IEC/EN61131-2 and can therefore be connected directly to a PLC or used to control loads.

The communication interface is designed as a plugable terminal.

7.1 Inputs

The inputs with terminal designations 7 and 8 are used for external control of the PXS24. For more information, please refer to the chapter entitled “Communication interface – remote control.”

7.1.1 Input voltage levels

The voltage at the input must not exceed 30 V DC.

Voltages up to 5 V are recognized as low and voltages above 11 V are recognized as high, provided that the current at the communication port input is not limited.

Signal level LOW: < 5 V
Signal level HIGH: > 11 V

7.1.2 Internal wiring of the inputs

The internal wiring of the module ensures that it is active even if the communication port inputs are not used. Inputs 7 and 8 are linked internally.

7.2 Outputs

The outputs with terminal designations 5 and 6 are used to transmit the trip signal.

7.2.1 Output voltage levels

Outputs 5 and 6 are internally linked and operate with a voltage level of 24 V DC.

7.2.2 Output current carrying capacity

The maximum current carrying capacity of the communication outputs is 200 mA.

If used, the PXS24 outputs must always be protected against voltage peaks by suitable means (surge protection diode, etc.), especially when switching relays.

7.2.3 Ground connection

To enable communication with networks that are not connected to the same power supply, the communication interface is equipped with an additional ground connection.

This ground connection may only be used for communication purposes!

The outputs with terminal designations 5 and 6 are used to transmit the trip signal.

7.3 Logic table

Status of the output terminal (1.1 – 1.3)	Communication port input signal (7 & 8)	Switch position on the module	Communication port output signal (5 & 6)	Output terminal (1.1-1.3)
OK	LOW	OFF	HIGH	Switched off
OK	LOW	ON	LOW	Active
OK	HIGH	OFF	HIGH	Switched off
OK	HIGH	ON	HIGH	Switched off
OK	Nothing is connected	OFF	HIGH	Switched off
OK	Nothing is connected	ON	LOW	Active
Overload	Irrelevant	Irrelevant	HIGH	Switched off

7.4 Off command priority

An “off” command, whether at the switch or at the input of the communication interface, always has priority over an “on” command.

7.5 Circuit examples

Devices from the Standard series can be switched on, off and reset remotely.
This can be done using a variety of controllers or by means of operating elements, such as pushbuttons from Eaton's RMQ series.

If the supply voltages of the controller or pushbutton are connected to a different 24 V DC potential than the PXS24, a ground connection must be established.

In all the circuit examples listed below, the protective devices have been omitted for the sake of simplicity.
If used, the PXS24 outputs must always be protected against voltage peaks by suitable means (surge protection diode, etc.), especially when switching relays.

7.5.1 External switching – signal path

During external switching, the PXS24 will be used as a relay, provided there is no overload on the outputs.

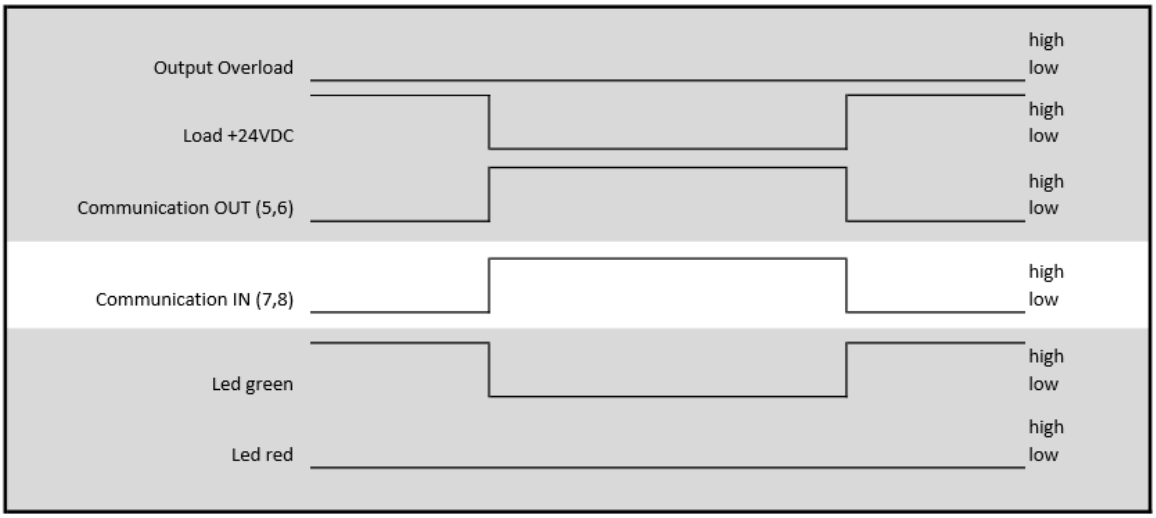

The path highlighted in white can be controlled by the user; the paths highlighted in gray will change in line with the changes to the white path.

7.5.2 External reset – signal path

After the PXS24 has switched off due to an overload, it can be reset remotely.
The applied trigger signal must be at “high” level for at least 200 ms.

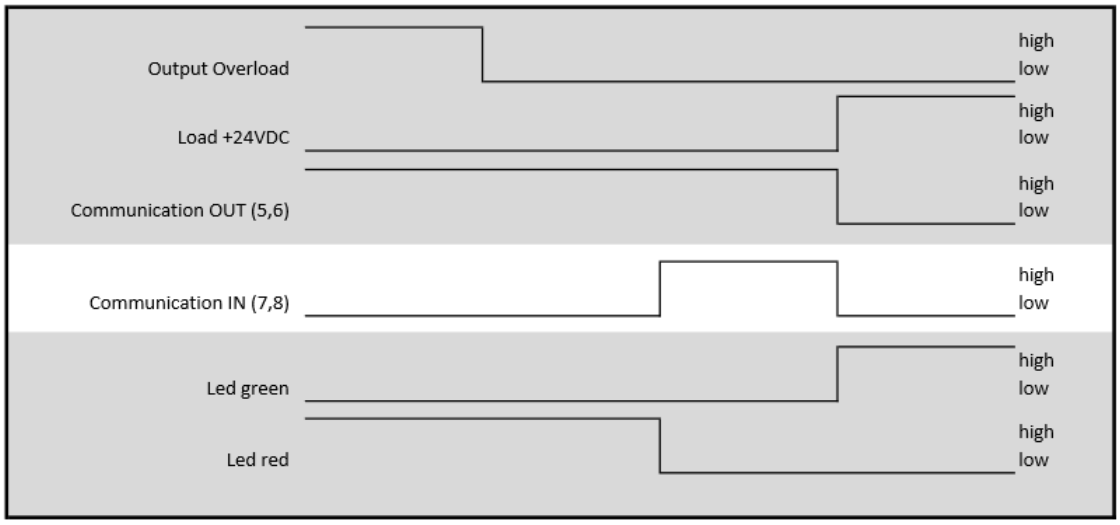

The path highlighted in white can be controlled by the user; the paths highlighted in gray will change in line with the changes to the white path.

7.5.3 Status monitoring via an external controller

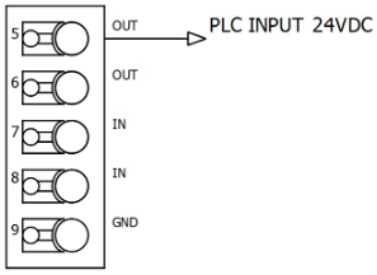

To monitor the status of the PXS24 remotely, one of the PXS24 outputs (pin 5 or 6) can be connected directly to the input of a variety of controllers.

7.5.4 Switching via an external controller

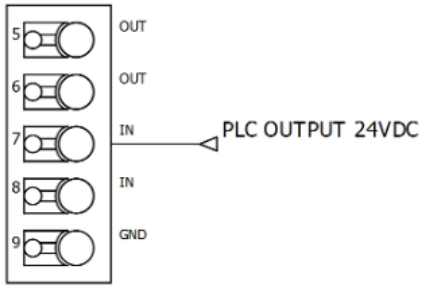

To switch the PXS24 remotely, one of the PXS24 inputs (pin 7 or 8) can be connected directly to a controller output. With this type of connection the PXS24 can also be used as a protective relay.

7.5.5 Full control via an external controller (monitoring and switching)

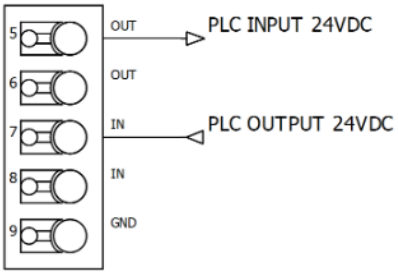

The PXS24 can be fully monitored via a controller if one of its inputs (pin 7 or 8) is connected to a controller output and one of its outputs (pin 5 or 6) is connected to a controller input. With this type of connection the PXS24 can also be used as a protective relay.

7.5.6 Reset with pushbutton – power supply via the PXS24

To be able to reset the PXS24 without an external controller and without any external voltage in the event of a fault, a pushbutton or relay contact (normally open, NO) can be connected between one of its outputs (pin 5 or 6) and one of its inputs (pin 7 or 8).

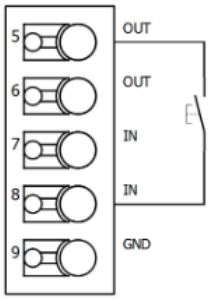

7.5.7 Reset with pushbutton or relay – power supply via external voltage

To be able to reset the PXS24 via an external power supply in the event of a fault, one of its inputs (Pin 7 or 8) can be connected to a relay or pushbutton contact (NO).

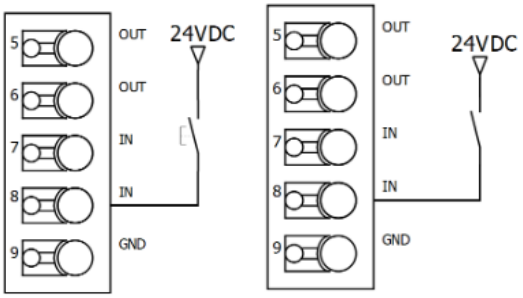

7.5.8 Overcurrent indication via signal element

To control a signal element without an external controller in the event of a fault, the signal element can be connected to a PXS24 output (pin 5 or 6) and to the ground terminal of the communication port.

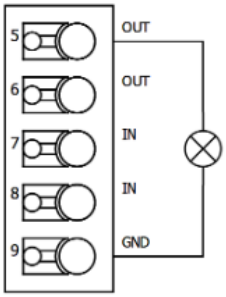

7.5.9 Overcurrent status transfer via relay

Status transfer via relay can be used for potential-free switching.
This also makes it possible to switch off circuits with voltages other than 24 V DC.

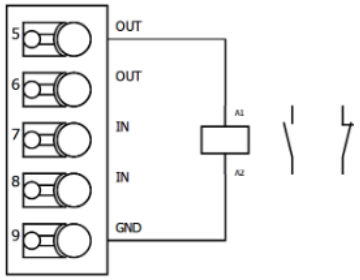

7.5.10 Time-delayed overcurrent status transfer via time relay

To be able to switch off other circuits with a time delay, a time relay with pick-up delay can also be used instead of the relay mentioned in the “overcurrent status transfer via relay” option.

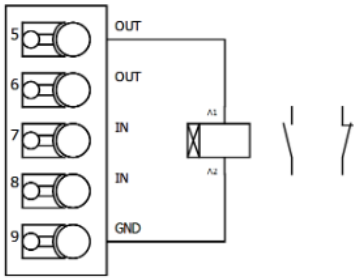

7.5.11 Reset with pushbutton and overcurrent indication via signal element, relay & time relay

The options “overcurrent indication with signal element,” “overcurrent status transfer via relay” and “time-delayed overcurrent status transfer via time relay” can also be used in combination with a reset pushbutton, with power supplied either externally or via the PXS24.

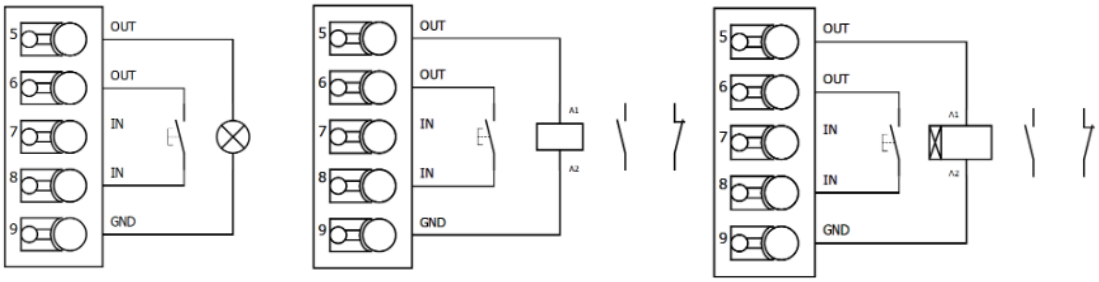

7.5.12 Connecting multiple PXS devices

The inputs and outputs of the PXS24 communication interface enable the connection of multiple protection devices.
Up to 30 PXS24s may be connected with each other.
The two permissible connection types are “sequence control” and “group error message.”
A combination of the two connection types is not possible.

In order to connect the individual switches, their GND terminals must be connected to each other.

7.5.13 Group error message - group connection of several PXS24s (monitoring and switching)

To have full control over a group of several PXS24s – as described under the option “full control via an external controller (monitoring and switching)” – their inputs and outputs can be connected to each other.
In case of an error the external controller will receive a group message.

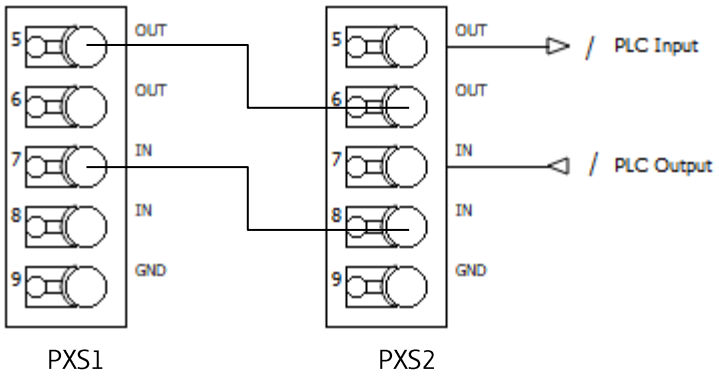

7.5.14 Sequence control

The communication output (pin 5 or 6) of one module can be directly connected to the control input (pin 7 or 8) of another, in order to automatically switch off an additional output in the event of an error. To this end, no additional wiring is necessary.



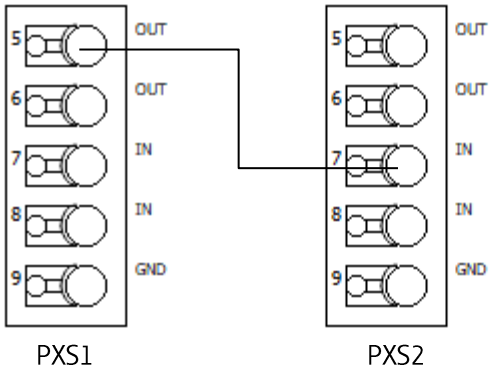

Combination of sequence control and external controller

With this option, the PXS24 can be switched off either by the controller or by another PXS24.
In order to switch off a PXS24 by means of sequence control and a PLC, one of its inputs must be connected to one of the outputs of the master PXS.
The second, free input of the PXS24 then needs to be connected directly to a controller output.

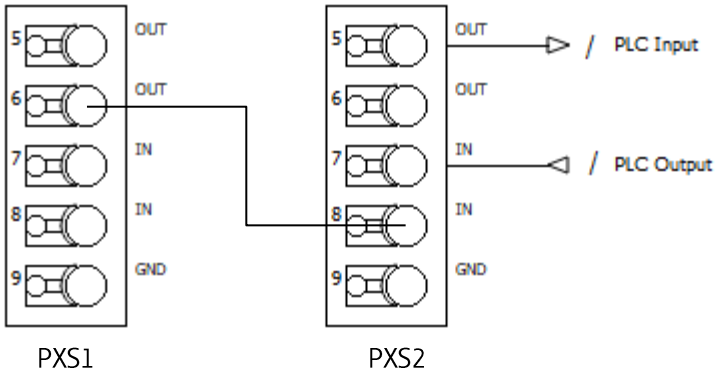

Eaton's electrical business is a global leader with deep regional application expertise in power distribution and circuit protection; power quality, back-up power and energy storage; control and automation; life safety and security; structural solutions; and harsh and hazardous environment solutions. Through end-to-end services, channels and an integrated digital platform and insights Eaton is powering what matters across industries and around the world, helping customers solve their most critical electrical power power management challenges.

For more information, **visit Eaton.com.**

Eaton Industries (Austria) GmbH
Scheydgasse 42
1210 Vienna
Austria

Eaton
EMEA Headquarters
Route de la Longeraie 7
1110 Morges, Switzerland
Eaton.eu

© 2020 Eaton
Subject to change without notice
Printed in Austria
Publication number MN019003EN
Article number
May 2023

Eaton is a registered trademark

All other trademarks are property of their respective owners.