Safety Light Grid
Orion3 Base

Approvals:

Application:

- For body detection
- When power is available on only one side.
- When a sturdy profile is necessary.

Features:

- Body detection, 2 to 4 beams
- Active and passive unit
- Up to 8 m operating distance
- Sturdy profile
- Local reset and EDM
- Type 4



The Orion3 Base light grids are used for body detection, usually for access protection. Transmitter and receiver are both in the same active unit. The beams are reflected by the passive unit. Only the active unit needs to be supplied.

Easy to use

- No more functions or settings than necessary.
- A local reset button can be connected directly to the light grid: no need for cable between the reset button and the electrical cabinet or for an extra control module.
- Each light grid can monitor the actuators without any extra control module (EDM function).

Faster installation

- Less cabling: only the active unit has to be connected.
- Alignment help and a wide angle within the limits of a Type 4 device facilitate alignment.
- Rotation brackets simplify alignment too.
- M12 connectors speed up cabling.

Less downtime

- Since the alignment level is displayed on the unit, the alignment can be improved before an unwanted stop occurs.
- Extensive error indication reduces troubleshooting time.



Only the active unit needs cabling, which saves cable length and installation time.

Technical data

Functional Safety Data	
EN ISO 13849-1:2008	PL e, Cat 4
EN 61508-1..4:2010	SIL3; PFH_d = 9.28 x10^{-9}; HFT = 1; Mission time = 20 years
EN 62061:2005/A1:2013	SIL CL 3
Power supply	+24 VDC ± 20 %
Consumption, Active unit	6.5 W max (without load)
Outputs	2 PNP
Short-circuit protection:	1.4 A at 55°C
Output current:	0.5 A max / output
Output voltage – ON:	Power supply value less 1 V (min.)
Output voltage – OFF:	0.2 V max
Capacitive load:	2.2 µF at +24 VDC max
Connectors	M12 - 8 pole male connector
Cable length (for power supply)	70 m max
Light source	Infrared, LED (950 nm)
Resolution	319,75 - 519,75 mm
Operating distance	0.5...8 m except K2C-090: 0.5..6 m
Ambient light rejection	According to IEC-61496-2:2013
Operating temperature	0…+ 55 °C
Storage temperature	- 25…+ 70 °C
Humidity range	15…95 % (no condensation)
Protection class	IP 65 (EN 60529:2000)
Weight	
Orion3-4-K1C-050-B	1.3 Kg
Orion3-4-K2C-080-B	1.8 Kg
Orion3-4-K2C-090-B	2.1 Kg
Orion3-4-K2C-120-B	2.6 Kg
Orion3-4-M1C-050 (passive)	1.2 Kg
Orion3-4-M2C-080 (passive)	1.7 Kg
Orion3-4-M2C-090 (passive)	1.9 Kg
Orion3-4-M2C-120 (passive)	2.5 Kg
Housing material	Painted aluminium (yellow RAL 1003)
Front glass material	PMMA
Cap material	PBT Valox 508
Connection Active unit*	
White (1)**	Reset/Acknowledge/Reset mode - Must be connected for the light guard to function, either to + 24 VDC for Automatic Reset or to 0 V for Manual Reset.
Brown (2)	+ 24 VDC
Green (3)**	EDM selection- must be connected to +24 VDC to deactivate EDM
Yellow (4)	EDM
Grey (5)	OSSD1
Pink (6)	OSSD2
Blue (7)	0 V
Red (8)	Earth

* Colors according to ABB Jokab Safety standard cables

** The “RESET/ACKNOWLEDGE/RESET MODE” wire and the supply wires MUST be connected in order for the device to function. The other wires may be floating.

Connection examples

Connection to a RT9 safety relay

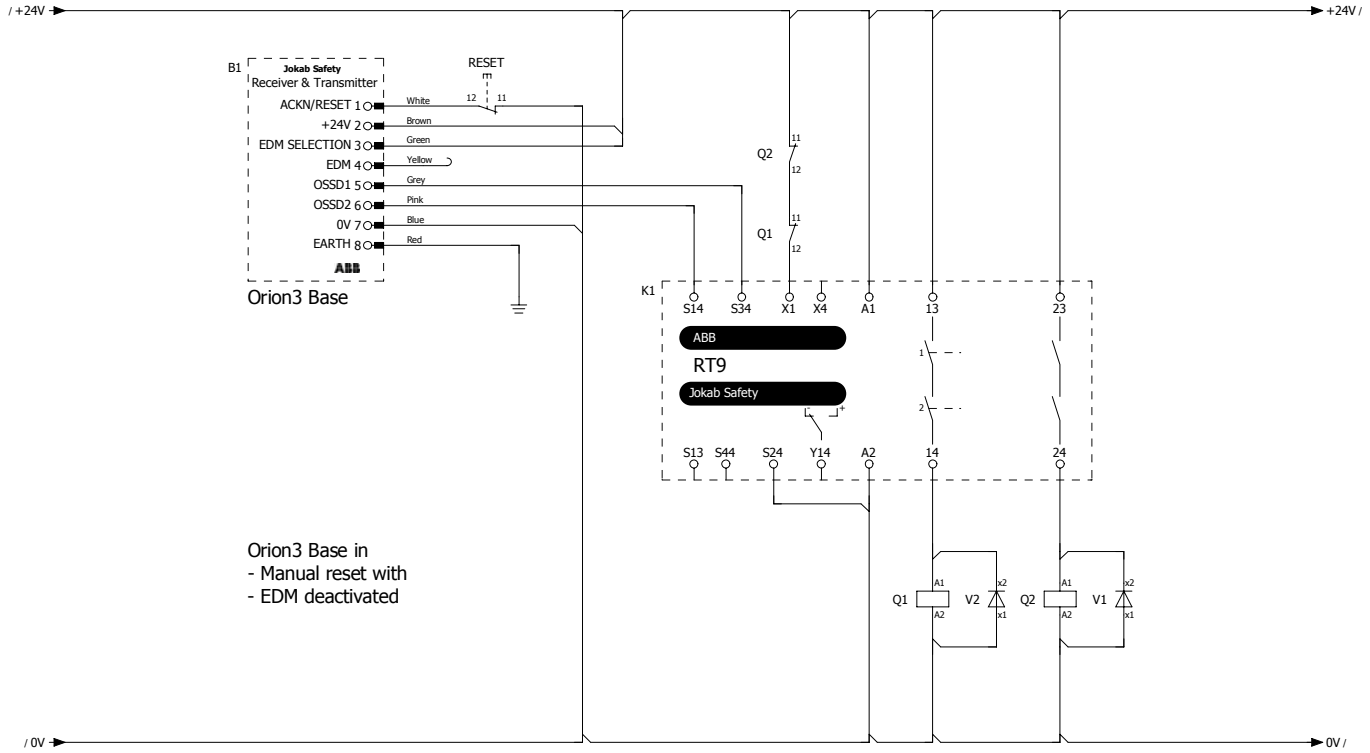

Connection to a Pluto B20 safety PLC

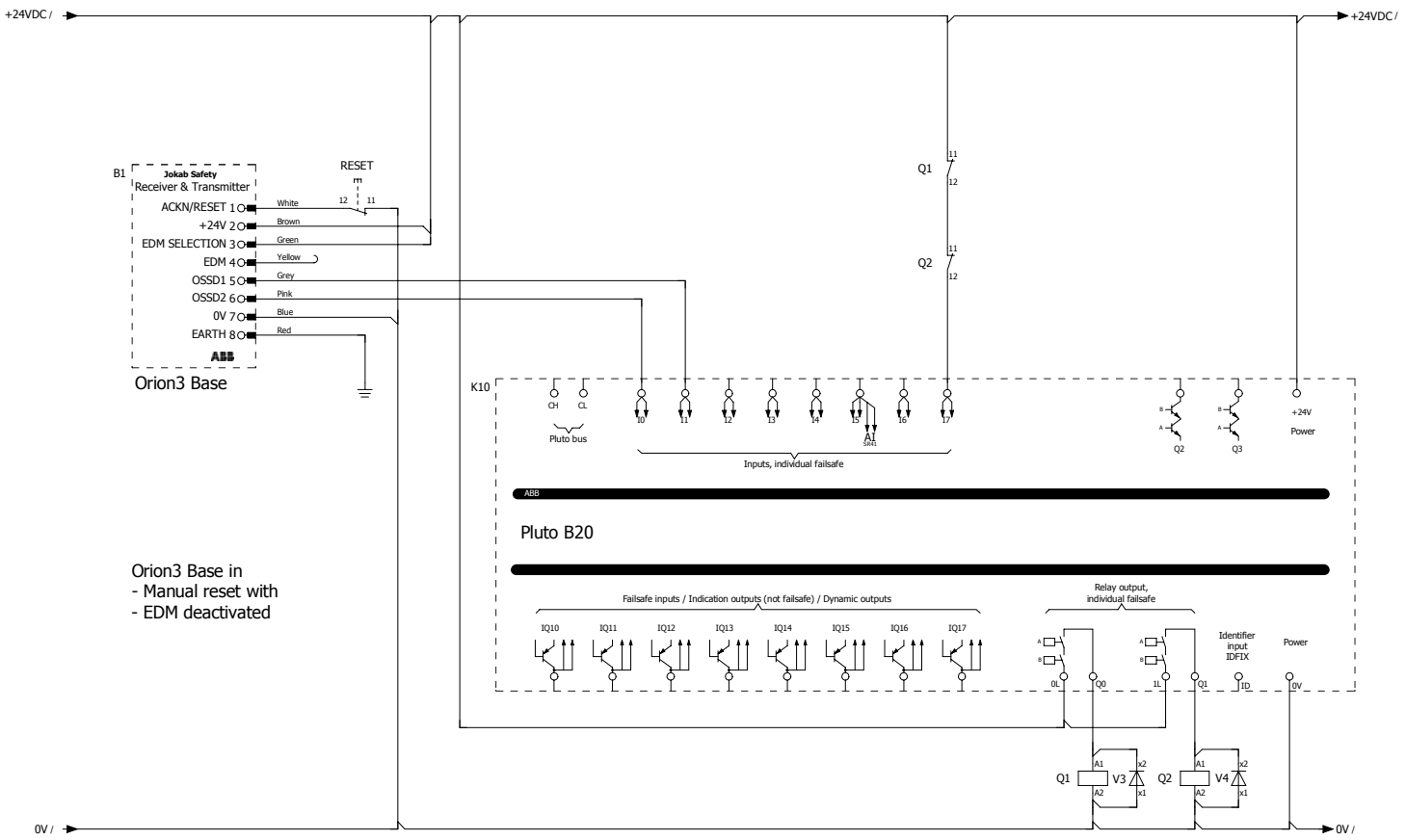

Models and ordering information

Orion3-4-K1C-050-B	2TLA022306R0000	Orion3 Base - Active unit - 2 beams - H = 500 mm
Orion3-4-K2C-080-B	2TLA022306R0100	Orion3 Base - Active unit - 3 beams - H = 800 mm
Orion3-4-K2C-090-B	2TLA022306R0200	Orion3 Base - Active unit - 4 beams - H = 900 mm
Orion3-4-K2C-120-B	2TLA022306R0300	Orion3 Base - Active unit - 4 beams - H = 1200 mm
Orion3-4-M1C-050	2TLA022306R1000	Orion3 Base - Passive unit (mirror) - H = 500 mm
Orion3-4-M2C-080	2TLA022306R1100	Orion3 Base - Passive unit (mirror) - H = 800 mm
Orion3-4-M2C-090	2TLA022306R1300	Orion3 Base - Passive unit (mirror) - H = 900 mm
Orion3-4-M2C-120	2TLA022306R1400	Orion3 Base - Passive unit (mirror) - H = 1200 mm

Please note that active and passive units are ordered separately and both are necessary for the Orion3 Base to function.

Cables

M12-C61	2TLA020056R0000	Straight M12-5 female connector with 6 m shielded cable
M12-C101	2TLA020056R1000	Straight M12-5 female connector with 10 m shielded cable
M12-C201	2TLA020056R1400	Straight M12-5 female connector with 20 m shielded cable
M12-C63	2TLA020056R3000	Straight M12-8 female connector with 6 m shielded cable
M12-C103	2TLA020056R4000	Straight M12-8 female connector with 10 m shielded cable
M12-C203	2TLA020056R4100	Straight M12-8 female connector with 20 m shielded cable

Spare parts (delivered with products originally)

JSM Orion02	2TLA022310R1000	4 standard brackets for Orion3

Accessories

Orion Laser	2TLA022310R5000	Orion Laser pointer
JSM Orion05	2TLA022310R0300	4 rotation brackets for Orion3
JSM Orion08	2TLA022310R0600	Kit for mounting of Orion3 in Stand (4 pieces)
JSM Orion09	2TLA022310R0700	Kit for mounting of Orion3 in Stand (6 pieces)
Orion Stand Plate	2TLA022312R5000	Orion Plate kit for adjustment of protective stand
Orion Stand*		Protective stand
Orion Mirror*		Deviating mirrors in stand

* These accessories are available in different sizes. More information on www.abb.com/jokabsafety.

Dimensions

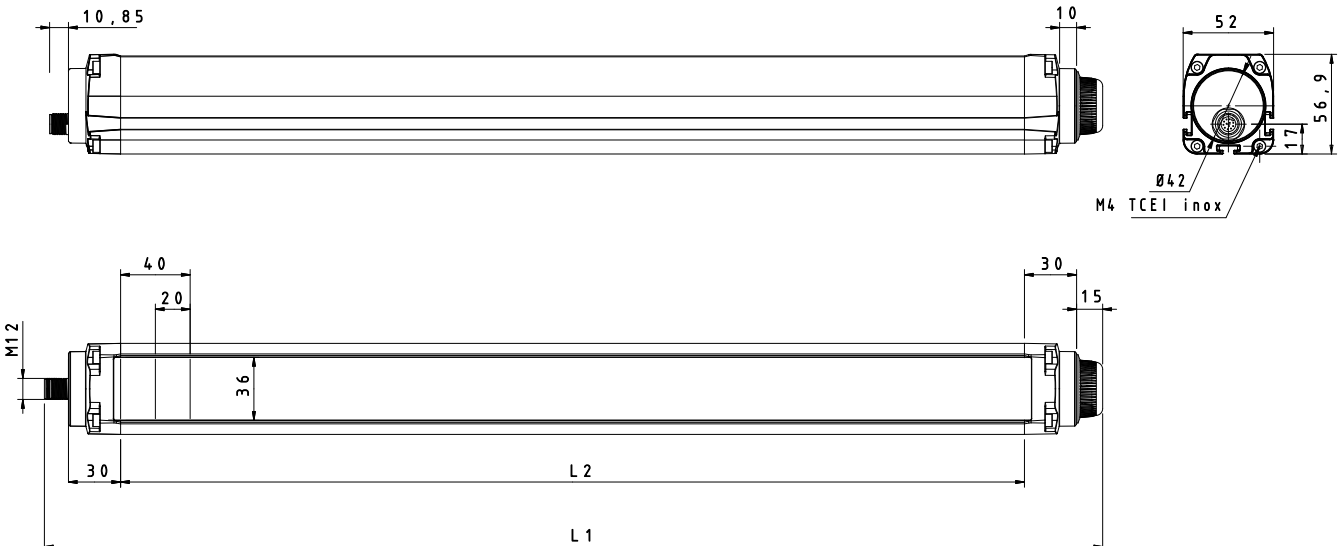

Active unit - All dimensions in millimeters

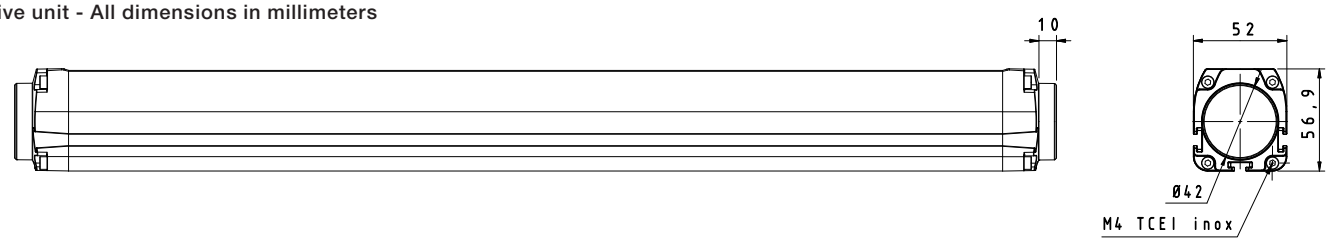

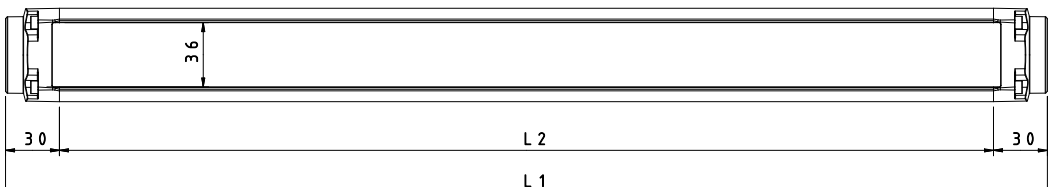

Passive unit - All dimensions in millimeters

Model	L1 (mm)	L2 (mm)
Orion3-4-K1C-050-B (active unit)	606,35	520,50
Orion3-4-K2C-080-B (active unit)	906,35	820,50
Orion3-4-K2C-090-B (active unit)	1006,35	920,50
Orion3-4-K2C-120-B (active unit)	1306,35	1220,50
Orion3-4-M1C-050 (passive unit)	580,50	520,50
Orion3-4-M2C-080 (passive unit)	880,50	820,50
Orion3-4-M2C-090 (passive unit)	980,50	920,50
Orion3-4-M2C-120 (passive unit)	1280,50	1220,50

Contact us

ABB AB
Jokab Safety
Varlabergsvägen 11
SE-434 39 Kungsbacka
Tel. +46 (0) 21-32 50 00

www.abb.com/jokabsafety

Note
We reserve the right to make technical changes or modify the contents of this document without prior notice. With regard to purchase orders, the agreed particulars shall prevail. ABB does not accept any responsibility whatsoever for potential errors or possible lack of information in this document.

We reserve all rights in this document and in the subject matter and illustrations contained therein. Any reproduction, disclosure to third parties or utilization of its contents - in whole or in parts – is forbidden without prior written consent of ABB.

Copyright© 2015 ABB
All rights reserved

2TLC172056L0201

Power and productivity
for a better world™