Type number key

VFD 007 CP 43 A/B/C/S -XY



IP Protection Level
X = 0: IP00
2: IP20

NEMA Level
Y = 0: UL open frame
1: NEMA 1

Installation Type:
A, B, S: Wall mounted
C: Floor mounted

Input voltage
23 = 230 V_{AC} 3Φ
43 = 400 V_{AC} 3Φ
4E = 400 V_{AC} 3Φ with filter
53 = 575 V_{AC} 3Φ
63 = 690 V_{AC} 3Φ

VFD-CP2000 series

Power
007 = 0.75 kW **022** = 2.2 kW
185 = 18.5 kW **370** = 37 kW etc.

Delta **V**ariable **F**requency **D**rive

Option cards

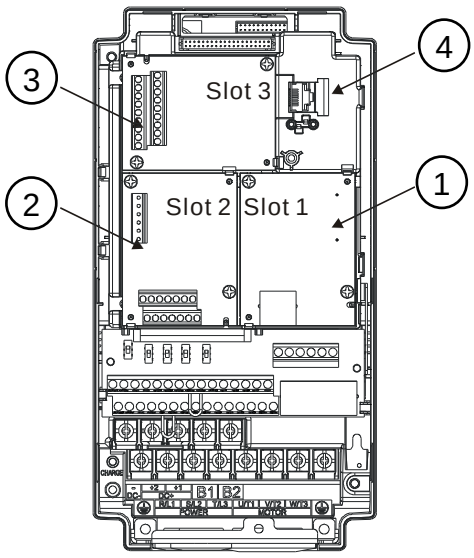

Slot 1: Communication cards

CMC-PN01	Profinet
CMC-PD01	Profibus
CMC-DN01	DeviceNet
EMC-COP01	CANopen
CMC-EIP01	Ethernet/IP & Modbus-TCP, 1 port
CMC-EIP02	Ethernet/IP & Modbus-TCP, 2 ports
CMC-EC01	EtherCAT
eZVFD-CC	BACnet IP

Slot 2: No function

Slot 3: I/O & Relay cards

EMC-D42A	4 MI, 2 MO
EMC-R6AA	6 Relays (NO)
EMC-D611A	6 MI (120V_{AC})
EMC-A22A	2 AI, 2 AO
EMC-BPS01	24 V_{DC} Backup Power Supply Card

4: RJ45(female) for digital keypad

KPC-CC01	Standard LCD
KPC-CE01	Option LED

400V 0.75 - 7.5kW with built-in EMC filter

Type number VFD□□□□□□□□-21		007CP4EA	015CP4EB	022CP4EB	037CP4EB	040CP4EA	055CP4EB	075CP4EB
Rated power (LD/ND)	kW	0.75/0.4	1.5/0.75	2.2/1.5	3.7/2.2	4.0/3.7	5.5/4	7.5/5.5
Rated output current (LD/ND)	A RMS	3/2.8	4.2/3	5.5/4	8.5/6	10.5/9	13/10.5	18/12
Overload (LD/ND)	%	120% 60s;160% 3s / 120% 60s						
Rated output capacity (LD/ND)	kVA	2.4/2.3	2.9/2.4	4/3.2	6/4.8	8.4/7.2	9.6/8.4	11.2/10
Rated input current (LD/ND)	A RMS	4.3/3.5	6/4.3	8.1/5.9	12.4/8.7	16/14	20/15.5	22/17
Mains fuse (for UL: Bussmann)		JJS-10		JJS-15	JJS-20		JJS-30	JJS-40
Non-fuse current breaker	A	5	10	15	20		30	40
Dimensions HxWxD	mm	250x130x170						
Frame *		A1						
Weight	kg	2.6 ±0.3						
Power cable entry	∅mm	2x 28 1x 34						
Signal cable entry	∅mm	2x 22.2						
Section of power cables (stranded)	mm^2	2.1-8.4				3.3-8.4	5.3-8.4	
Cooling		Convection			Fan			
Cooling air flow rate	m^3/hr	none			24	17		
Carrier frequency	kHz	2-15						
EMC-Filter		Built-in						
DC-Choke		Option **						
DC-Bus connection		Yes						
Brake chopper		Built-in						
Recommended brake resistor	Ω/W	750/80		360/200	250/300	150/400	75/1000	
Minimum brake resistor value	Ω	190		126.7	108.6	84.4	54.3	

400V 11 - 18.5kW with built-in EMC filter

Type number VFD□□□□□□□□-21		110CP4EB	150CP4EB	185CP4EB
Rated power (LD/ND)	kW	11/7.5	15/11	18.5/15
Rated output current (LD/ND)	A RMS	24/18	32/24	38/32
Overload (LD/ND)	%	120% 60s;160% 3s / 120% 60s		
Rated output capacity (LD/ND)	kVA	18/14	24/19	29/25
Rated input current (LD/ND)	A RMS	26/20	35/26	42/35
Mains fuse (for UL: Bussmann)		JJS-50	JJS-60	JJS-75
Non-fuse current breaker	A	50	60	75
Dimensions HxWxD	mm	320x190x190		
Frame *		B		
Weight	kg	5.4 ±1		
Power cable entry	∅mm	1x 34 2x 43.8		
Signal cable entry	∅mm	3x 22.2		
Section of power cables (stranded)	mm^2	8.4-21.2		13.3-21.2
Cooling		Fan		
Cooling air flow rate	m^3/hr	92	136	124
Carrier frequency	kHz	2-15		
EMC-Filter		Built-in		
DC-Choke		Option **		
DC-Bus connection		Yes		
Brake chopper		Built-in		
Recommended brake resistor	Ω/W	75/1000	43/1500	32/2000
Minimum brake resistor value	Ω	47.5	42.2	26.2

* See dimensional drawing on Page 10-14.

** Connection for external DC-Choke.

400V 22 - 37kW with built-in EMC filter

Type number VFD□□□□□□□□-21		220CP4EA	300CP4EB	370CP4EB
Rated power (LD/ND)	kW	22/18.5	30/22	37/30
Rated output current (LD/ND)	A RMS	45/38	60/45	73/60
Overload (LD/ND)	%	120% 60s;160% 3s / 120% 60s		
Rated output capacity (LD/ND)	kVA	36/30	45/36	57/48
Rated input current (LD/ND)	A RMS	47/40	66/47	80/63
Mains fuse (for UL: Bussmann)		JJS-100	JJS-125	JJS-150
Non-fuse current breaker	A	100	125	150
Dimensions HxWxD	mm	400x250x210		
Frame *		C		
Weight	kg	9.8 ±1.5		
Power cable entry	∅mm	1x 34 2x 50		
Signal cable entry	∅mm	4x 22.2		
Section of power cables (stranded)	mm^2	21.2-53.5	26.7-53.5	33.6-53.5
Cooling		Fan		
Cooling air flow rate	m^3/hr	204		250
Carrier frequency	kHz	2-10		
EMC-Filter		Built-in		
DC-Choke		Option **		
DC-Bus connection		Yes		
Brake chopper		Built-in		
Recommended brake resistor	Ω/W	32/2000	26/3000	16/4000
Minimum brake resistor value	Ω	23		14.1

400V 45 - 90kW with conduit box

Type number VFD□□□□□□□□-21		450CP43S	550CP43S	750CP43B	900CP43A
Rated power (LD/ND)	kW	45/37	55/45	75/55	90/75
Rated output current (LD/ND)	A RMS	91/73	110/91	150/110	180/150
Overload (LD/ND)	%	120% 60s;160% 3s / 120% 60s			
Rated output capacity (LD/ND)	kVA	73/58	88/73	115/88	143/120
Rated input current (LD/ND)	A RMS	91/74	110/101	150/114	180/157
Mains fuse (for UL: Bussmann)		JJS-175	JJS-250	JJS-300	
Non-fuse current breaker	A	175	250	300	
Dimensions HxWxD	mm	614.4x280x255		688.3x330x275	
Frame *		D0-2		D2	
Weight	kg	40			
Power cable entry	∅mm	2x 76.2 2x 34			
Signal cable entry	∅mm	2x 22			
Section of power cables, stranded (with ring)	mm^2	53.5-107	67.4-107	85-107	107
Cooling		Fan			
Cooling air flow rate	m^3/hr	355			367
Carrier frequency	kHz	2-10			2-9
EMC-Filter		No			
DC-Choke		Built-in			
DC-Bus connection		Yes			
Brake chopper		External option			
Recommended brake resistor ***	Ω/W	15/4800	13/6000	10.2/8000	7.5/9600
Minimum brake resistor value ***	Ω	12.7		9.5	6.3

* See dimensional drawing on Page 10-14.
** Connection for external DC-Choke.
*** With external brake unit.

DELTA ELECTRONICS, INC.
ALL RIGHTS RESERVED
Delta reserves the right to make changes without prior notice

400V 110 - 185kW with conduit box

Type number VFD□□□□□□□□-21		1100CP43A	1320CP43B	1600CP43A	1850CP43B
Rated power (LD/ND)	kW	110/90	132/110	160/132	185/160
Rated output current (LD/ND)	A RMS	220/180	260/220	310/260	370/310
Overload (LD/ND)	%	120% 60s;160% 3s / 120% 60s			
Rated output capacity (LD/ND)	kVA	175/143	196/175	247/207	343/247
Rated input current (LD/ND)	A RMS	220/167	260/207	310/240	370/300
Mains fuse (for UL: Bussmann)		JJS-400	JJS-500	JJS-600	
Non-fuse current breaker	A	400	500	600	
Dimensions HxWxD	mm	715.8x370x300		940x420x300	
Frame *		E2		F2	
Weight	kg	66		88	
Power cable entry	∅mm	2x 92 4x 34		2x 92 4x 35	
Signal cable entry	∅mm	2x 22		2x 22	
Section of power cables, stranded (with ring)	mm^2	67.4-107 (2x)		107 (2x)	
Cooling		Fan			
Cooling air flow rate	m^3/hr	561	503	571	681
Carrier frequency (LD/ND)	kHz	2-9			
EMC-Filter		No			
DC-Choke		Built-in			
DC-Bus connection		Yes			
Brake chopper		External option			
Recommended brake resistor ***	Ω/W	6.5/12000	6/12000	4/18000	
Minimum brake resistor value ***	Ω	6.3	6	4	

400V 200 - 280kW with conduit box

Type number VFD□□□□□□□□-21			2000CP43A	2200CP43B	2500CP43A	2800CP43B
Rated power (LD/ND)		kW	200/160	220/185	250/200	280/220
Rated output current (LD/ND)		A RMS	395/310	460/370	481/395	530/460
Overload (LD/ND)		%	120% 60s;160% 3s / 120% 60s			
Rated output capacity (LD/ND)		kVA	315/247	367/295	383/315	422/367
Rated input current (LD/ND)		A RMS	395/300	460/380	481/390	530/400
Mains fuse (for UL: Bussmann)			JJS-800		KTU-1000	
Non-fuse current breaker		A	800		1000	
Dimensions HxWxD		mm	1240.2x500x397			
Frame *			G2			
Weight		kg	134±4			
Power cable entry		∅mm	2x 34 3x 117.5			
Signal cable entry		∅mm	2x 22			
Section of power cables, stranded (with ring)	Input	mm^2	50-120 (4x)	70-120 (4x)	70-120 (4x)	95-120 (4x)
	Output		150-240 (2x)	240 (2x)	240 (2x)	240 (2x)
Cooling			Fan			
Cooling air flow rate		m^3/hr	771			
Carrier frequency (LD/ND)		kHz	2-9			
EMC-Filter			No			
DC-Choke			Built-in			
DC-Bus connection			Yes			
Brake chopper			External option			
Recommended brake resistor ***		Ω/W	4/18000	3.4/21000	3/24000	3/24000
Minimum brake resistor value ***		Ω	4	3.4	3	3

* See dimensional drawing on Page 10-14.

*** With external brake unit.

DELTA ELECTRONICS, INC.
ALL RIGHTS RESERVED

Delta reserves the right to make changes without prior notice

400V 315 - 630kW cabinet

Type number VFD□□□□□□□□□-21		3150CP43C	3550CP43C	4000CP43C	5000CP43C	5600CP43C	6300CP43C
Rated power (LD/ND)	kW	315/280	355/315	400/355	500/450	560/500	630/560
Rated output current (LD/ND)	A RMS	616/550	683/616	770/683	930/866	1094/930	1212/1094
Overload (LD/ND)	%	120% 60s;160% 3s / 120% 60s					
Rated output capacity (LD/ND)	kVA	491/438	544/491	613/544	741/690	872/741	966/872
Rated input current (LD/ND)	A RMS	616/494	683/555	770/625	930/866	1094/930	1212/1094
Mains fuse (for UL: Bussmann)		KTU-1200	KTU-1350	KTU-1500		170M6021	170M6021
Non-fuse current breaker	A	1200	1350	1500	1600	2000	2000
Dimensions HxWxD	mm	1745x700x404					
Frame *		H3					
Weight	kg	228					
Power cable entry	∅mm	2x 34 4x 117.5					
Signal cable entry	∅mm	4x 22					
Section of power cables, stranded (with ring)	mm^2	120-185 (4x)		150-185 (4x)	185 (4x)	240 (4x)	
Cooling		Fan					
Cooling air flow rate	m^3/hr	1307				1618.9	
Carrier frequency (LD/ND)	kHz	2-9					
EMC-Filter		No					
DC-Choke		Built-in					
DC-Bus connection		Yes					
Brake chopper		External option					
Recommended brake resistor ***	Ω/W	2/36000		1.7/42000	1.3/54000	1.1/63000	1.0/72000
Minimum brake resistor value ***	Ω	2		1.7	1.1	1.1	1.0

* See dimensional drawing on Page 10-14.
*** With external brake unit.

DELTA ELECTRONICS, INC.
ALL RIGHTS RESERVED
Delta reserves the right to make changes without prior notice

400V 0.75 - 7.5kW no filter

Type number VFD□□□□□□□□-21		007CP43A	015CP43B	022CP43B	037CP43B	040CP43A	055CP43B	075CP43B
Rated power (LD/ND)	kW	0.75/0.4	1.5/0.75	2.2/1.5	3.7/2.2	4.0/3.7	5.5/4	7.5/5.5
Rated output current (LD/ND)	A RMS	3/2.8	4.2/3	5.5/4	8.5/6	10.5/9	13/10.5	18/12
Overload (LD/ND)	%	120% 60s;160% 3s / 120% 60s						
Rated output capacity (LD/ND)	kVA	2.4/2.3	2.9/2.4	4/3.2	6/4.8	8.4/7.2	9.6/8.4	11.2/10
Rated input current (LD/ND)	A RMS	4.3/3.5	6/4.3	8.1/5.9	12.4/8.7	16/14	20/15.5	22/17
Mains fuse (for UL: Bussmann)		JJS-10		JJS-15	JJS-20		JJS-30	JJS-40
Non-fuse current breaker	A	5	10	15	20		30	40
Dimensions HxWxD	mm	250x130x170						
Frame *		A1						
Weight	kg	2.6 ±0.3						
Power cable entry	∅mm	2x 28 1x 34						
Signal cable entry	∅mm	2x 22.2						
Section of power cables (stranded)	mm^2	2.1-8.4				3.3-8.4	5.3-8.4	
Cooling		Convection			Fan			
Cooling air flow rate	m^3/hr	none			24	17		
Carrier frequency	kHz	2-15						
EMC-Filter		No						
DC-Choke		Option **						
DC-Bus connection		Yes						
Brake chopper		Built-in						
Recommended brake resistor	Ω/W	750/80		360/200	250/300	150/400	75/1000	
Minimum brake resistor value	Ω	190		126.7	108.6	84.4	54.3	

400V 11 - 18.5kW no filter

Type number VFD□□□□□□□□-21		110CP43B	150CP43B	185CP43B
Rated power (LD/ND)	kW	11/7.5	15/11	18.5/15
Rated output current (LD/ND)	A RMS	24/18	32/24	38/32
Overload (LD/ND)	%	120% 60s;160% 3s / 120% 60s		
Rated output capacity (LD/ND)	kVA	18/14	24/19	29/25
Rated input current (LD/ND)	A RMS	26/20	35/26	42/35
Mains fuse (for UL: Bussmann)		JJS-50	JJS-60	JJS-75
Non-fuse current breaker	A	50	60	75
Dimensions HxWxD	mm	320x190x190		
Frame *		B		
Weight	kg	5.4 ±1		
Power cable entry	∅mm	1x 34 2x 43.8		
Signal cable entry	∅mm	3x 22.2		
Section of power cables (stranded)	mm^2	8.4-21.2		13.3-21.2
Cooling		Fan		
Cooling air flow rate	m^3/hr	92	136	124
Carrier frequency	kHz	2-15		
EMC-Filter		No		
DC-Choke		Option **		
DC-Bus connection		Yes		
Brake chopper		Built-in		
Recommended brake resistor	Ω/W	75/1000	43/1500	32/2000
Minimum brake resistor value	Ω	47.5	42.2	26.2

* See dimensional drawing on Page 10-14.

** Connection for external DC-Choke.

ALL RIGHTS RESERVED

Delta reserves the right to make changes without prior notice

400V 22 - 37kW no filter

Type number VFD□□□□□□□-21		220CP43A	300CP43B	370CP43B
Rated power (LD/ND)	kW	22/18.5	30/22	37/30
Rated output current (LD/ND)	A RMS	45/38	60/45	73/60
Overload (LD/ND)	%	120% 60s;160% 3s / 120% 60s		
Rated output capacity (LD/ND)	kVA	36/30	45/36	57/48
Rated input current (LD/ND)	A RMS	47/40	66/47	80/63
Mains fuse (for UL: Bussmann)		JJS-100	JJS-125	JJS-150
Non-fuse current breaker	A	100	125	150
Dimensions HxWxD	mm	400x250x210		
Frame *		C		
Weight	kg	9.8 ±1.5		
Power cable entry	∅mm	1x 34 2x 50		
Signal cable entry	∅mm	4x 22.2		
Section of power cables (stranded)	mm^2	21.2-53.5	26.7-53.5	33.6-53.5
Cooling		Fan		
Cooling air flow rate	m^3/hr	204		250
Carrier frequency	kHz	2-10		
EMC-Filter		No		
DC-Choke		Option **		
DC-Bus connection		Yes		
Brake chopper		Built-in		
Recommended brake resistor	Ω/W	32/2000	26/3000	16/4000
Minimum brake resistor value	Ω	23		14.1

400V 37 - 75kW no conduit box

Type number VFD□□□□□□□-00		450CP43S	550CP43S	750CP43B	900CP43A
Rated power (LD/ND)	kW	45/37	55/45	75/55	90/75
Rated output current (LD/ND)	A RMS	91/73	110/91	150/110	180/150
Overload (LD/ND)	%	120% 60s;160% 3s / 120% 60s			
Rated output capacity (LD/ND)	kVA	73/58	88/73	115/88	143/120
Rated input current (LD/ND)	A RMS	91/74	110/101	150/114	180/157
Mains fuse (for UL: Bussmann)		JJS-175	JJS-250	JJS-300	
Non-fuse current breaker	A	175	250	300	
Dimensions HxWxD	mm	500x280x255		550x330x275	
Frame *		D0-1		D1	
Weight	kg	37.6			
Power cable entry	∅mm	open			
Signal cable entry	∅mm	open			
Section of power cables, stranded (with ring)	mm^2	53.5-107	67.4-107	85-107	107
Cooling		Fan			
Cooling air flow rate	m^3/hr	355			367
Carrier frequency	kHz	2-10			2-9
EMC-Filter		No			
DC-Choke		Built-in			
DC-Bus connection		Yes			
Brake chopper		External option			
Recommended brake resistor ***	Ω/W	15/4800	13/6000	10.2/8000	7.5/9600
Minimum brake resistor value ***	Ω	12.7		9.5	6.3

* See dimensional drawing on Page 10-14.
** Connection for external DC-Choke.
*** With external brake unit.

DELTA ELECTRONICS, INC.
ALL RIGHTS RESERVED
Delta reserves the right to make changes without prior notice

400V 110 - 185kW no conduit box

Type number VFD□□□□□□□□-00		1100CP43A	1320CP43B	1600CP43A	1850CP43B
Rated power (LD/ND)	kW	110/90	132/110	160/132	185/160
Rated output current (LD/ND)	A RMS	220/180	260/220	310/260	370/310
Overload (LD/ND)	%	120% 60s;160% 3s / 120% 60s			
Rated output capacity (LD/ND)	kVA	175/143	196/175	247/207	343/247
Rated input current (LD/ND)	A RMS	220/167	260/207	310/240	370/300
Mains fuse (for UL: Bussmann)		JJS-400	JJS-500	JJS-600	
Non-fuse current breaker	A	400	500	600	
Dimensions HxWxD	mm	589x370x300		800x420x300	
Frame *		E1		F1	
Weight	kg	63.6		85	
Power cable entry	∅mm	open			
Signal cable entry	∅mm	open			
Section of power cables, stranded (with ring)	mm^2	67.4-107 (2x)		107-152 (2x)	152 (2x)
Cooling		Fan			
Cooling air flow rate	m^3/hr	561	503	571	681
Carrier frequency (LD/ND)	kHz	2-9			
EMC-Filter		No			
DC-Choke		Built-in			
DC-Bus connection		Yes			
Brake chopper		External option			
Recommended brake resistor ***	Ω/W	6.5/12000	6/12000	4/18000	
Minimum brake resistor value ***	Ω	6.3	6	4	

400V 200 - 280kW no conduit box

Type number VFD□□□□□□□□-21			2000CP43A	2200CP43B	2500CP43A	2800CP43B
Rated power (LD/ND)		kW	200/160	220/185	250/200	280/220
Rated output current (LD/ND)		A RMS	395/310	460/370	481/395	530/460
Overload (LD/ND)		%	120% 60s;160% 3s / 120% 60s			
Rated output capacity (LD/ND)		kVA	315/247	367/295	383/315	422/367
Rated input current (LD/ND)		A RMS	395/300	460/380	481/390	530/400
Mains fuse (for UL: Bussmann)			JJS-800		KTU-1000	
Non-fuse current breaker		A	800		1000	
Dimensions HxWxD		mm	1000x500x397			
Frame *			G1			
Weight		kg	134±4			
Power cable entry		∅mm	2x 34 3x 117.5			
Signal cable entry		∅mm	2x 22			
Section of power cables, stranded (with ring)	Input	mm^2	70-120 (4x)	95-120 (4x)	120 (4x)	120 (4x)
	Output		240 (2x)			
Cooling			Fan			
Cooling air flow rate		m^3/hr	771			
Carrier frequency (LD/ND)		kHz	2-9			
EMC-Filter			No			
DC-Choke			Built-in			
DC-Bus connection			Yes			
Brake chopper			External option			
Recommended brake resistor ***		Ω/W	4/18000	3.4/21000	3/24000	3/24000
Minimum brake resistor value ***		Ω	4	3.4	3	3

* See dimensional drawing on Page 10-14.

*** With external brake unit.

DELTA ELECTRONICS, INC.
ALL RIGHTS RESERVED

Delta reserves the right to make changes without prior notice

400V 315 - 630kW no conduit box

Type number VFD□□□□□□□□□-21		3150CP43C	3550CP43C	4000CP43C	5000CP43C	5600CP43C	6300CP43C
Rated power (LD/ND)	kW	315/280	355/315	400/355	500/450	560/500	630/560
Rated output current (LD/ND)	A RMS	616/550	683/616	770/683	930/866	1094/930	1212/1094
Overload (LD/ND)	%	120% 60s;160% 3s / 120% 60s					
Rated output capacity (LD/ND)	kVA	491/438	544/491	613/544	741/690	872/741	966/872
Rated input current (LD/ND)	A RMS	616/494	683/555	770/625	930/866	1094/930	1212/1094
Mains fuse (for UL: Bussmann)		KTU-1200	KTU-1350	KTU-1500		170M6021	170M6021
Non-fuse current breaker	A	1200	1350	1500	1600	2000	2000
Dimensions HxWxD	mm	1435x700x398					
Frame *		H1					
Weight	kg	228					
Power cable entry	∅mm	2x 34 4x 117.5					
Signal cable entry	∅mm	4x 22					
Section of power cables, stranded (with ring)	mm^2	150-185 (4x)			185 (4x)	240-300 (4x)	300 (4x)
Cooling		Fan					
Cooling air flow rate	m^3/hr	1307				1618.9	
Carrier frequency (LD/ND)	kHz	2-9					
EMC-Filter		No					
DC-Choke		Built-in					
DC-Bus connection		Yes					
Brake chopper		External option					
Recommended brake resistor ***	Ω/W	2/36000		1.7/42000	1.3/54000	1.1/63000	1.0/72000
Minimum brake resistor value ***	Ω	2		1.7	1.1	1.1	1.0

* See dimensional drawing on Page 10-14.
*** With external brake unit.

Main circuit wiring Frame A

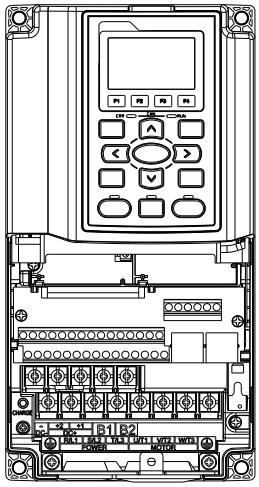

Main circuit wiring Frame B

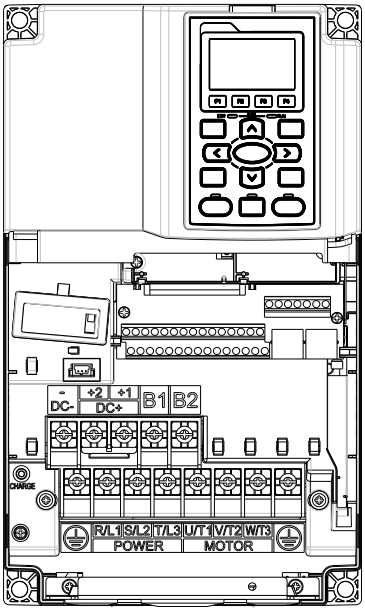

Main circuit wiring Frame C

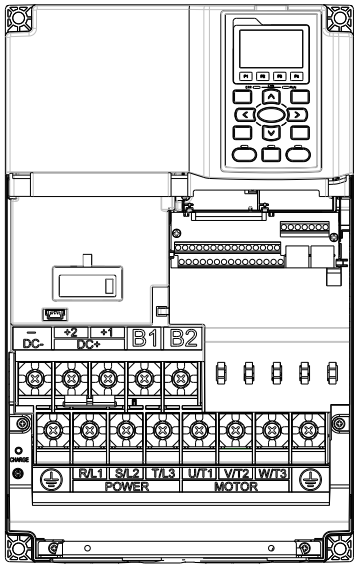

Main circuit wiring Frame D

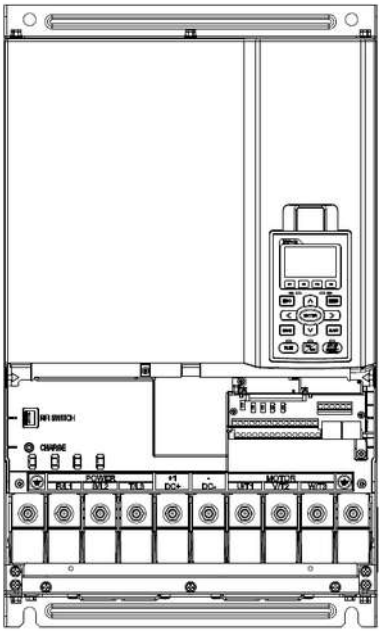

DELTA ELECTRONICS, INC.
ALL RIGHTS RESERVED

Delta reserves the right to make changes without prior notice

Main circuit wiring Frame E

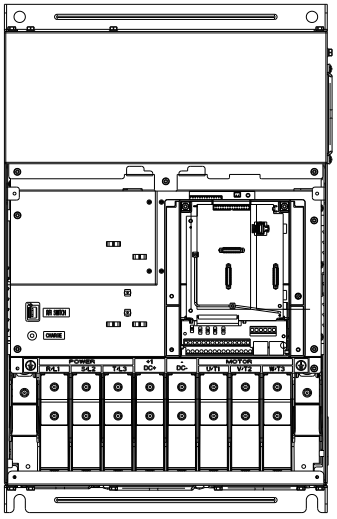

Main circuit wiring Frame F

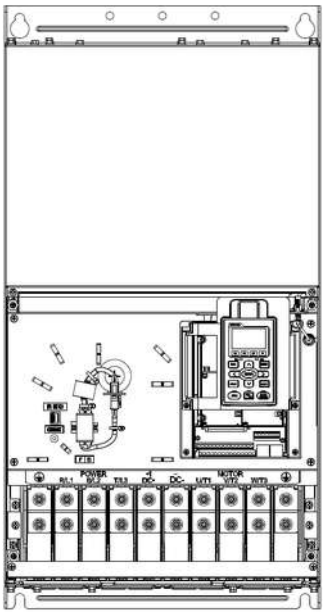

Main circuit wiring Frame G

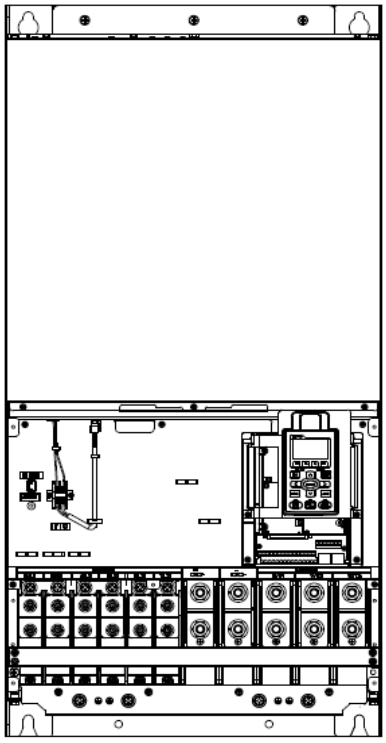

Main circuit wiring Frame H

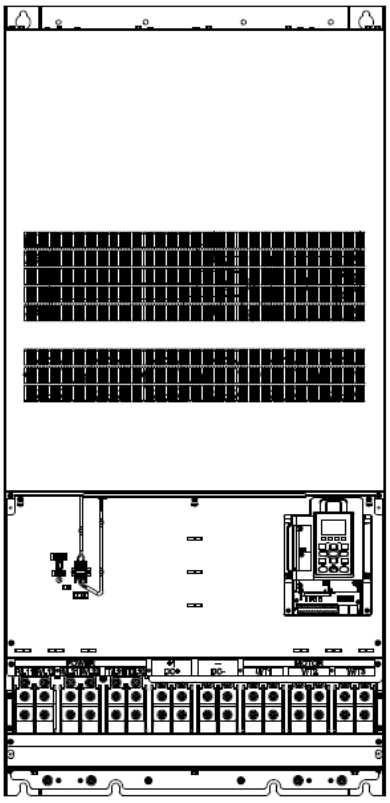

Frame sizes and dimensions in mm [inches]

Frame A

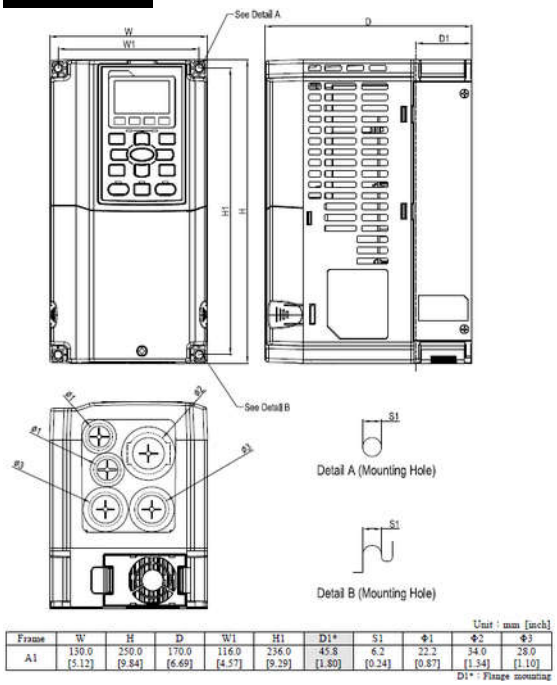

Unit : mm [inch]

Frame	W	H	D	W1	H1	D1*	S1	Φ1	Φ2	Φ3
A1	130.0 [5.12]	250.0 [9.84]	170.0 [6.69]	116.0 [4.57]	236.0 [9.29]	45.8 [1.80]	6.2 [0.24]	22.2 [0.87]	34.0 [1.34]	28.0 [1.10]

D1* : Flange mounting

Frame B

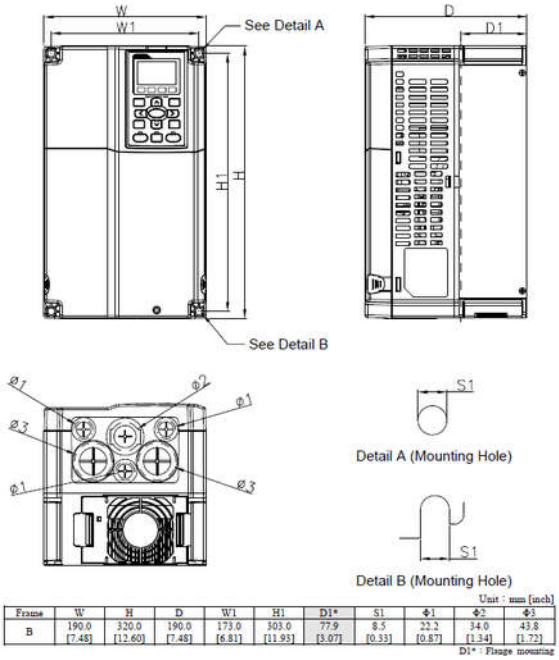

Unit : mm [inch]

Frame	W	H	D	W1	H1	D1*	S1	Φ1	Φ2	Φ3
B	190.0 [7.48]	320.0 [12.60]	190.0 [7.48]	173.0 [6.81]	303.0 [11.93]	77.9 [3.07]	8.5 [0.33]	22.2 [0.87]	34.0 [1.34]	43.8 [1.72]

D1* : Flange mounting

Frame C

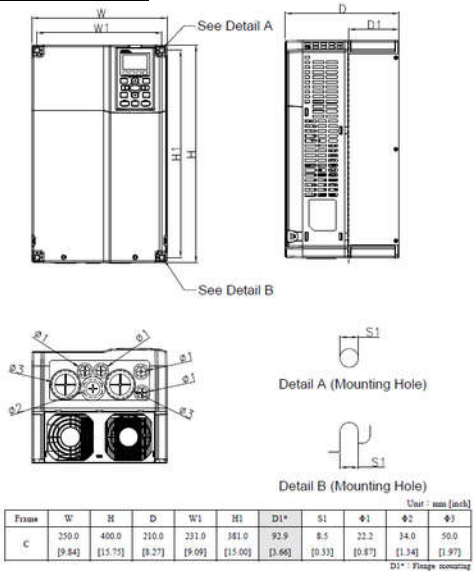

Unit : mm [inch]

Frame	W	H	D	W1	H1	D1*	S1	Φ1	Φ2	Φ3
C	250.0 [9.84]	400.0 [15.75]	210.0 [8.27]	231.0 [9.09]	381.0 [15.00]	92.9 [3.66]	8.5 [0.33]	22.2 [0.87]	34.0 [1.34]	50.0 [1.97]

D1* : Flange mounting

Frame D0-1/D0-2: See page 14.

Frame sizes and dimensions in mm [inches] (cont'd)

Frame D1

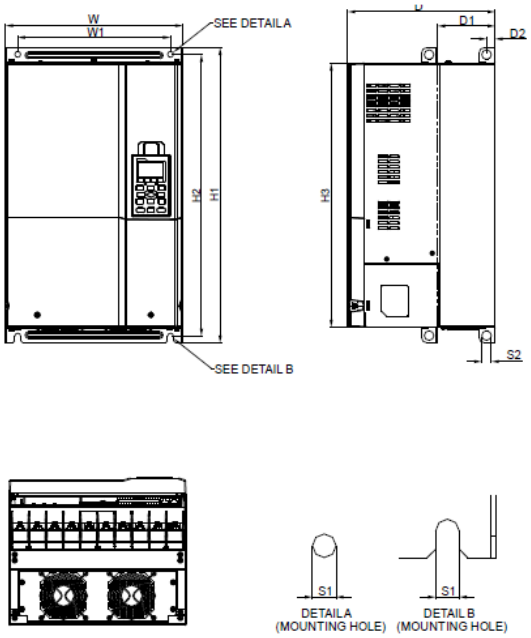

Frame D2

Frame D0 see page 14

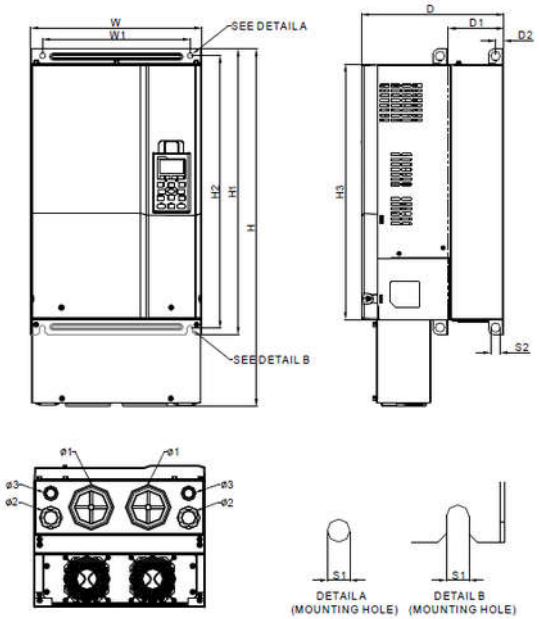

Unit : mm[inch]

Frame	W	H	D	W1	H1	H2	H3	D1*	D2	S1	S2	Φ1	Φ2	Φ3
D1	330.0 [12.99]	-	275.0 [10.83]	285.0 [11.22]	550.0 [21.65]	525.0 [20.67]	492.0 [19.37]	107.2 [4.22]	16.0 [0.63]	11.0 [0.43]	18.0 [0.71]	-	-	-
D2	330.0 [12.99]	688.3 [27.10]	275.0 [10.83]	285.0 [11.22]	550.0 [21.65]	525.0 [20.67]	492.0 [19.37]	107.2 [4.22]	16.0 [0.63]	11.0 [0.43]	18.0 [0.71]	76.2 [3.00]	34.0 [1.34]	22.0 [0.87]

D1* : Flange mounting

Frame E1

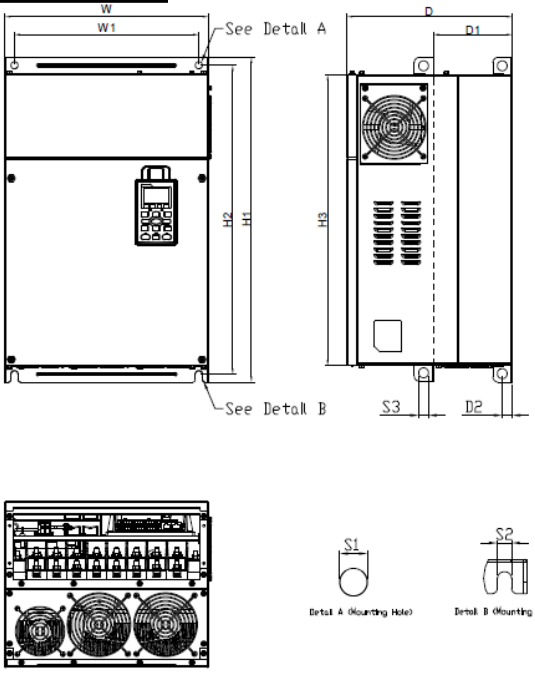

Frame E2

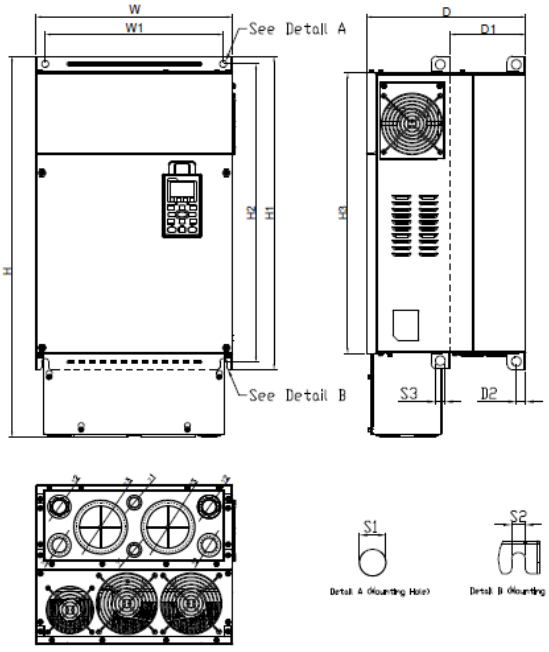

Unit : mm [inch]

Frame	W	H	D	W1	H1	H2	H3	D1*	D2	S1, S2	S3	Φ1	Φ2	Φ3
E1	370.0 [14.57]	-	300.0 [11.81]	335.0 [13.19]	589 [23.19]	560.0 [22.05]	528.0 [20.80]	143.0 [5.63]	18.0 [0.71]	13.0 [0.51]	18.0 [0.71]	-	-	-
E2	370.0 [14.57]	715.8 [28.18]	300.0 [11.81]	335.0 [13.19]	589 [23.19]	560.0 [22.05]	528.0 [20.80]	143.0 [5.63]	18.0 [0.71]	13.0 [0.51]	18.0 [0.71]	22.0 [0.87]	34.0 [1.34]	92.0 [3.62]

D1* : Flange mounting

Frame F1

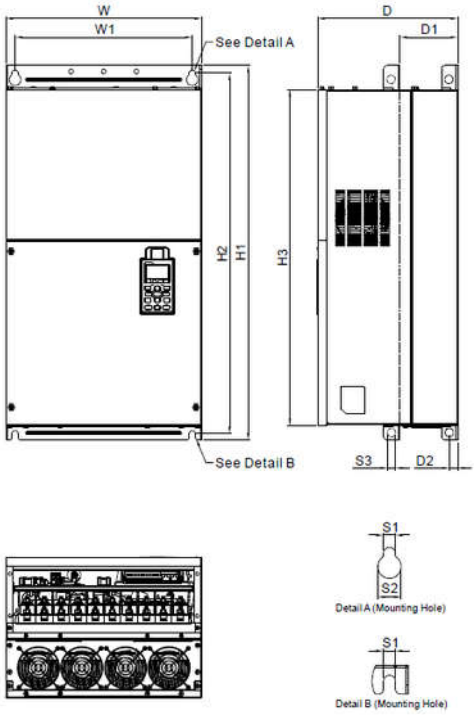

Frame F2

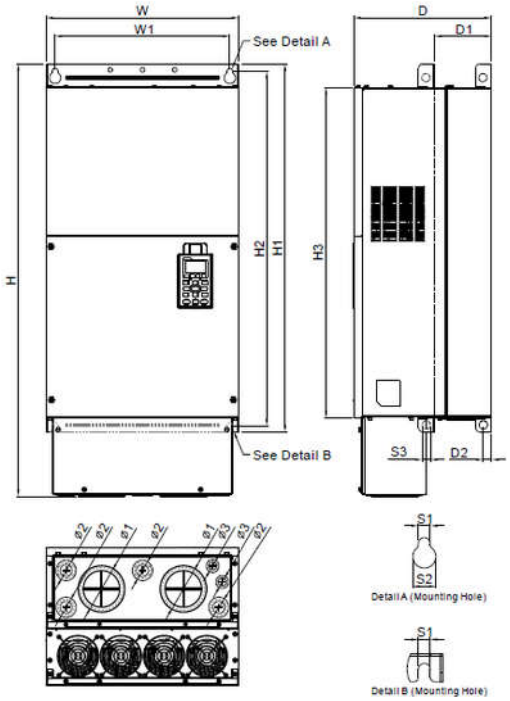

Unit : mm [inch]

Frame	W	H	D	W1	H1	H2	H3	D1*	D2	S1	S2	S3
F1	420.0 [16.54]	-	300.0 [11.81]	380.0 [14.96]	800.0 [31.50]	770.0 [30.32]	717.0 [28.23]	124.0 [4.88]	18.0 [0.71]	13.0 [0.51]	25.0 [0.98]	18.0 [0.71]
F2	420.0 [16.54]	940.0 [37.00]	300.0 [11.81]	380.0 [14.96]	800.0 [31.50]	770.0 [30.32]	717.0 [28.23]	124.0 [4.88]	18.0 [0.71]	13.0 [0.51]	25.0 [0.98]	18.0 [0.71]

Frame	Φ1	Φ2	Φ3
F1	-	-	-
F2	92.0 [3.62]	35.0 [1.38]	22.0 [0.87]

Frame G1

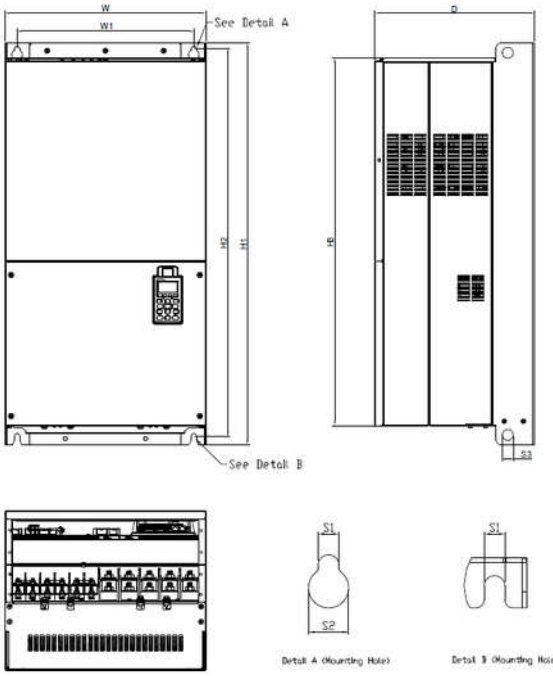

Frame G2

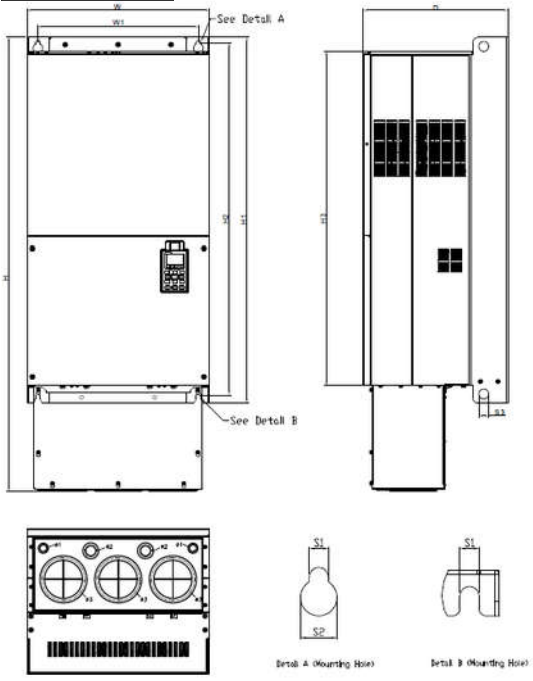

Unit : mm [inch]

Frame	W	H	D	W1	H1	H2	H3	S1	S2	S3	Φ1	Φ2	Φ3
G1	500.0 [19.69]	-	397.0 [15.63]	440.0 [217.32]	1000.0 [39.37]	963.0 [37.91]	913.6 [35.97]	13.0 [0.51]	26.5 [1.04]	27.0 [1.06]	-	-	-
G2	500.0 [19.69]	1240.2 [48.83]	397.0 [15.63]	440.0 [217.32]	1000.0 [39.37]	963.0 [37.91]	913.6 [35.97]	13.0 [0.51]	26.5 [1.04]	27.0 [1.06]	22.0 [0.87]	34.0 [1.34]	117.5 [4.63]

Frame H1

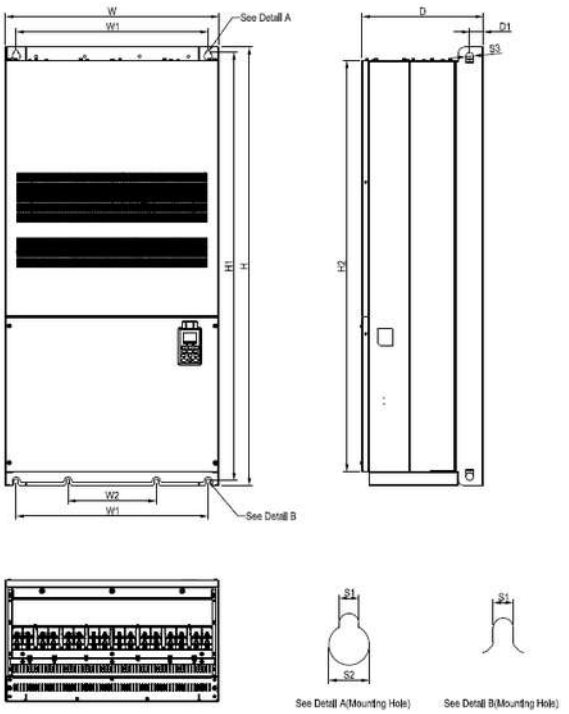

Frame H3 (H2 same dimensions)

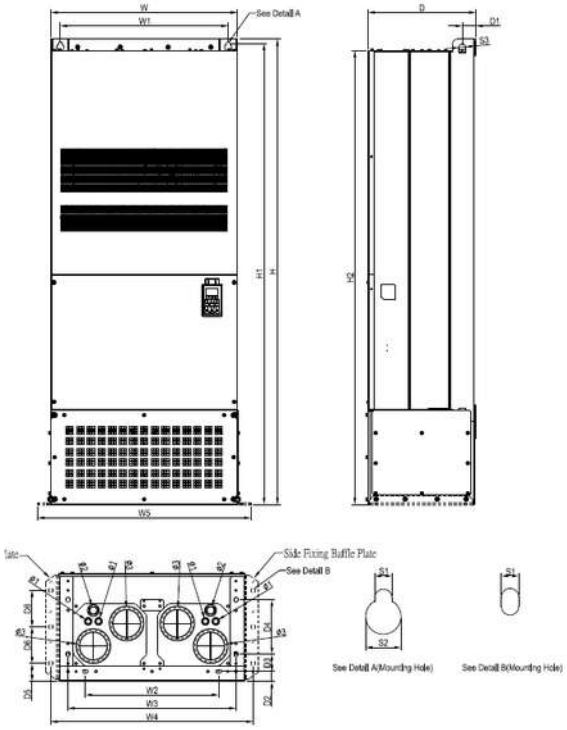

Unit：mm [inch]

Frame	W	H	D	W1	W2	W3	W4	W5	W6	H1	H2	H3	H4
H1	700.0 [27.56]	1435.0 [56.5]	398.0 [15.67]	630.0 [24.8]	290.0 [11.42]	-	-	-	-	1403.0 [55.24]	1346.6 [53.02]	-	-
H2	700.0 [27.56]	1745.0 [68.70]	404.0 [15.90]	630.0 [24.8]	500.0 [19.69]-	630.0 [24.80]	760.0 [29.92]	800.0 [31.5]	-	1729.0 [68.07]	1701.6 [66.99]	-	-
H3	700.0 [27.56]	1745.0 [68.70]	404.0 [15.91]	630.0 [24.80]	500.0 [19.69]	630.0 [24.80]	760.0 [29.92]	800.0 [31.5]	-	1729.0 [68.07]	1701.6 [66.99]	-	-

Frame	H5	D1	D2	D3	D4	D5	D6	S1	S2	S3	Φ1	Φ2	Φ3
H1		45.0 [1.77]	-	-	-	-	-	13.0 [0.51]	26.5 [1.04]	25.0 [0.98]	-	-	-
H2		51.0 [2.00]	38.0 [1.50]	65.0 [2.56]	204.0 [8.03]	68.0 [2.68]	137.0 [5.40]	13.0 [0.51]	26.5 [1.04]	25.0 [0.98]	-	-	-
H3		51.0 [2.00]	38.0 [1.50]	65.0 [2.56]	204.0 [8.03]	68.0 [2.68]	137.0 [5.40]	13.0 [0.51]	26.5 [1.04]	25.0 [0.98]	22.0 [0.87]	34.0 [1.34]	117.5 [4.63]

Frame D0-1

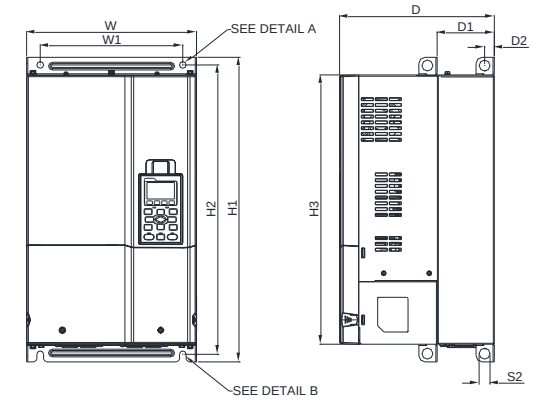

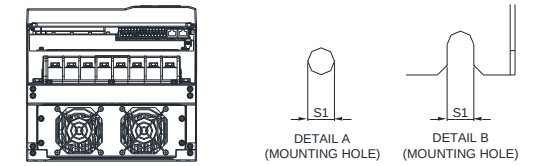

Frame	W¤	H1¤	D¤	W1¤	H2¤	H3¤	D1*¤	D2¤	S1¤	S2¤
D0-1¤	280.0¶ [11.02]¤	500.0¶ [19.69]¤	255.0¶ [10.04]¤	235.0¶ [9.25]¤	475.0¶ [18.70]¤	442.0¶ [17.40]¤	94.2¶ [3.71]¤	16.0¶ [0.63]¤	11.0¶ [0.43]¤	18.0¶ [0.71]¤

Frame D0-2

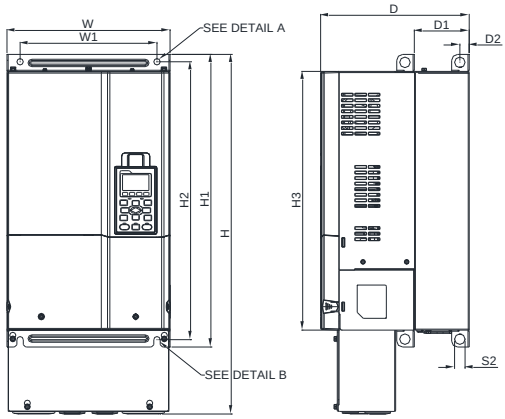

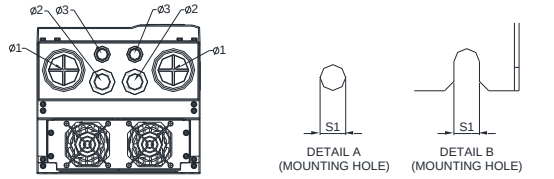

Frame	W¤	H¤	D¤	W1¤	H1¤	H2¤	H3¤	D1*¤	D2¤	S1¤	S2¤	Φ1¤	Φ2¤	Φ3¤
D0-2¤	280.0¶ [11.02]¤	614.4¶ [24.19]¤	255.0¶ [10.04]¤	235.0¶ [9.25]¤	500.0¶ [19.69]¤	475.0¶ [18.70]¤	442.0¶ [17.40]¤	94.2¶ [3.71]¤	16.0¶ [0.63]¤	11.0¶ [0.43]¤	18.0¶ [0.71]¤	62.7¶ [2.47]¤	34.0¶ [1.34]¤	22.0¶ [0.87]¤

Common data VFD-CP

Mains voltage range	VAC	400V_{AC}: 342 - 528
Mains frequency	Hz	47 - 63
Output frequency range	Hz	0 - 599 (≥ 90 kW: 0 - 400)
Output voltage range	V	0 - Mains
Operating		
Temperature	°C	UL Type 1/NEMA1: -10 - +40 UL Open Type: -10 - +50
Atmospheric pressure	kPa	86 - 106
Relative humidity	%	≤ 90 (non-condensing, non-frozen)
Installation location	%	IEC60364-1/60664-1: Pollution degree 2, Indoor use only
Installation position		±10° to vertical axis
Pollution level		IEC721-3-3: 3C3, 3S2
Storage		
Temperature	°C	-25 - +70
Atmospheric pressure	kPa	86 - 106
Relative humidity	%	≤ 95 (non-condensing, non-frozen)
Pollution level		IEC721-3-3: 1C2, 1S2
Transportation		
Temperature	°C	-25 - +70
Atmospheric pressure	kPa	70 - 106
Relative humidity	%	≤ 95 (non-condensing, non-frozen)
Pollution level		IEC721-3-3: 2C2, 2S2
Vibration		2 - 13.2 Hz, 1 mm IEC680068-2-6: 13.2 - 55 Hz, 0.7 - 1.0 G 55 - 512 Hz, 1 G
Shock		IEC680068-2-27: ≤ 100kg: 15G 11ms > 100kg: 10G 11ms
Package drop		IEC680068-2-31 ISTA 1A (acc. to weight)
Degree of protection		IP20 (Type -00 >37 kW IP00 at power entry w/o conduit box)

DELTA ELECTRONICS, INC.
ALL RIGHTS RESERVED

Delta reserves the right to make changes without prior notice

Altitude	m	≤1000 derate 2% rated current or 0.5 K per 100 m up to 3000 m		
Keypad		Detachable		
Signal cable section	mm^2	0.13 - 1.3		
Digital inputs	8x MIx	SINK or SOURCE Range Scan time Pull-up (internal) Current (ON) Switching level	Via wiring 24 V_{DC} 0-30 s 3.6 kΩ 3.3 mA (11 V_{DC} switching) NPN ≤ 13 V_{DC} on, ≥ 19 V_{DC} off PNP ≥ 11 V_{DC} on, ≤ 5 V_{DC} off	
STO inputs	STO1-SCM1 STO2-SCM2	Range Current (ON)	24V_{DC} 3,3 mA (11V_{DC} switching)	
Analogue inputs		Accuracy Delay	12 bits 0-20 s	
	AVI1	Range Impedance	0-10 V_{DC} 20 kΩ	/ 0/4-20 mA 250 Ω
	AVI2	Range Impedance	0-10VDC 20kΩ	
	ACI	Range Impedance	0/4-20 mA 250 Ω	/ 0-10 V_{DC} 20 kΩ
Analogue outputs		Accuracy	10 bits	
	AFM1	Range Impedance	0-10 V_{DC} 100 Ω	/ 0/4-20 mA (switch) 100 kΩ
	AFM2	Range Impedance		
Relays	3x	1x Change-over NO: R_A-R_C NC: R_B-R_C	Resistive 3 A / 250 V_{AC} - 5A / 30 V_{DC} Inductive 1.2 A / 250 V_{AC} - 2A / 30 V_{DC} Resistive 3 A / 250 V_{AC} - 3 A / 30 V_{DC} Inductive 1.2A / 250 V_{AC} - 1.2 A / 30 V_{DC}	
		2x Make NO: R_A-R_C	Resistive 3 A / 250 V_{AC} - 5 A / 30 V_{DC} Inductive 1.2A / 250 V_{AC} - 2 A / 30 V_{DC}	
Signal supply	1x	+24 V_{DC} ± 5% / 200 mA		
Potentiometer supply	1x	+10 V_{DC} / 20mA		
Trip memory		Last 6 errors		
Acc/Dec Times	s	0.0 - 6000		
Serial communication	1x RJ45 SG+/SG-	Modbus RS485 COM1 Baud rate Address Mode ASCII Modbus RTU	4800 - 115200 1 - 254 7,N,2 / 7,E,1 / 7,O,1 / 7,E,2 / 7,O,2 / 8,N,1 / 8,N,2 / 8,E,1 / 8,O,1 / 8,E,2 / 8,O,2 8,N,1 / 8,N,2 / 8,E,1 / 8,O,1 / 8,E,2 / 8,O,2	
		BACnet COM1 Baud rate Address	9600 - 76800 1 - 127	

DELTA ELECTRONICS, INC.
ALL RIGHTS RESERVED

Delta reserves the right to make changes without prior notice

Built-in filter

EMC built-in model		Rated current (ND)	Comply with EMC (IEC 61800-3) Class C3		Comply with EMC (IEC 61800-3) Class C2	
Frame	Model		Shielded cable length	Fc	Shielded cable length	Fc
A	VFD007CP4EA-21	3.5	30 m	≤ 8 kHz	10 m	≤ 8 kHz
	VFD015CP4EB-21	4.3				
	VFD022CP4EB-21	5.9				
	VFD037CP4EB-21	8.7				
	VFD040CP4EA-21	14				
	VFD055CP4EB-21	15.5				
	VFD075CP4EB-21	17				
B	VFD110CP4EB -21	20				
	VFD150CP4EB -21	26				
	VFD185CP4EB -21	35		≤ 6 kHz		≤ 6 kHz
C	VFD220CP4EA -21	40				
	VFD300CP4EB -21	47				
	VFD370CP4EB-21	63				

Basic wiring diagram

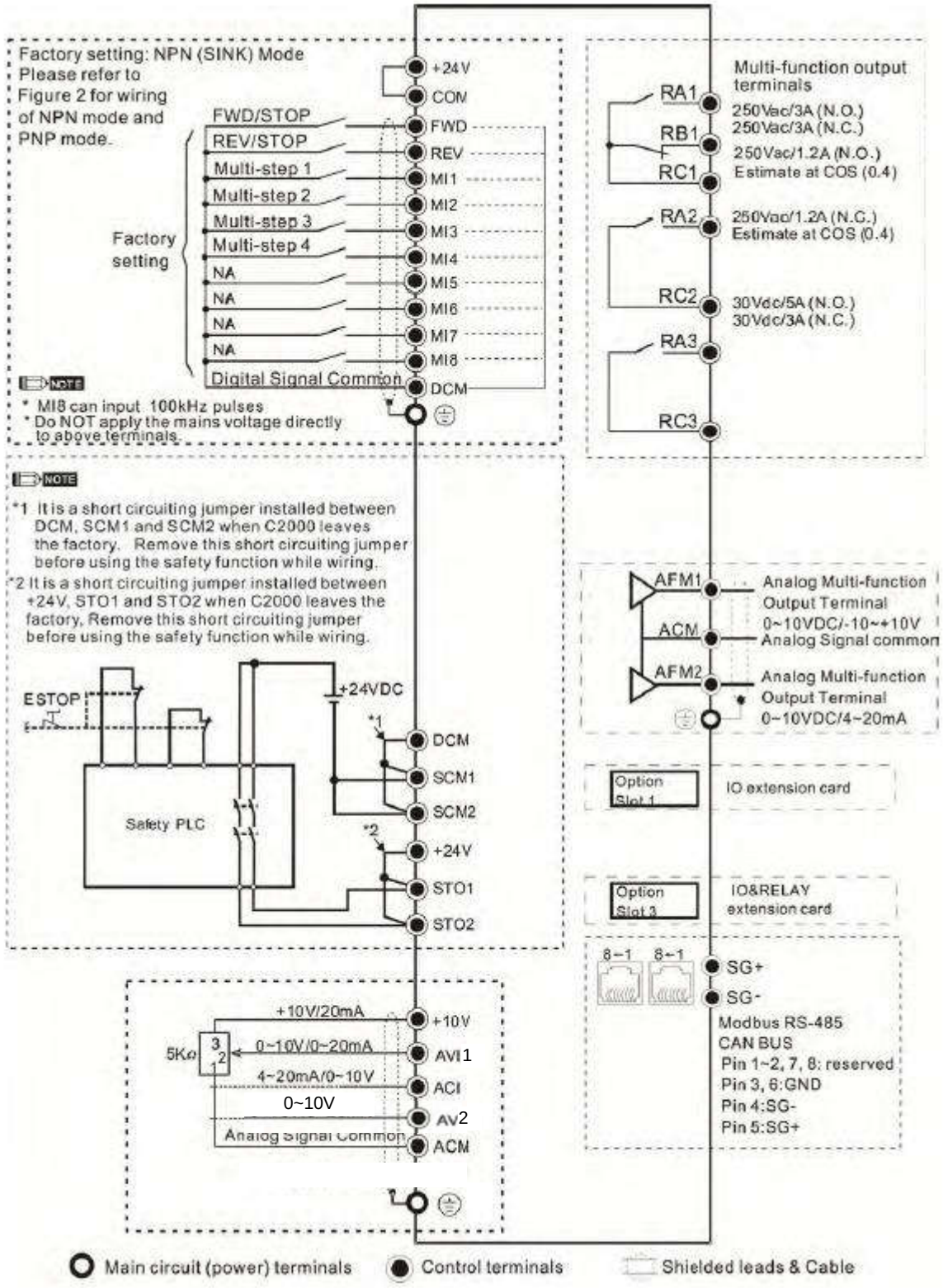

DELTA ELECTRONICS, INC.
ALL RIGHTS RESERVED

Delta reserves the right to make changes without prior notice

Basic wiring diagram Frame A, B, C

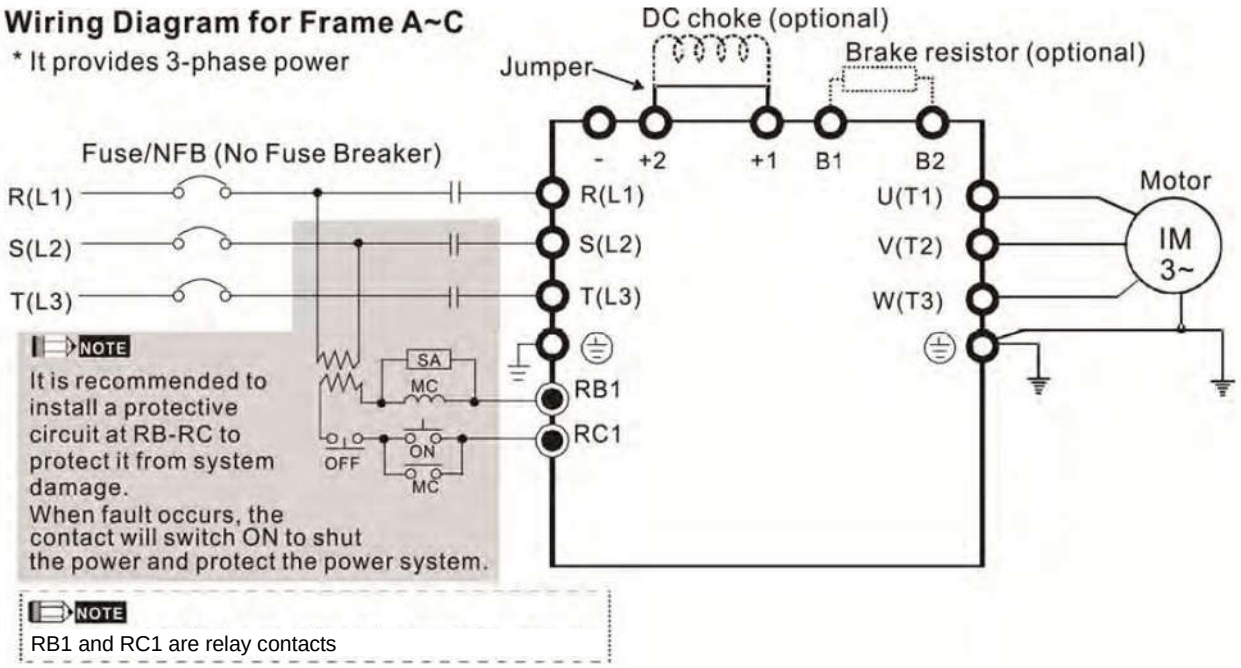

Basic wiring diagram Frame D0 and above

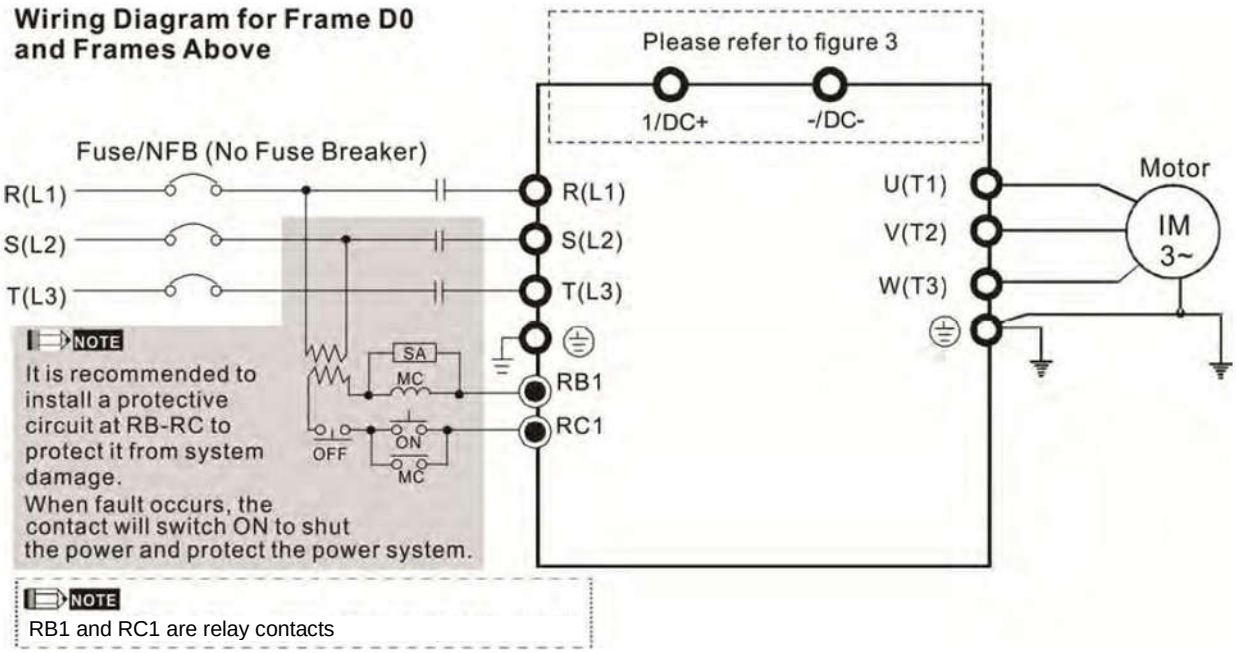

Mains input wiring for Frame G, H

Input power terminals for frame G and H
fuse or NFB(no fuse breaker)

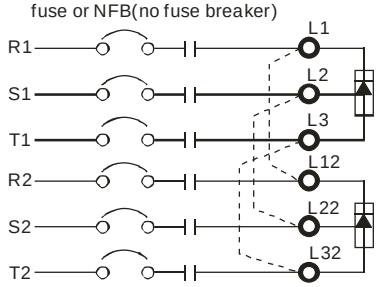

By supplying L1, L2, L3 and L11, L12, L13 from transformer windings that have a 30° phase angle difference, it is possible to reduce the 5th and 7th harmonics.

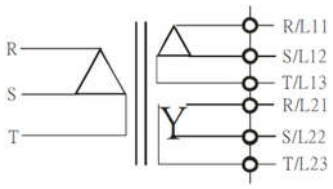

NPN/PNP wiring for MIx

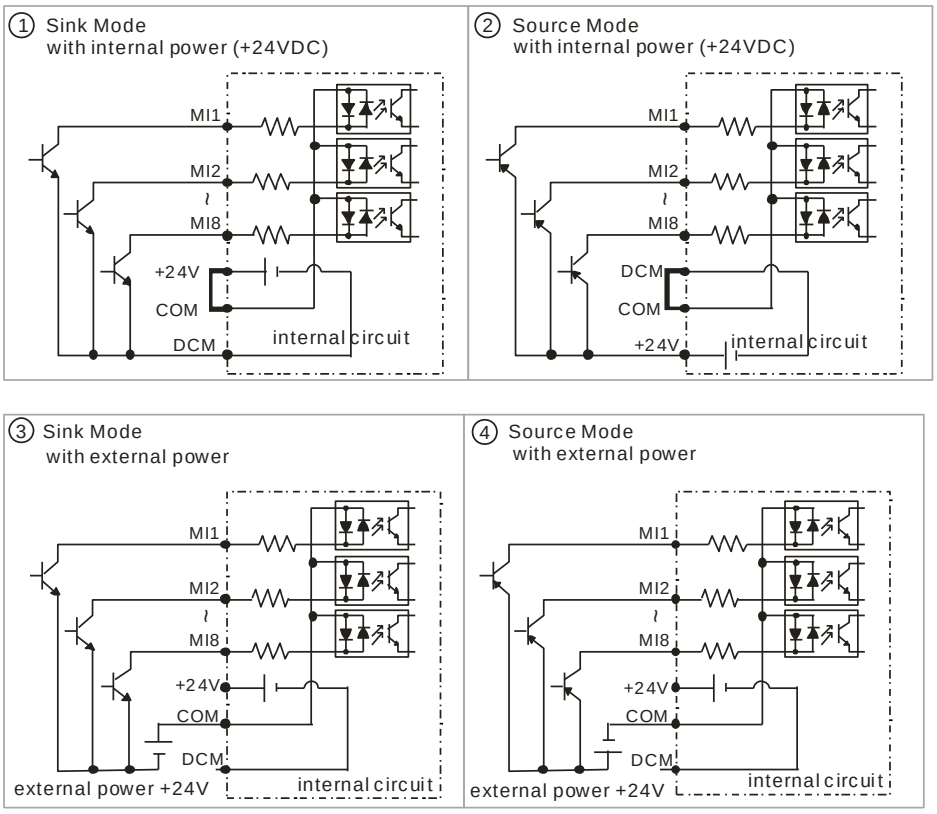

Power terminals (general)

Terminal symbol	Terminal function
R/L1, S/L2, T/L3 L1,L2,L3/L11,L12,L13	Mains input
U/T1, V/T2, W/T3	Motor output
+1 ~ +2	Connection DC-choke (external option)
B1 ~ B2	Brake resistor (external option)
+/DC+ ~ -/DC-	VFDB series Brake unit (external option) or DC-bus connection
⏚	Ground

DELTA ELECTRONICS, INC.
ALL RIGHTS RESERVED

Delta reserves the right to make changes without prior notice

Options

Reactors and EMC Filters For external components see the user manual Chapter 7

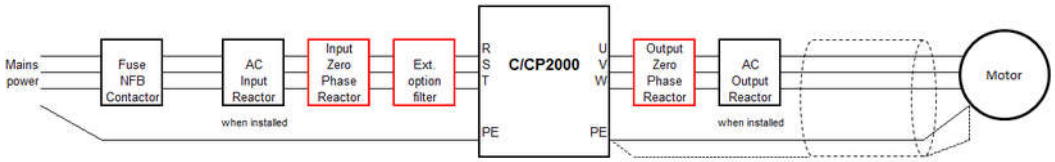

Braking	Brake resistors and VFDB brake units.	
Keypad&Cables	A standard CAT5 cable (no cross) can be used to connect the keypad to the drive. The standard keypad KPC-CC01 is IP56 when mounted on a flat surface.	
Communication	IFD6500/IFD6530 USB-RS485 converter, Splitters, Cables.	
Fieldbus	CMC-DN01	DeviceNet
	CMC-PD01	Profibus
	EMC-COP01	CANopen
	CMC-PN01	Profinet
	CMC-EIP01	Ethernet/IP & Modbus-TCP, 1 port
	CMC-EIP02	Ethernet/IP & Modbus-TCP, 2 ports
	CMC- EC01	EtherCAT
	eZVFD-CC	BACnet IP
Option cards	EMC-R6AA	6 programmable relays (A-C, make).
	EMC-D42A	4 prog. Digital Inputs (PNP/NPN), 2 prog. Digital Outputs.
	EMC-D611A	6 prog. Digital Inputs 115VAC.
	EMC-A22A	2 prog. Analog Inputs (0-10V; 0/4-20mA), 2 prog. Analog Outputs.
	EMC-BPS01	24VDC back up power supply card
Software	To read, save, copy, change parameters download the latest version of DIAStudio from the Delta Download Center www.delta-emea.com.	

Programming

Group 00-xx **Drive Parameters**
Drive ID, Software version, Password, Parameter reset, Control Mode, Duty selection, User-defined display, Carrier frequency, Source of frequency/operation, Stop method, Motor direction inhibit, LD/ND selection, etc.

Group 01-xx **Basic Parameters**
V/f-curve (2), Max/Min Voltage and frequency, Acc/Dec times, Jogging, S-curve, 3 Skip frequencies, etc.

Group 02-xx **Digital In-/Output Parameters**
2-3 Wire operation, Function and setting of digital inputs, outputs and relay, Count values, Debounce time, Brake delay, etc.

Group 03-xx **Analogue In-/Output Parameters**
Function, Gain, Bias, Filtering of analogue inputs and outputs.

Group 04-xx **Multi-step Speed**
15 Speed steps.

Group 05-xx **Motor Parameters**
Setting of motor parameters (2 motors), Auto-tuning, Slip compensation, Torque boost, Y-Δ switch-over, Motor operation time, etc.

Group 06-xx **Protection Parameters**
Protection settings, Fault memory and conditions, PTC, Fire mode, etc.

Group 07-xx **Special Parameters**
Brake level, DC-Braking, Power loss override, DEB, Speed search, Auto reset, Fan control, Emergency stop, Auto Energy Saving, AVR, Slip compensation, Auto restart, etc.

Group 08-xx **PID Control Parameters**
PID settings, Sleep function, etc.

Group 09-xx **Communication Parameters**
Modbus Protocol & Address, BACnet station, Transmission speed, Block Transfer, CANopen, Fieldbus settings, etc.

Group 10-xx **PM motor settings**
Current command, Observer, Angle, etc.

Group 12-xx **Pump parameters: Circulative control**
Settings for circulative control (cascading).

Group 13-xx **Application Parameters**
Parameter grouping for specific applications.

www.delta.com.tw

DELTA ELECTRONICS, INC.
ALL RIGHTS RESERVED

Delta reserves the right to make changes without prior notice