Filter pressure regulator, Series AS3-FRE

R412007216

AVENTICS Series AS3 Air Preparation Units

The AVENTICS Series AS3 is a modular, versatile maintenance unit for universal application. This Series offers compact dimensions, is highly efficient, lightweight and easy-to-use. The AVENTICS Series AS guarantees reliability, safety, and efficiency with a simplified assembly and maintenance efforts.



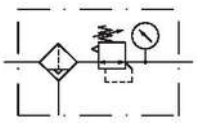

Technical data

Industry	Industrial
Parts	Filter pressure regulator
Reservoir	reservoir, metal, with inspection glass
Port	G 1/2
Nominal flow Qn	5100 l/min
Filter porosity	5 µm
Condensate drain	fully automatic, open without pressure
Pressure gauge	with pressure gauge
Min. working pressure	1.5 bar
Max. working pressure	16 bar
Min. ambient temperature	-10 °C
Max. ambient temperature	50 °C
Min. regulation range	0.5 bar
Max. regulation range	8 bar
Lock type	for padlocks
Type	1-part
Type	Can be assembled into blocks
Pressure supply	single
Mounting orientation	vertical

Filter pressure regulator, Series AS3-FRE

R412007216

Regulator type	Diaphragm-type pressure regulator
Regulator function	with relieving air exhaust
Filter element	exchangeable
Filter reservoir volume	49 cm³
Max. achievable compressed air class acc. to ISO 8573-1:2010	6 : 7 : -
Medium	Compressed air Neutral gases
Weight	0.922 kg

Material

Housing material	Polyamide
Seal material	Acrylonitrile butadiene rubber
Material front plate	Acrylonitrile butadiene styrene
Material threaded bushing	Die cast zinc
Material reservoir	Die cast zinc
Material filter insert	Polyethylene
Part No.	R412007216

Technical information

The pressure dew point must be at least 15 °C less than ambient and medium temperature and may not exceed 3 °C.

A change in the flow direction (from air supply on the left to air supply on the right) occurs by rotating installation by 180° about the vertical axis. Please see the operating instructions for further details.

Also suitable for separation of fluid oil or water due to the design.

Nominal flow Qn with secondary pressure p2 = 6 bar at Δp = 1 bar

Pressure gauge enclosed separately

Filter pressure regulator, Series AS3-FRE

R412007216

Dimensions in mm

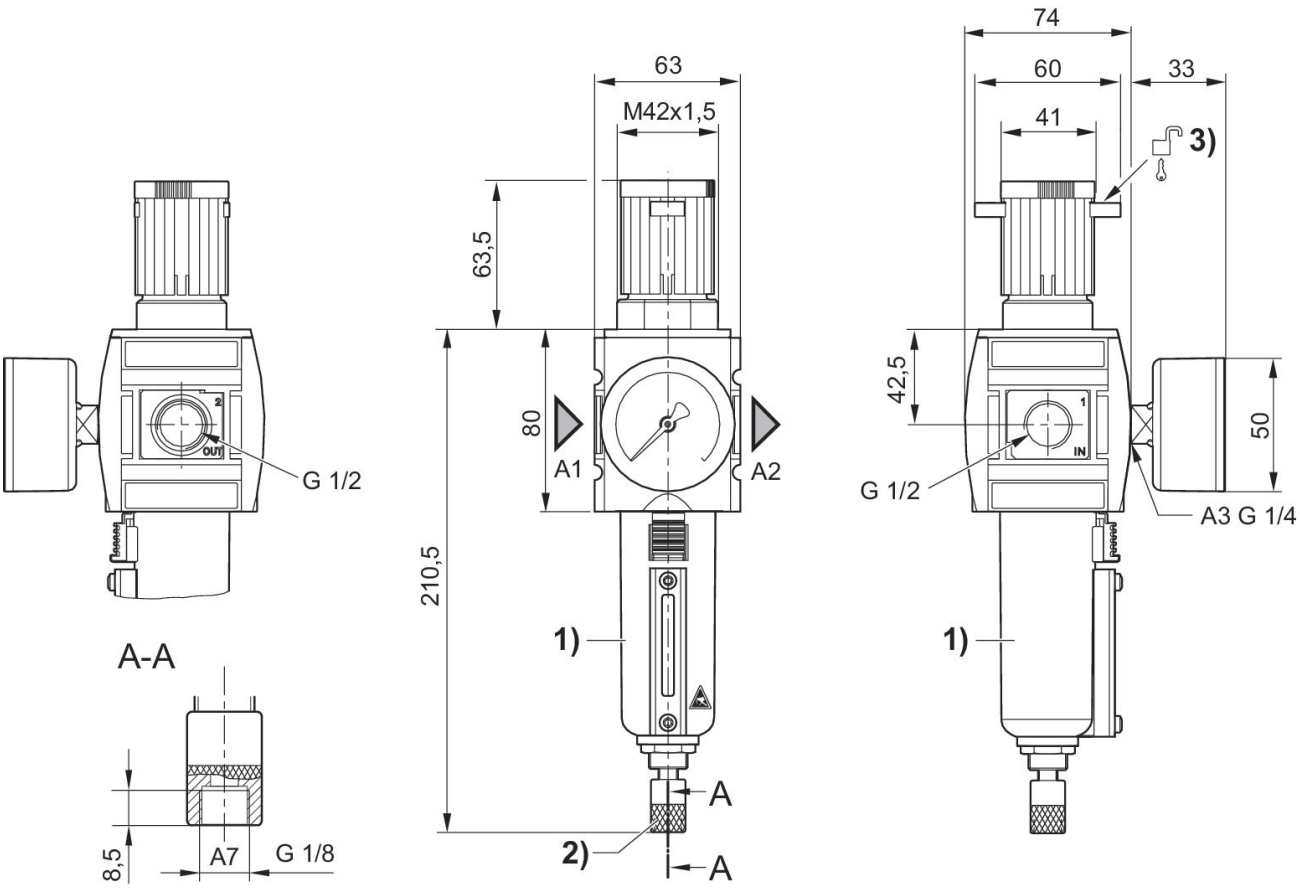

A1 = input
A2 = output
A3 = pressure gauge connection
A7 = condensate drain
1) Metal reservoir with level indicator
2) Fully automatic condensate drain
3) Mounting option for padlocks, max. shackle Ø 8

Pressure characteristics curve

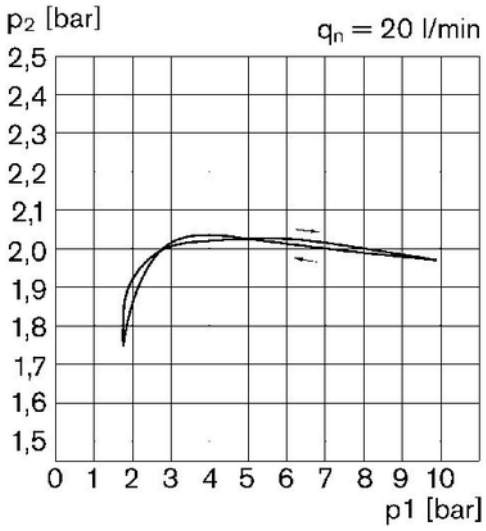

p1 = Working pressure
p2 = Secondary pressure
qn = Nominal flow

Flow rate characteristic (p2: 0,5 - 8 bar)

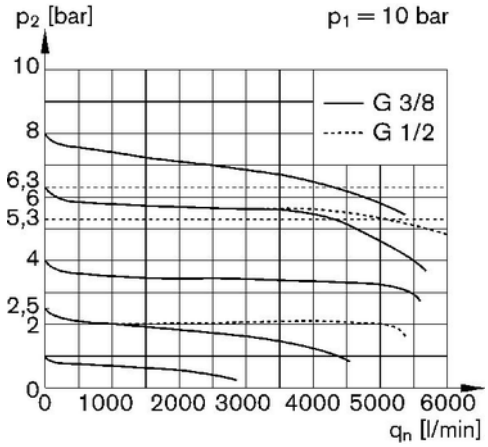

p1 = Working pressure
p2 = Secondary pressure
qn = Nominal flow

Filter pressure regulator, Series AS3-FRE

R412007216

Accessories overview

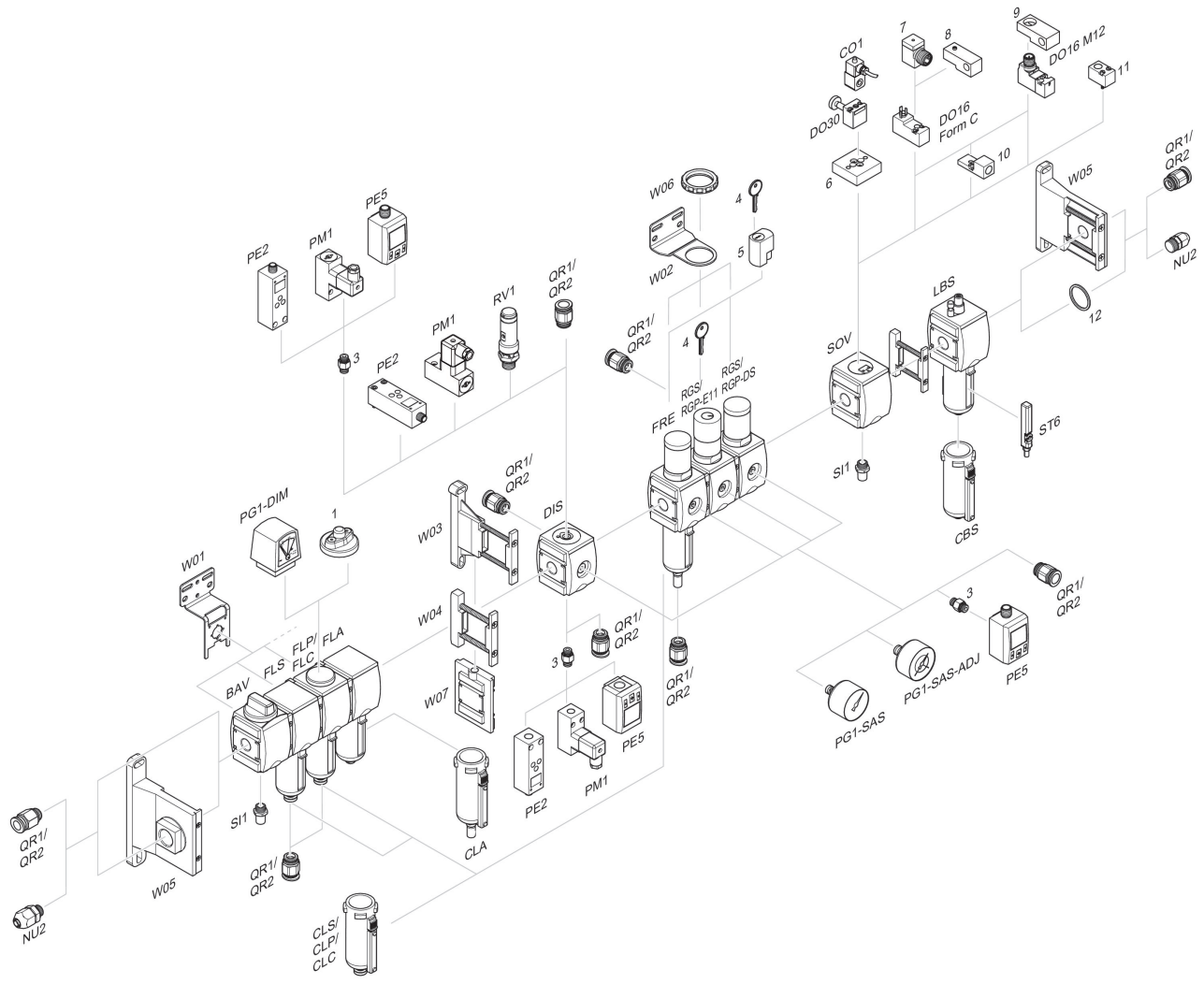

1 = contamination display 3 = Double nipple 4 = Key for E11 locking 5 = mortise lock 6 = Transition plate DO30 7 = Adapter, Series CON-VP 8 = Mounting aid DO16, form C 9 = Mounting aid DO16, M12 10 = Adapter for external pilot air 11 = Adapter pneumatic operation 12 = Sealing ring