## Top View of Assembly

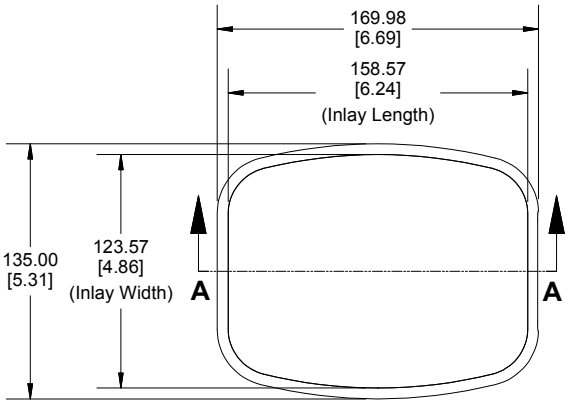


## End View of Assembly

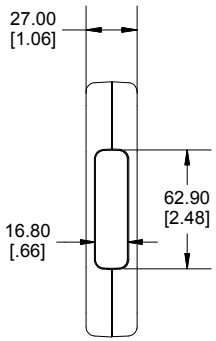


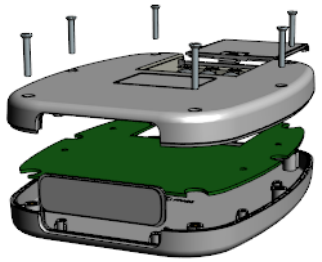

## SECTION A-A
## (Side View of Assembly)

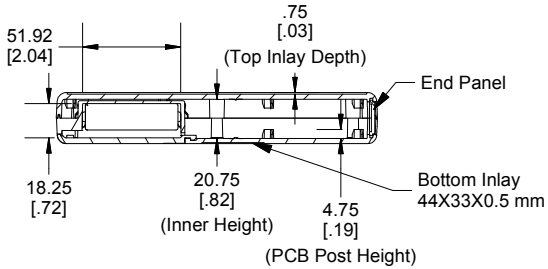


## Removable Panel

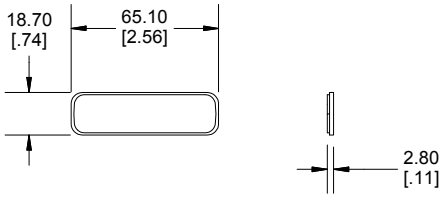


## Inside View Bottom

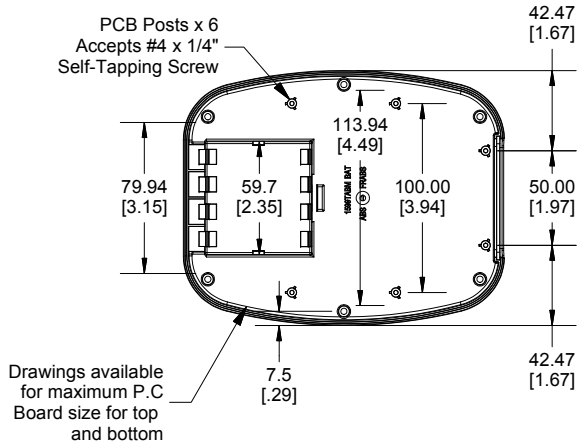


## Inside View Top

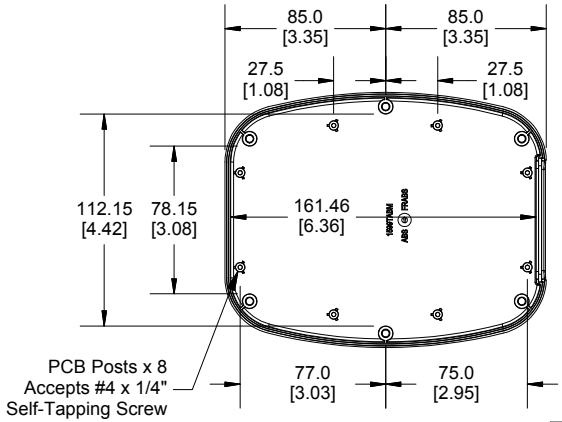


Enclosures can be Factory Modified ( Milling, Drilling, Printing etc.)
Contact Factory mjm@hammondmfg.com for quotes
Solid models of this enclosure available in STEP or IGES.

| NOTE |
|---|
| Enclosure molded from FR ABS (UL94-V0) plastic. |
| Purchased assembly includes top and bottom cover, 1 removable panel, battery door, battery spring clips (8 pcs), 9V adapter (2 pcs) and 6 cover screws (M3-0.5 x 18mm) . M3 Brass inserts are installed for cover screws. (P.C. Board not supplied) |

**PART NUMBERS**

| 1599TABMBAT Enclosure | |
|---|---|
| Black Enclosure | 1599TABMBKBAT |
| Grey Enclosure | 1599TABMGYBAT |
| **ACCESSORIES** | |
| Replacement Cover Screws (Pkg 100) | 1594MS100 (Silver)<br>1594MS100BK (Black) |
| P.C. Board Screws | 1593ATS50 (Pkg 50)<br>1593ATS100 (Pkg 100) |

**Dimensions:**
mm
[inches]

HAMMOND MANUFACTURING™

# 1599TABMBAT

www.hammondmfg.com