FLIP GUARD FOR PUSHBUTTONS

MAINTAINED OR MOMENTARY ACTION FLIP GUARD

The FG Flip Guard assembly offers a maintained or momentary actuation for pushbutton switches with a 15/32 threaded bushing. The FG flip guard's main feature is a spring-loaded cover that locks in either an open or closed position. In the open position the switch operates freely; in the closed position the switch is protected from accidental operation. The momentary open option prevents the guard from remaining in an open position, reducing the chance of accidental actuation. The flip guard is easily installed from the front panel and offers an optional D-flat or mounting tabs to prevent any rotation during assembly.



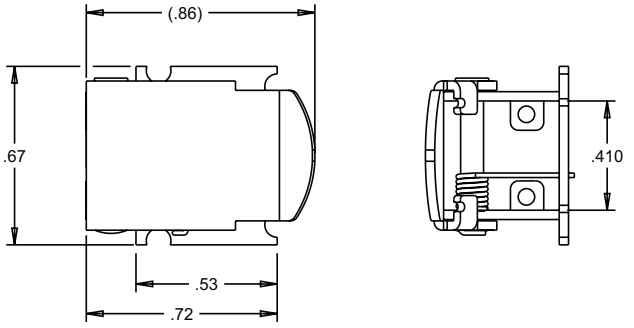

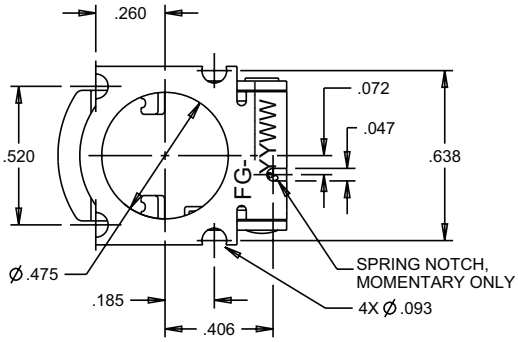

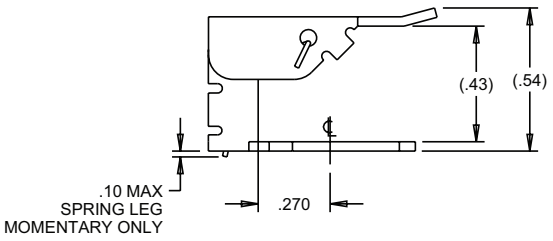

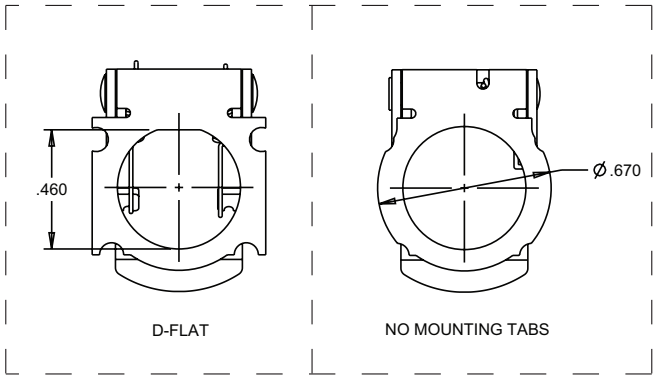

FG PART NUMBER CODE

FG – X X X X X X

Actuation	Cover	Label	Base Style	Orientation	Flip Guard Color
1. Maintained	**1.** Flat	**1.** None	**1.** Mounting Tabs	**1.** None	**1.** Red
2. Momentary			**2.** No Mounting Tabs	**2.** D-Flat	**2.** Black