REVISION HISTORY			
REV	DATE	BY	DESCRIPTION
G	17OCT2014	CMS/BGL	PRN: P2014-2091

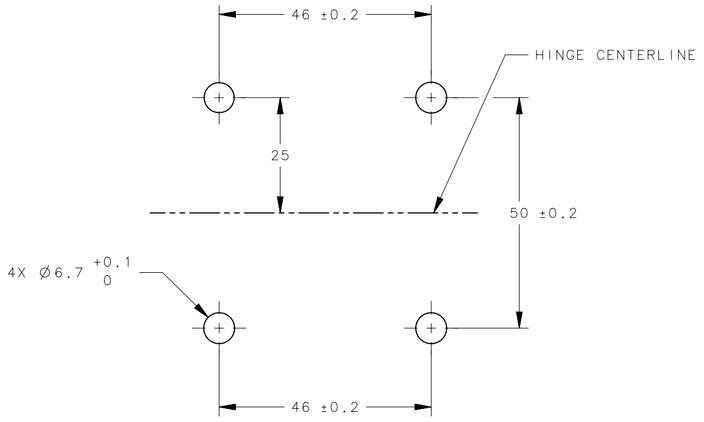

PANEL PREPARATION

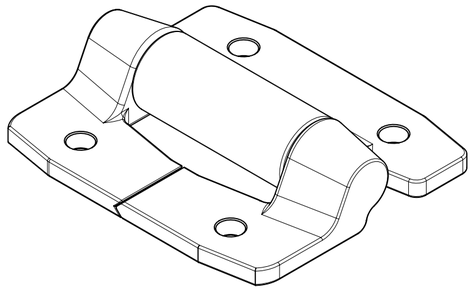

SCALE 1:1

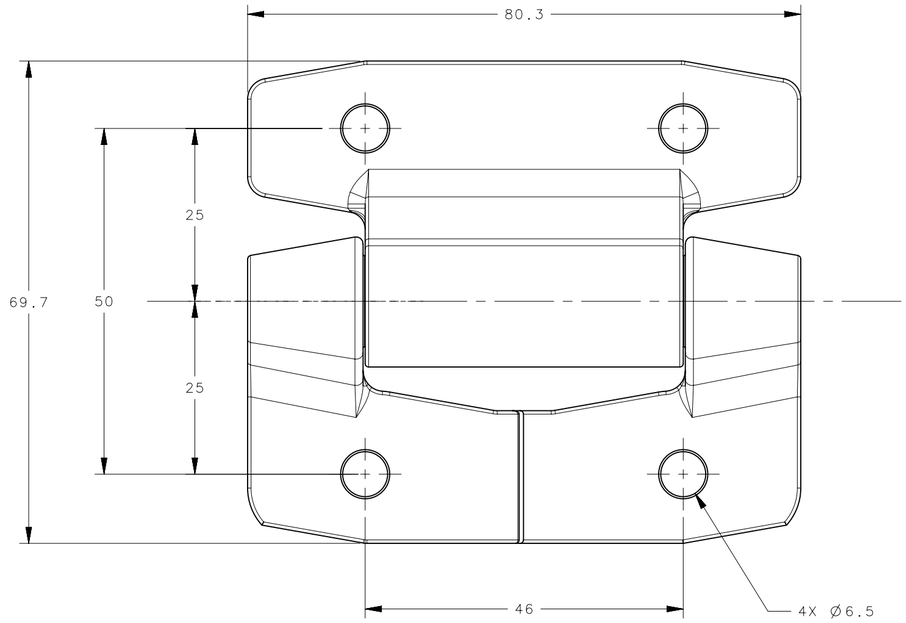

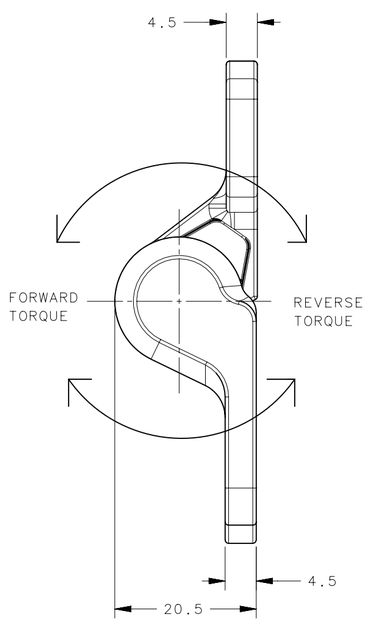

PART NUMBER	FORWARD TORQUE	REVERSE TORQUE
E6-10-600-50	FREE OPERATING	
E6-10-620S-50	2.3 N-m (20.0 in-lbf) ±20%	
E6-10-635S-50	3.9 N-m (35.0 in-lbf) ±15%	
E6-10-650S-50	5.7 N-m (50.0 in-lbf)	
E6-10-665S-50	7.3 N-m (65.0 in-lbf)	
E6-10-680S-50	9.0 N-m (80.0 in-lbf)	
E6-10-620F-50	2.3 N-m (20.0 in-lbf) ±20%	1.7 N-m (14.9 in-lbf) REF
E6-10-635F-50	3.9 N-m (35.0 in-lbf) ±15%	3.0 N-m (26.7 in-lbf) REF
E6-10-650F-50	5.7 N-m (50.0 in-lbf)	4.0 N-m (35.7 in-lbf) REF
E6-10-665F-50	7.3 N-m (65.0 in-lbf)	5.4 N-m (47.5 in-lbf) REF
E6-10-680F-50	9.0 N-m (80.0 in-lbf)	6.7 N-m (59.4 in-lbf) REF
E6-10-695F-50	10.7 N-m (95.0 in-lbf)	7.8 N-m (68.9 in-lbf) REF
E6-10-6110F-50	12.4 N-m (110.0 in-lbf)	9.0 N-m (79.8 in-lbf) REF
E6-10-620R-50	1.7 N-m (14.9 in-lbf) REF	2.3 N-m (20.0 in-lbf) ±20%
E6-10-635R-50	3.0 N-m (26.7 in-lbf) REF	3.9 N-m (35.0 in-lbf) ±15%
E6-10-650R-50	4.0 N-m (35.7 in-lbf) REF	5.7 N-m (50.0 in-lbf)
E6-10-665R-50	5.4 N-m (47.5 in-lbf) REF	7.3 N-m (65.0 in-lbf)
E6-10-680R-50	6.7 N-m (59.4 in-lbf) REF	9.0 N-m (80.0 in-lbf)
E6-10-695R-50	7.8 N-m (68.9 in-lbf) REF	10.7 N-m (95.0 in-lbf)
E6-10-6110R-50	9.0 N-m (79.8 in-lbf) REF	12.4 N-m (110.0 in-lbf)

NOTES:

1. PERFORMANCE TORQUE TOLERANCE ±20% OVER 20,000 CYCLES
2. DESIGNED TO ACCEPT M6 SCREW OR EQUIVALENT
3. MATERIAL AND FINISH:
   HINGE LEAVES AND HOUSING: ALUMINUM ALLOY, BLACK POWDER COAT
   SHAFT, PIN & TORQUE ELEMENTS: STEEL
   O-RINGS: BUNA-N RUBBER
   BEARINGS: BRASS
   BUSHINGS: ZINC ALLOY

THIRD ANGLE PROJECTION

MILLIMETERS [IN]

TOLERANCES UNLESS OTHERWISE NOTED

ALL DIMENSIONS WITHOUT TOLERANCES ARE FOR REFERENCE ONLY.

PER ASME Y14.5M-1994

SURFACE AREA

VOLUME

PROPRIETARY ITEM
EXCEPT FOR USES EXPRESSLY GRANTED IN WRITING, INFORMATION DISCLOSED HEREON IS CONFIDENTIAL AND ALL RIGHTS, PATENT AND OTHERWISE, ARE RESERVED BY SOUTHCO, INC.

southco®
CONNECT·CREATE·INNOVATE

DESCRIPTION: HINGE - CONSTANT TORQUE

SIZE	SYSTEM	DWG NO.
C	NX	J-E6-10-680

DRAWN BY	DATE	SCALE	SHEET
JJT	08FEB2012	1.5:1	1 OF 1