The Timken Company
4500 Mt Pleasant St. NW
N. Canton, OH 44720
Phone: (234) 262-3000
E-Mail: CustomerCAD@timken.com • **Web site:** www.timken.com

Timken Part Number LM300849 - LM300811, Tapered Roller Bearings - TS (Tapered Single) Imperial

This is the most basic and most widely used type of tapered roller bearing. It consists of two main separable parts: the cone (inner ring) assembly and the cup (outer ring). It is typically mounted in opposing pairs on a shaft.



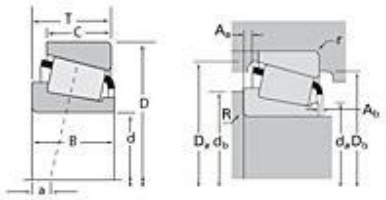

Specifications | Dimensions | Abutment and Fillet Dimensions | Basic Load Ratings | Factors

Specifications

Series	LM300800
Cone Part Number	LM300849
Cup Part Number	LM300811
Design Units	Imperial
Bearing Weight	0.50 lb 0.200 Kg
Cage Type	Stamped Steel

Dimensions

d - Bore	1.6137 in 40.988 mm
D - Cup Outer Diameter	2.6762 in 67.975 mm

B - Cone Width	0.7087 in 18.001 mm
C - Cup Width	0.5315 in 13.500 mm
T - Bearing Width	0.6890 in 17.501 mm

Abutment and Fillet Dimensions

R - Cone Backface "To Clear" Radius[1]	0.14 in 3.560 mm
r - Cup Backface "To Clear" Radius[2]	0.060 in 1.52 mm
da - Cone Frontface Backing Diameter	1.79 in 45.47 mm
db - Cone Backface Backing Diameter	2.05 in 52.07 mm
Da - Cup Frontface Backing Diameter	2.60 in 66.00 mm
Db - Cup Backface Backing Diameter	2.40 in 60.96 mm
Ab - Cage-Cone Frontface Clearance	0.08 in 2 mm
Aa - Cage-Cone Backface Clearance	0.01 in 0.3 mm
a - Effective Center Location[3]	-0.14 in -3.60 mm

Basic Load Ratings

C90 - Dynamic Radial Rating (90 million revolutions)[4]	3440 lbf 15300 N
C1 - Dynamic Radial Rating (1 million revolutions)[5]	13300 lbf 59100 N
C0 - Static Radial Rating	14300 lbf 63500 N
C_{a90} - Dynamic Thrust Rating (90 million revolutions)[6]	2050 lbf 9140 N

Factors

K - Factor[7]	1.68
e - ISO Factor[8]	0.35
Y - ISO Factor[9]	1.72
G1 - Heat Generation Factor (Roller-Raceway)	22.5
G2 - Heat Generation Factor (Rib-Roller End)	18.1
Cg - Geometry Factor	0.0698

[1] These maximum fillet radii will be cleared by the bearing corners.
[2] These maximum fillet radii will be cleared by the bearing corners.
[3] Negative value indicates effective center inside cone backface.
[4] Based on 90 x 10^6 revolutions L_{10} life, for The Timken Company life calculation method. C_{90} and C_{a90} are radial and thrust values.
[5] Based on 1 x 10^6 revolutions L_{10} life, for the ISO life calculation method.
[6] Based on 90 x 10^6 revolutions L_{10} life, for The Timken Company life calculation method. C_{90} and C_{a90} are radial and thrust values for a single-row, $C_{90(2)}$ is the two-row radial value.
[7] These factors apply for both inch and metric calculations. Consult your Timken representative for instruction on use.
[8] These factors apply for both inch and metric calculations. Consult your Timken representative for instruction on use.
[9] These factors apply for both inch and metric calculations. Consult your Timken representative for instruction on use.

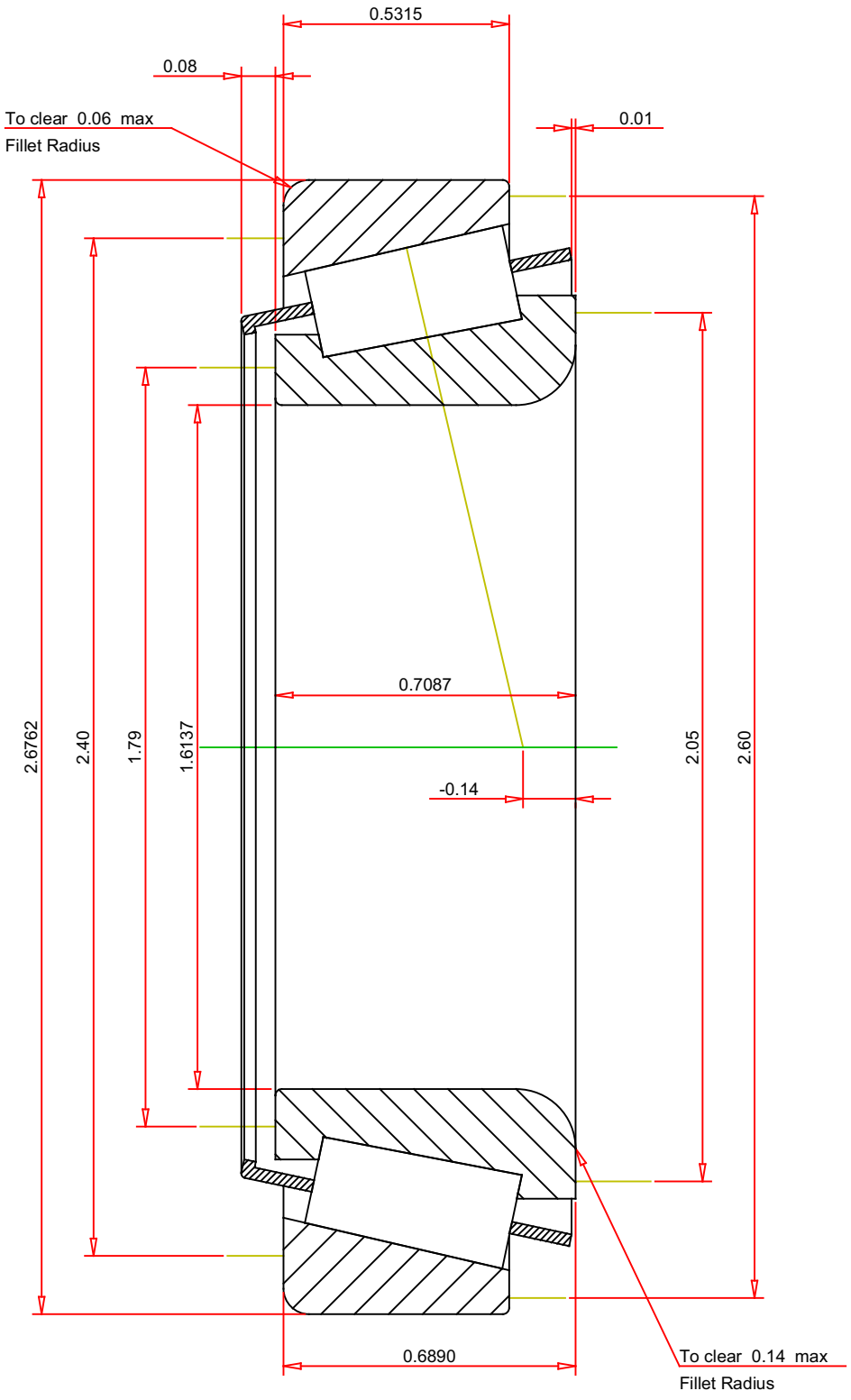

IMPERIAL UNITS

ISO Factor - e	0.35	
ISO Factor - Y	1.72	
Bearing Weight	0.5	lb
Number of Rollers Per Row	22	
Effective Center Location	-0.14	inch

TIMKEN®

THE TIMKEN COMPANY
NORTH CANTON, OHIO USA

LM300849 - LM300811
TS BEARING ASSEMBLY

K Factor	1.68	
Dynamic Radial Rating - C90	3440	lbf
Dynamic Thrust Rating - Ca90	2050	lbf
Static Radial Rating - C0	14300	lbf
Dynamic Radial Rating - C1	13300	lbf

Every reasonable effort has been made to ensure the accuracy of the information contained in this writing, but no liability is accepted for errors, omissions or for any other reason.

FOR DISCUSSION ONLY