THERMOMETRICS
A COMMITMENT TO EXCELLENCE

ZTP-148SR

Thermopile IR Sensor



Thermometrics Thermopile IR Sensors are used for non-contact surface, or infrared, temperature measurement. The ZTP-148SR Model consists of thermo-elements, flat infrared filter and thermistor for temperature compensation, all in one hermetically-sealed TO-46 (18) sensor package. There are a variety of filters available to maximize performance in specific applications.

Applications

- Ear thermometers
- Forehead thermometers
- Surface temperature measurement of the human body

Features

- Compact design
- High sensitivity
- Fast response time
- Low cost
- Included ambient temperature (thermistor) sensor

Amphenol

Advanced Sensors

ZTP-148SR Specifications

Thermopile Chip

Parameter	Limits			Unit	Condition
	Min	Typ	Max		
Chip Size		1.8 X 1.8		mm^2	
Active Area		1.0×1.0		mm^2	Absorber area
Internal Resistance	60	85	111	kΩ	@25°C
Resistance T.C.			0.12	%/°C	
Responsivity	43	61	79	V/W	500K, 1Hz,
Responsivity T.C.		-0.07		%/°C	
Noise Voltage		37		nV rms	R.M.S, 25°C
NEP		0.61		$nW/Hz^{1/2}$	
Detectivity		1.14		$cmHz^{1/2}/W$	
Time Constant		32		ms	

NTC Thermistor for Temperature Compensation

Parameter	Limits			Unit	Condition
	Min	Typ	Max		
Resistance	97	100	103	kΩ	Tol.:3%, @ 25°C
Beta – Value	3920	3960	4000	K	Tol.:1%, Defined at 25°C/50°C

Absolute Maximum Ratings

- Operating temperature : -20°C ~ 100°C
- Storage temperature : -40°C ~ 120°C

ZTP-148SR Specifications

Typical Characteristic Data

Sensitivity

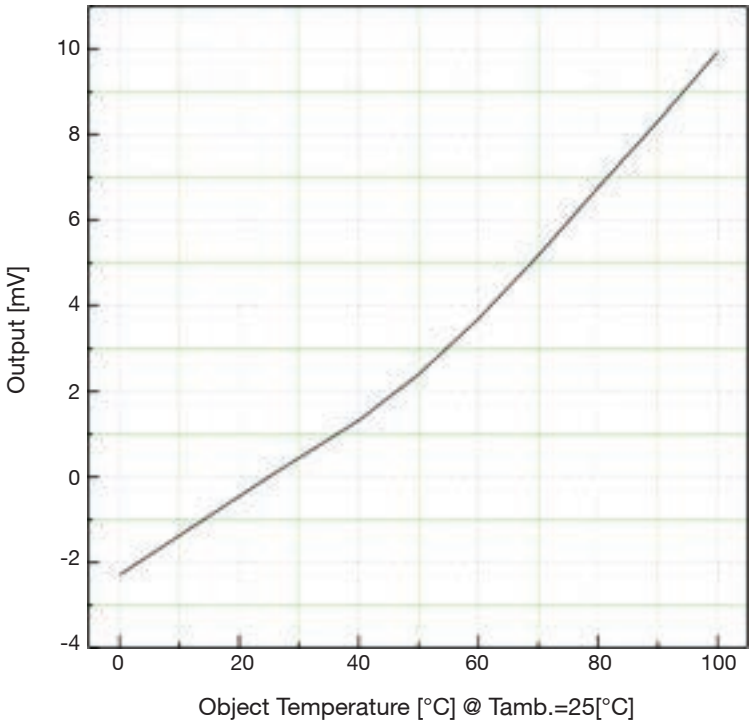

Field of View

Parameter	Limits			Units	Condition
	Min	Typ	Max		
Field of View	80	85	90	Degree	50% of Maximum Output

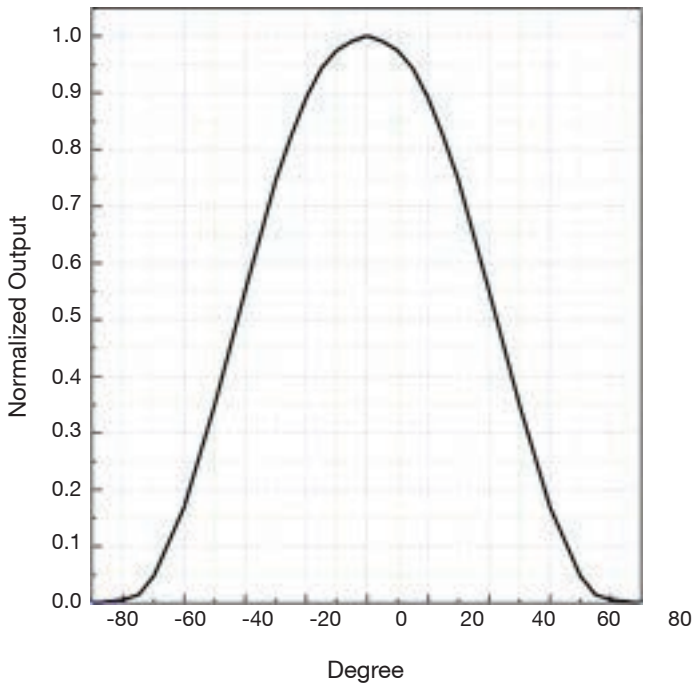

ZTP-148SR Specifications

Thermistor Resistance

Tambient (kΩ)	Rmin (kΩ)	Rcent (kΩ)	Rmax (kΩ)
-20	893.8	942.3	992.6
-15	677.7	712.5	748.4
-10	518.2	543.3	569.2
-5	399.4	417.6	436.4
0	310.1	323.5	337.1
5	242.6	252.4	262.4
10	191.1	198.3	205.7
15	151.5	156.9	162.3
20	120.9	124.9	128.9
25	97.00	100.0	103.0
30	77.97	80.55	83.15
35	63.03	65.25	67.50
40	51.22	53.14	55.09
45	41.85	43.50	45.18
50	34.36	35.79	37.24
55	28.35	29.58	30.84
60	23.49	24.56	25.66
65	19.56	20.49	21.44
70	16.35	17.16	17.99
75	13.73	14.43	15.15
80	11.57	12.18	12.81
85	9.79	10.32	10.88
90	8.313	8.781	9.267
95	7.085	7.495	7.923
100	6.058	6.420	6.796

Transmission Data of Filter

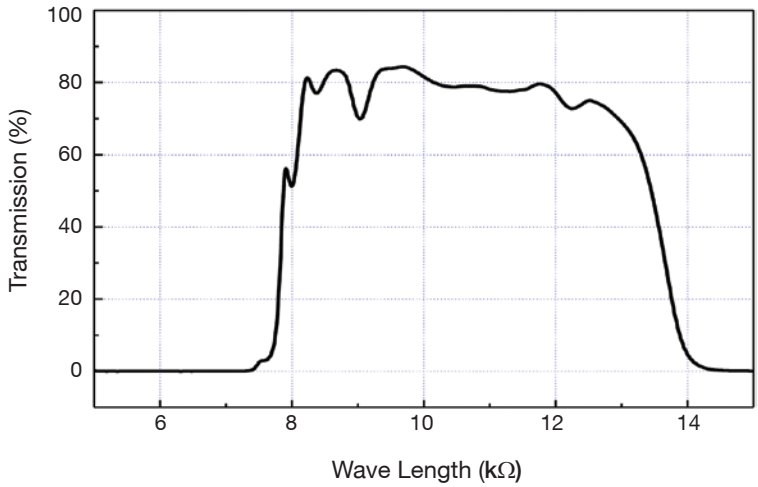

Outline of Sensor Package & PIN Arrangement (unit : mm)

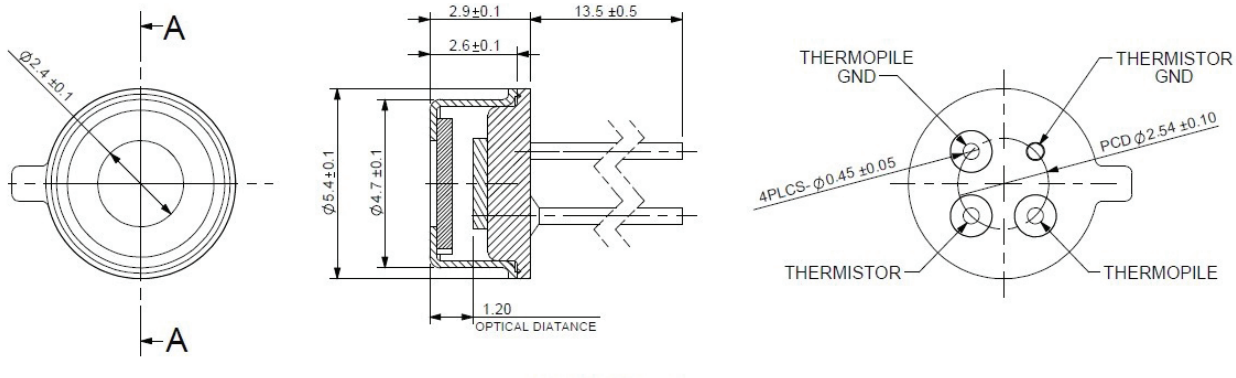

Amphenol

Advanced Sensors

www.amphenol-sensors.com

© 2017 Amphenol Corporation. All Rights Reserved. Specifications are subject to change without notice.
Other company names and product names used in this document are the registered trademarks or trademarks of their respective owners.

AAS-920-698A - 09/2017