Laserliner®

VideoFlex G2 Accessories



Inspection accessory for VideoFlex G2

Rev 1212

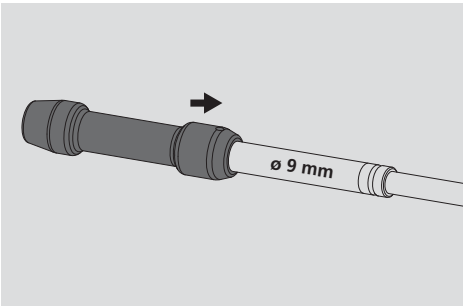

TopGuide G2

– Aluminium **guide sleeve** for mounting on the camera head
– The specially ground sleeve allows for **optimal gliding on uneven surfaces**, for example dirty pipes.
– **Reduces jamming and contamination** of the camera head.
– Suitable for **9 mm camera head**

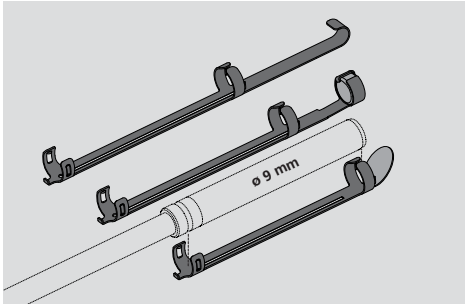

TopClips G2

– **Magnet, mirror and hook attachment** for mounting on camera head
– Suitable for **9 mm camera head**
– **Clip mechanism** for easy attachment and removal

Only for SnakeCamera and FlexCamera.

TECHNICAL DATA
TOPGUIDE G2
MATERIAL aluminium
OUTER DIAMETER 16 mm
TOPCLIPS G2
MATERIAL Spring steel sheet



Guide sleeve for mounting on the camera head



Clip mechanism for easy attachment and removal

ARTICLE	ARTICLE NO.	EAN CODE	PU
TopGuide G2	082.124A	4 021563 683079	2
TopClips G2	082.123A	4 021563 680610	2

ø 9 mm



TopGuide G2

Packing dimension (W x H x D)
90 x 143 x 30 mm

ø 9 mm



TopClips G2

Packing dimension (W x H x D)
90 x 143 x 30 mm

UMAREX GmbH & Co. KG · Donnerfeld 2 · 59757 Arnsberg · Germany · Tel. +49 2932 638-300 · Fax +49 2932 638-333 · laserliner@umarex.de · www.laserliner.com