Modular Static Storage System - Turntable

RS stock no. 561-779

Assembly instructions

Figure 1

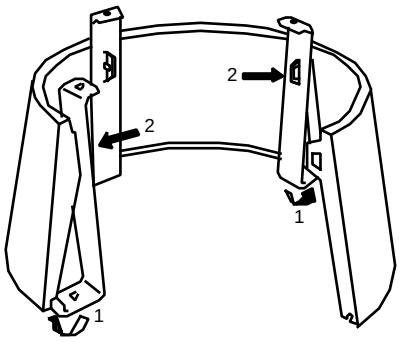

Figure 2

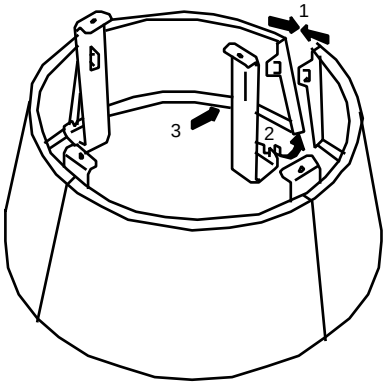

Figure 3

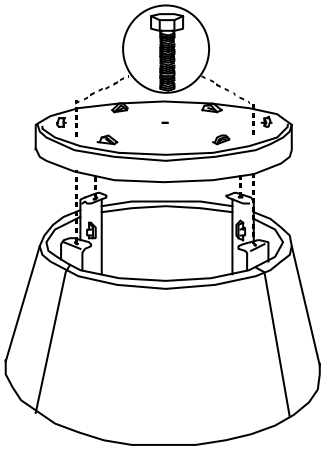

Figure 4

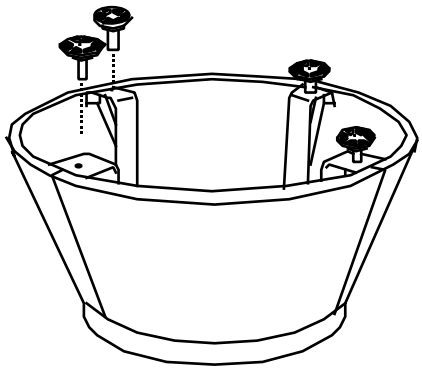

Figure 5

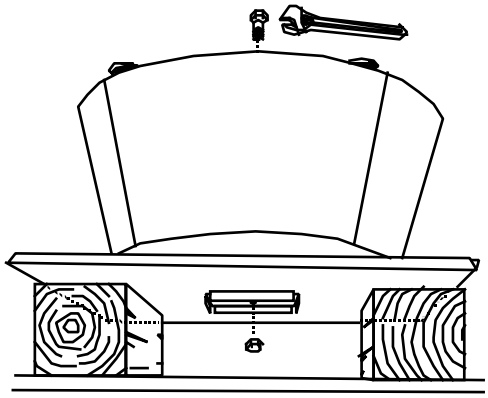

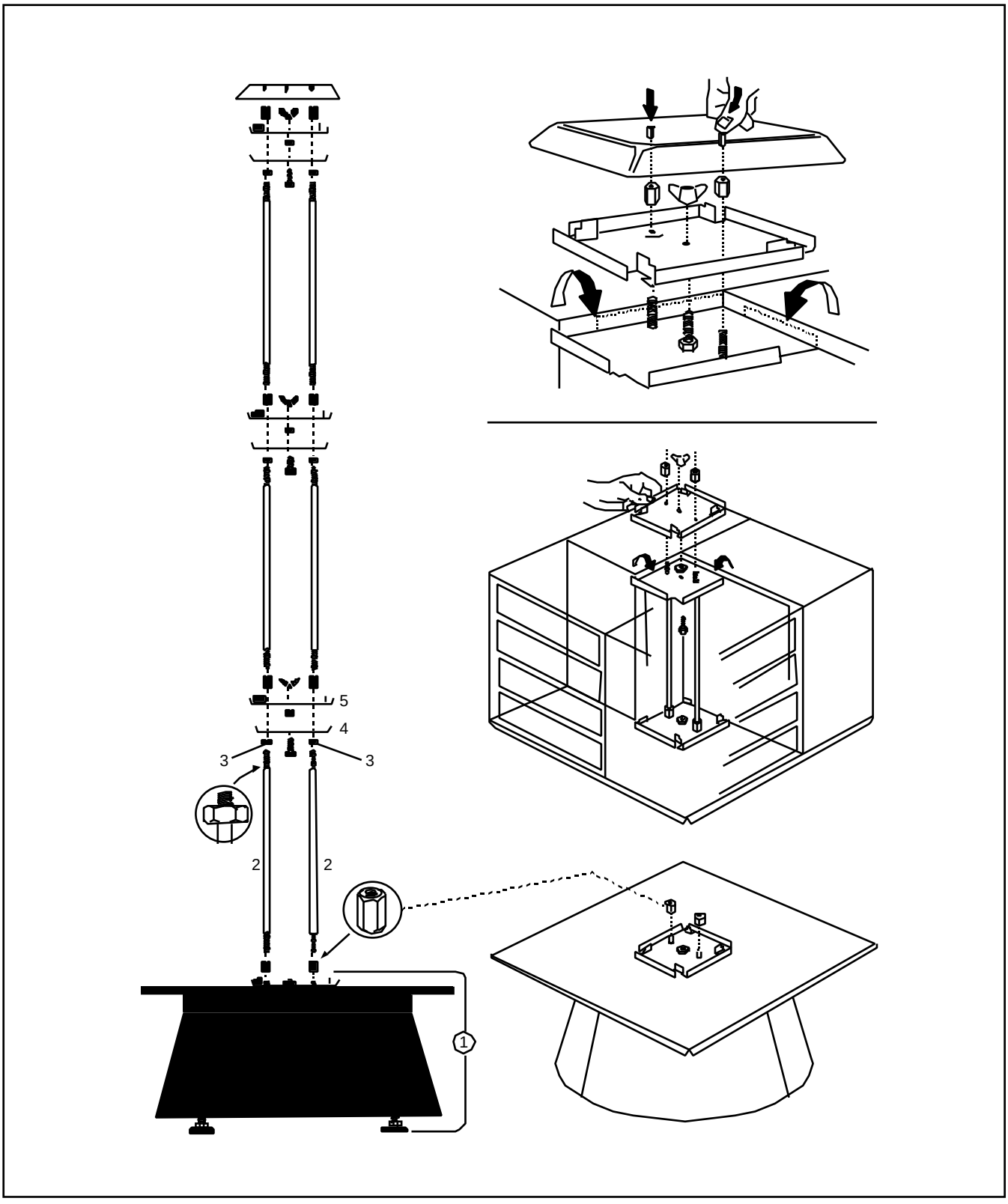

Note: The following points should be observed when assembling and using this turntable.

i) Maximum number of tiers is to be 3 (12 racks).

ii) Each tier should consist of 4 racks.

iii) Fill the bottom racks first.

iv) Ensure that the weight of stored items is evenly distributed throughout the structure. Heavier items should be stored in the lower racks.

RS Components shall not be liable for any liability or loss of any nature (howsoever caused and whether or not due to RS Components' negligence) which may result from the use of any information provided in **RS** technical literature.

RS Components, PO Box 99, Corby, Northants, NN17 9RS
Telephone: 01536 201234
An Electrocomponents Company
© RS Components 1998