1.69.507.145/1402

Signal lamp with integrated filament lamp, 10 mm, arrow-shaped bezel, 28 Volt, bezel yellow, Flat quick-connect terminal 2.8 x 0.8 tin-plated



fields of application

- Measurement-control-regulation
- Electrical engineering
- Mechanical and system engineering
- Signalling systems
- Model construction

special features

- Three shapes: round, square or arrow-shaped
- Integrated luminous element
- Filament lamp, 28 V, color: yellow
- Neon lamp, 230 V, color: red
- Luminous element neon lamp, 230 V, color: green or blue

description

Signal lamps with integrated filament lamp, neon lamp or luminous element neon lamp, mounting hole diameter 10 mm

technical data

general	
Bezel color	yellow
Property of bezel / mushroom	transparent
Bezel shape	arrow-shaped
illuminated	Yes
Packaging unit	10 pcs.
net weight	2.6 g
Degree of protection, front side, according to DIN EN 60529	IP40
MOQ order	50 pcs.
RoHS compliant	Yes
REACH compliant	Yes
mounting diameters	
Mounting hole	10 mm
Mounting depth	30 mm
Installation height	3 mm
mechanical data	
Fixing	Pushing into mounting hole
Solderability	Yes
Terminal on the rear	Flat quick-connect terminal 2.8 x 0.8 tin-plated

direct links

- RAFI eCatalog

The information in this data sheet only contains general descriptions and / or performance features, which may not apply precisely as described to the respective application, and which my change due to further product enhancements. The technical data, illustrations and other information about our products are the mere results of individual technical testing. These descriptions and other product features are only binding if they expressly agreed upon at the time of the conclusion of a binding contract. In all other cases, we reserve the right to make technical changes as well as changes of availability. Pictures and other graphic illustrations are approximations only. All product names may be trademarks or brand names of the RAFI Group or any other sub-supplier of RAFI. The use of such by any third parties for their own purposes may infringe the rights of the respective entity holding those rights.

RAFI GmbH & Co. KG

Ravensburger Str. 128-134
88276 Berg / Ravensburg
Germany
www.rafi-group.com,
info.headquarters@rafi-group.com

electrical data

Operating voltage of the luminous element, max.	28 V

The information in this data sheet only contains general descriptions and / or performance features, which may not apply precisely as described to the respective application, and which my change due to further product enhancements. The technical data, illustrations and other information about our products are the mere results of individual technical testing. These descriptions and other product features are only binding if they expressly agreed upon at the time of the conclusion of a binding contract. In all other cases, we reserve the right to make technical changes as well as changes of availability. Pictures and other graphic illustrations are approximations only. All product names may be trademarks or brand names of the RAFI Group or any other sub-supplier of RAFI. The use of such by any third parties for their own purposes may infringe the rights of the respective entity holding those rights.

RAFI GmbH & Co. KG

Ravensburger Str. 128-134
88276 Berg / Ravensburg
Germany
www.rafi-group.com,
info.headquarters@rafi-group.com

drawings

Dimensioned drawing

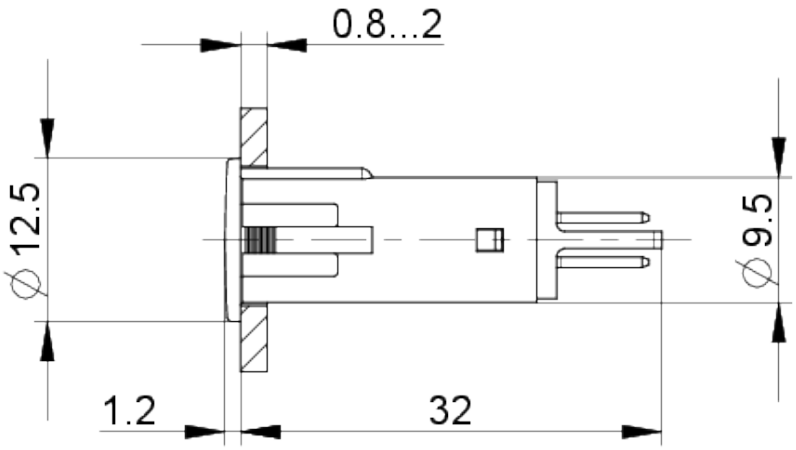

Mounting hole drawing

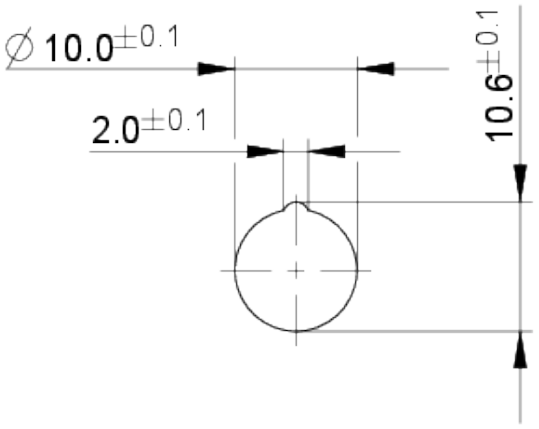

The information in this data sheet only contains general descriptions and / or performance features, which may not apply precisely as described to the respective application, and which my change due to further product enhancements. The technical data, illustrations and other information about our products are the mere results of individual technical testing. These descriptions and other product features are only binding if they expressly agreed upon at the time of the conclusion of a binding contract. In all other cases, we reserve the right to make technical changes as well as changes of availability. Pictures and other graphic illustrations are approximations only. All product names may be trademarks or brand names of the RAFI Group or any other sub-supplier of RAFI. The use of such by any third parties for their own purposes may infringe the rights of the respective entity holding those rights.

RAFI GmbH & Co. KG

Ravensburger Str. 128-134
88276 Berg / Ravensburg
Germany
www.rafi-group.com,
info.headquarters@rafi-group.com