

- **Pressure range up to 2000 bar**
- **High strength, rugged stainless steel design**
- **Competitively priced**

The EPT3100 is a high quality all stainless steel pressure transducer, intended for use in the measurement of gases and liquids compatible with stainless steel.

The EPT3100 is suitable for automotive, industrial hydraulics, refrigeration, off-road, construction and agricultural applications.

With additional EMI / RFI protection, low static and thermal errors and high resistance to shock and vibration as standard, the EPT3100 assures trouble free operation at temperatures up to 125°C. The piezo resistive sensing element coupled with the latest ASIC circuitry, assures excellent accuracy, choice of high level outputs and long stability, protected within a rugged, stainless steel housing.

The EPT3100 high strength stainless steel construction contains no silicone oil and no internal O- rings. Measurements are available in gauge and absolute pressure, with ranges up to 2,000 bar and are backed by a one-year warranty.

Specification		
Performance		
Accuracy @ RT	% of the range (gauge and vacuum sensors) < 0.5 BFSL ≤ 0.125 % of the range (absolute sensors) < 1.0	(incl. nonlinearity, hysteresis, repeatability, zero-offset and final offset acc. to IEC 61298-2)
Non-linearity	% of the range ≤ 0.15	
Repeatability	% of the range ≤ 0.10	
Stability/year	% of the range ≤ 0.10	
Response time	(10..90%) t(ms)1	
Overrange pressure	up to 2x rated pressure	
Burst pressure	up to 5x rated pressure	
Pressure cycles	> 10 million	
Environment		
Temperature [°C]: Measuring medium Ambience Storage Compensated range	 -40...125 -40...105 -40...125 -20...85	
Temperature coefficient within the compensated range:		
Mean TC offset	% of the range ≤ 0,15 / 10K	
Mean TC range	% of the range ≤ 0,15 / 10K	
Shock	1000 G, 11 msec., 1/2 Sine	
Vibration	25 G peak, 20 to 2000 Hz	
Sealing	IP 66, optional IP69K	

Specifications	
Electronics	
Output -> Supply	0 - 10 V -> 12 - 32 VDC 0 - 5 V -> 8 - 32 VDC non ratiometric 1 - 5 V -> 8 - 32 VDC non ratiometric 0.5 - 4.5V -> 5V ratiometric 4 - 20 mA -> 10 - 32 VDC I²C -> 5 VDC
Output impedance	< 100 Ω
Current consumption	< 10 mA
Reverse voltage protection	Yes
Mechanics	
Housing	304 stainless steel
wetted parts	17-4PH stainless steel
Pressure port	see select table
Electrical connection	see select table
Weight	ca. 60 g

Dimensions

Gauge pressure dimensions

Cable assembly

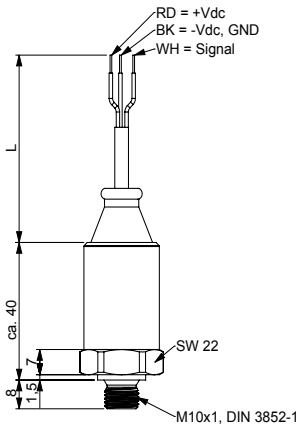

Packard Metripac connector

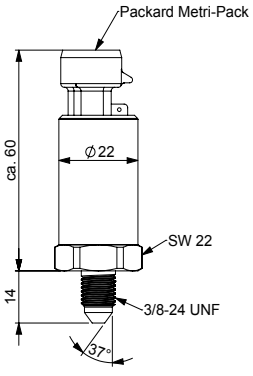

DIN EN 175301-803 connector

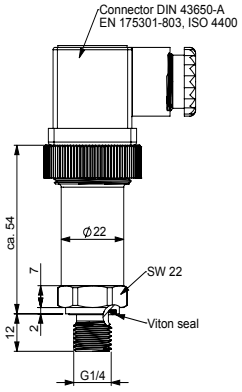

Absolute pressure dimensions

up to 2000 bar

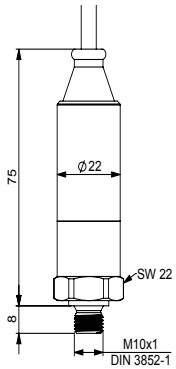

Wiring

Type	Output	PIN 1	PIN 2	PIN 3	PIN 4
 DIN EN 175301- 803-A and C	0.5 - 4.5V , 1 - 5 V , 0 - 10 V	+ Supply	- Supply	Output +	-
	4..20mA	+ Supply	Current output -	N/A	-
	I²C	N/A	N/A	N/A	-
 Round connector M12x1 A	0.5 - 4.5V , 1 - 5 V , 0 - 10 V	+ Supply	N/A	- Supply	Output +
	4..20mA	+ Supply	N/A	Current output -	N/A
	I²C	1 | V+	2 | V-	3 | SCL	4 | SDA
 Packard Metripac	Output	PIN A	PIN B	PIN C	-
	0.5 - 4.5V , 1 - 5 V , 0 - 10 V	- Supply	+ Supply	Output +	-
	4..20mA	Current output -	+ Supply	N/A	-
	I²C	N/A	N/A	N/A	-
Cable assembly	Output	Red	Black	White	Green
	0.5 - 4.5V , 1 - 5 V , 0 - 10 V	+ Supply	- Supply	Output +	-
	4..20mA	+ Supply	Current output -	N/A	-
	I²C	V+	V-	SCL	SDA

Ordering Information

The following models are typically available from stock:

EPT3100-A-00600-B-2-F	EPT3100-C-01000-B-5-A	EPT3100-H-01000-B-5-A	EPT3100-M10x1-01000-B-5-A
EPT3100-A-00600-B-4-F	EPT3100-C-01000-B-5-C	EPT3100-H-01000-B-5-C	EPT3100-M10x1-10000-B-5-A
EPT3100-A-01000-B-1-F	EPT3100-C-01700-B-5-C	EPT3100-H-01600-B-5-C	EPT3100-M10x1-16000-B-5-A
EPT3100-A-01000-B-2-F	EPT3100-C-(-1/+4bar)-B-5-C	EPT3100-H-06000-B-4-A	
EPT3100-A-02500-B-2-F	EPT3100-C-(-1...7bar)-B-5-C	EPT3100-H-10000-B-5-A	
EPT3100-A-10000-B-2-F	EPT3100-C-100PSI-B-5-C	EPT3100-H-16000-B-4-A	
EPT3100-A-16000-B-1-D	EPT3100-C-500PSI-B-5-C	EPT3100-H-16000-B-5-A	
EPT3100-A-25000-B-2-F	EPT3100-C-2000PSI-B-5-C	EPT3100-H-2400 PSI-B-3-A	
EPT3100-A-40000-B-2-F		(Range 0 to 2400PSI)	

Ordering information

(Please use the characters in the chart below to create your product code)

Sample Code EPT3100 - A - 01000 - B - 4 - A

Port Configuration

A	G 1/4" male (standard)
B	1/4 " NPT (standard)
C	1/8" NPT Male
D	7/16" 20 UNF Male
E	9/16" 18 UNF Male
F	M14x1.5 Male
G	1/4" SAE Female ≙7/16" UNF Female incl. Schrader opener
H	3/8x24 UNF Male (Dash Size 3)
M10	M10x1 male up to 600 bar

Pressure Range

See table below*

Pressure Unit

A	Absolute Pressure (Only available from 6 bar upwards)
B	Gauge Pressure
V	Vacuum Pressure

Output Signal

1	0...10 V
2	4...20 mA
3	1..5 V
4	0..5 V
5	0.5...4.5 V ratiometric (with 5V supply voltage)
6	I²C, digital (only with electrical interface A or F)

Electrical Connection

A	600mm cable
B	Miniature DIN EN 175301-803 C connector
C	Packard Metripack connector
D	Standard DIN EN 175301-803 A connector
F	M12x1 Round connector
K	Moulded cable (IP69K)

Pressure Range

Bar	0.6	1.0	1.6	2.5	4	6	10	16	25	40
Order Code	00060	00100	00160	00250	00400	00600	01000	01600	02500	04000
Bar	50	60	100	160	250	400	600	1000	1600	2000
Order Code	05000	06000	10000	16000	25000	40000	60000	100000	160000	200000

If you require a customized solution for your program contact our sales team.