TM4101

Temperature sensor with process connection

TM-025KFBR14- /US/

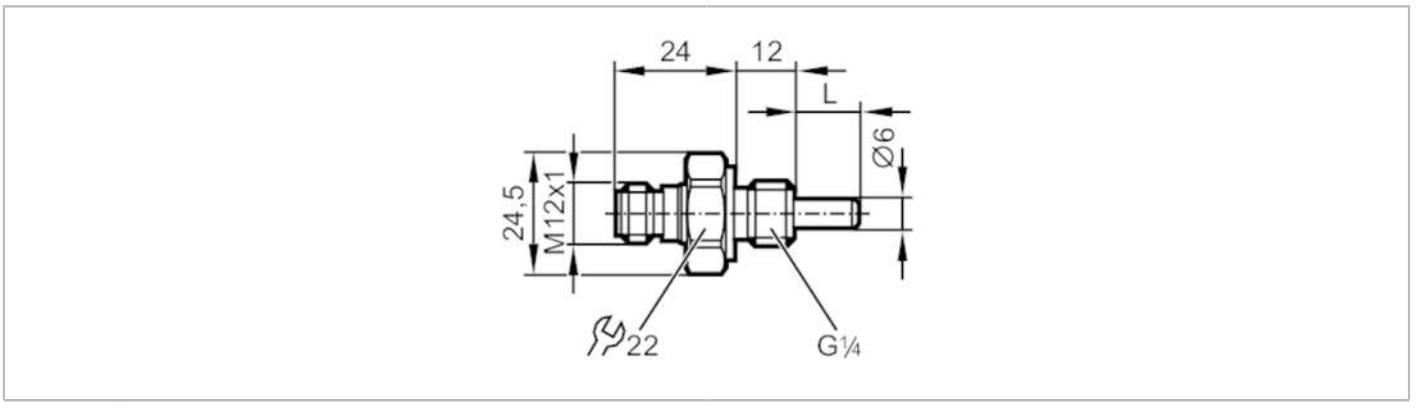

Product characteristics			
Measuring range		-40...150 °C	-40...302 °F
Process connection		threaded connection G 1/4	
Installation length EL	[mm]	25	
Application			
Special feature		Gold-plated contacts	
Measuring element		1 x Pt 100; (to DIN EN 60751, class A)	
Media		liquids and gases	
Pressure rating	[bar]	400	
Electrical data			
Protection class		III	
Measuring/setting range			
Probe length L	[mm]	12	
Measuring range		-40...150 °C	-40...302 °F
Accuracy / deviations			
Accuracy	[K]	± (0,15 K + 0,002 x|t|)	
Response times			
Dynamic response T05 / T09	[s]	1 / 3; (to DIN EN 60751)	
Operating conditions			
Ambient temperature	[°C]	-25...80	
Storage temperature	[°C]	-40...100	
Protection		IP 68; IP 69K	
Tests / approvals			
Shock resistance		DIN EN 60068-2-27	50 g (11 ms)
Vibration resistance		DIN EN 60068-2-6	20 g (10...2000 Hz)
MTTF	[years]	22831.05	
Mechanical data			
Weight	[g]	61	
Materials		stainless steel (1.4404 / 316L)	
Materials (wetted parts)		stainless steel (1.4404 / 316L); FKM	
Tightening torque	[Nm]	35	

TM4101

Temperature sensor with process connection

TM-025KFBR14- /US/

Process connection		threaded connection G 1/4
Probe diameter	[mm]	6
Installation length EL	[mm]	25

Remarks

Remarks	operating voltage "supply class 2" according to cULus
	The values for accuracy apply to flowing water.
Pack quantity	1 pcs.

Electrical connection

Connector: 1 x M12; coding: A; Contacts: gold-plated



Connection

