ILT LINEAR SENSOR

- Robust design
- Long life due to inductive technology
- Excellent IP ratings
- Ideal for use in vehicles and machines in harsh environments



The ILT sensor is a durable, high accuracy linear position sensor specifically designed for use in applications where long life and cost are important. The ILT linear sensor is particularly suitable for OEM customers who require good performance in hard environments such as industrial and agricultural machinery or special vehicle construction. Performance, repeatability and stability are outstanding over a large temperature range. The ILT sensor is available with multiple steps of electrical travel ranging from 25 mm to 600 mm. The sensor is housed inside an aluminium body which offers good protection for this rugged sensor.

Dimensions

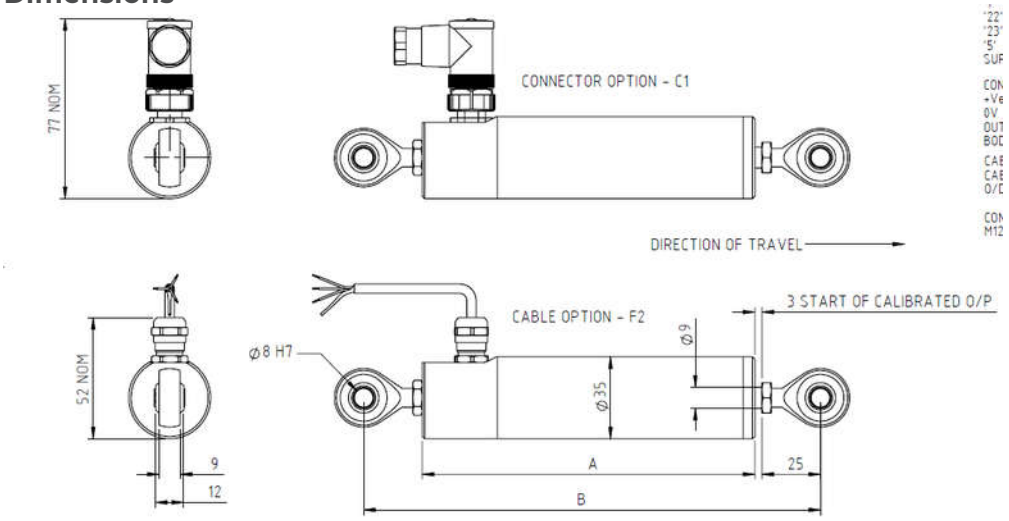

Dimensions in mm											
Stroke	25	50	75	100	150	200	250	300	400	500	600
A = Body Length	142	167	192	217	267	317	367	417	532	657	757
B = Min. Distance between Rod Ends	195	220	245	270	320	370	420	470	585	710	810

Body diameter	35 mm
Push rod extension	calibrated travel + 3 mm, OD 9.5 mm
Construction	Anodised Aluminium Body, plastic end caps, high durability 316 stainless steel or plastic rod ends at both ends
Typical Independent Linearity	≤ +/- 0.25% FSO @ 20° C
Temperature Coefficients	≤ +/- 0.01%/°C Gain & ≤ +/- 0.01%FS/°C Offset
Resolution	Infinite
Noise	< 0.02% FSO
Environmental Temperature Operating	-40°C to +125°C 5V ratiometric version (option 5) -40°C to +100°C other electronic versions -40°C to +85°C with connector
Sealing	Connector: IP67 Cable: IP67 / IP69K
EMC Performance	EN 61000-6-2, EN 61000-6-3
Vibration	IEC 68-2-6: 10 g
Shock	IEC 68-2-29: 40 g
MTBF	350,000 hrs 40°C Gf

Ordering information

(Please use the characters in the chart below to construct your product code)

ILT - AS - 25 - 22 - F2

Series	Installation options	Range	Output Signal	Electrical connection
ILT	AS= rod ends, steel AP = rod ends, plastic S= M8 female thread both sides	25 = 25 mm 50 = 50 mm 75 = 75 mm 100 = 100 mm 150 = 150 mm 200 = 200 mm extend till 600 in 50 mm steps 600 = 600 mm	1 = 0.5 - 4.5 V DC 22 = 4...20 mA (2 wire) 23 = 4...20 mA (3 wire) 5 = 0.5 - 4.5 V (ratiometric) power supply + Temp. rating see table below	C1 = M12 connector with mating connector F2 = 2 m screened cable, radial

Output options and connections

Output options				
Output Option	Output Description	Supply Voltage	Load Resistance	Temperature Rating
1	0.5 - 4.5 V DC	+24V nom. (9-28V)	≥ 5kΩ	-40...100°C
22	4...20 mA (2 wire)	+24V DC nom. (18-28V)	≈ 0 - 300Ω max. @24V ~ 1.2 to 6V across 300Ω {R_L max. = (V_s - 18) / 20[3]}	-40...100°C
23	4...20 mA (3 wire)	+24V nom. (13-28V)	≈ 0 - 300Ω max. ~ 1.2 to 6V across 300Ω	-40...100°C
5	0.5-4.5 V (ratiometric)	+5V (4.5-5.5V)	≥ 5kΩ	-40...125°C

Electrical options	
Connection Option	Description
F2 - Cable Option	Cable, 0.2 mm², O/A Screen, PUR jacket, O/D, 3-core Ø4mm, Length 2m
C1 - Connector option	M12, IP67 4 PIN connector with mating connector

Electrical wiring		
Connections	Cable 3-core	Connector
+Ve	Red	1
0 V	Black	3
Output (Options 1,23,5)	White	2
Body	Screen	4

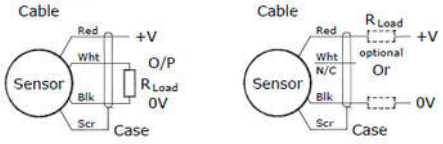

Incorrect Connection Protection levels:

5 Not protected - the sensor is not protected against either reverse polarity or over-voltage. The risk of damage should be minimal where the supply current is limited to less than 50mA.

1 Supply leads diode protected. Reverse voltage protection for 0-12V range.

22, 23 Protected against any misconnection within the rated voltage.