rotronic

Datenblatt - Fiche technique - Data sheet

11.01.3518



ROLINE RS232 Kabel ST-ST

ROLINE Câble RS-232 M/M

ROLINE RS232 Cable, M – M

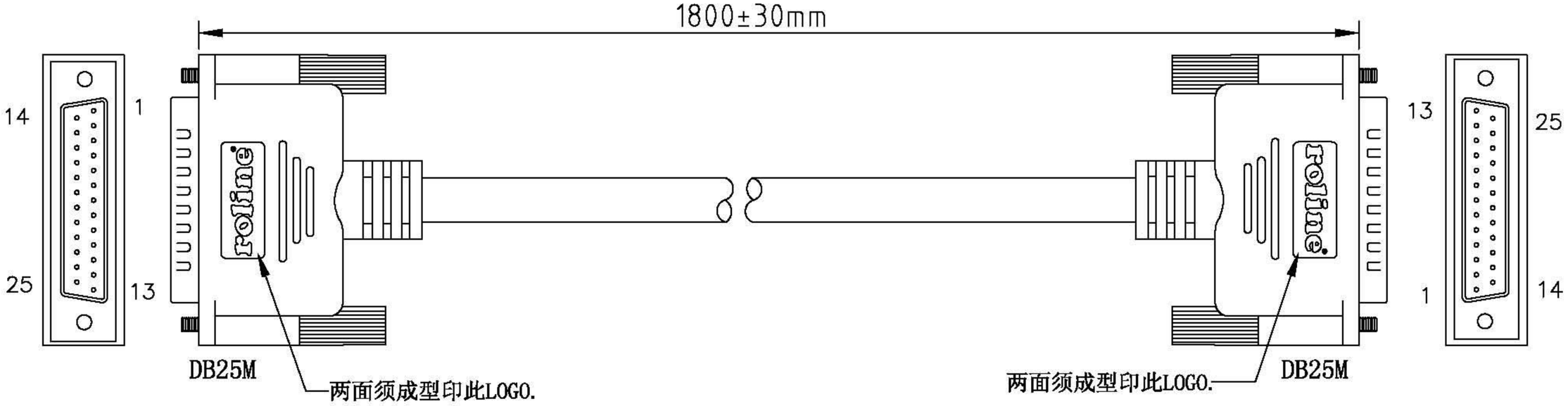

NOTE: 注:线材用RLA专用米色!! 包装方式:1PCS PE BAG+吊卡+条码贴纸包装

1. CABLE: 28AWG,NON-UL,AL-FOIL,25C+1,(RLA)BEIGE COLOR,OD=7.0mm,PVC JACKET.
2. LENGTH: 1800mm
3. CONNECTORS: DB25M*2PCS.(黑膠芯)
4. MOLD: 成型APPLE模 —— 成型APPLE模
5. SCREW: 4*40 INCH SCREW*4PCS.
6. COTACTS:

DB25M	1	2	3	4	.....	24	25	64
DB25F	1	2	3	4	.....	24	25	64

7. OPEN/SHORT TEXT 100% TEXT.
   INSULATION: MIN. 2M.
8. ALL MUST BE ROHS COMPLIANT.

料号	颜色	长度
11.01.3518	RLA米色	1800±30mm
11.01.3530	RLA米色	3000±30mm
11.01.3545	RLA米色	4500±30mm

COMPANY	RLA		ITEM NO.	11.01.3518	編號	B3924		
REVISION	DATE	DISCRIPTION	DRAWN BY			Rotronic Co., Ltd.	SCALE	
REV.A/0	2006.05.19	C9-2605009	DESIGNED BY				UNIT(mm)	
			APPROVAL BY				DRAWING NO.	