

Optimize design and performance of pneumatic systems.

AVENTICS™ Series 651, 652, 653

High flow rates and broad range of Air Preparation systems enable easier selection, design and system optimization.

EMERSON

Table of Contents

Series 651/652/653

Product Overview	2
Particulate Filter	4
Coalescing Filter	8
Adsorber - Activated Carbon	8
Regulator	12
Manifold Regulator	16
Particulate Filter/Regulator	19
Coalescing Filter/Regulator	23
Lubricator	27
Shut Off Isolation Valve	30
Slow Start/Quick Exhaust Valve	33
Redundant Safety Exhaust Valve	36
Diverter Block	39
Lockout Valve	41
Air Preparation Manifold Assemblies	43
Mounting Brackets	45
Bowl and Drain Options	46
Series 280 Digital Pressure Switch	47
Series PS182 Pressure Switch	48
Series PS180 Pressure Switch	49
Digital Pressure Gauge	49
Series 349 Pressure Switch	50
Electronic Liquid Level Indicator	51
Kits and Service Parts	52

Series 651/652/653 - Product Overview

Air Preparation Manifold Assembly & Optional Features

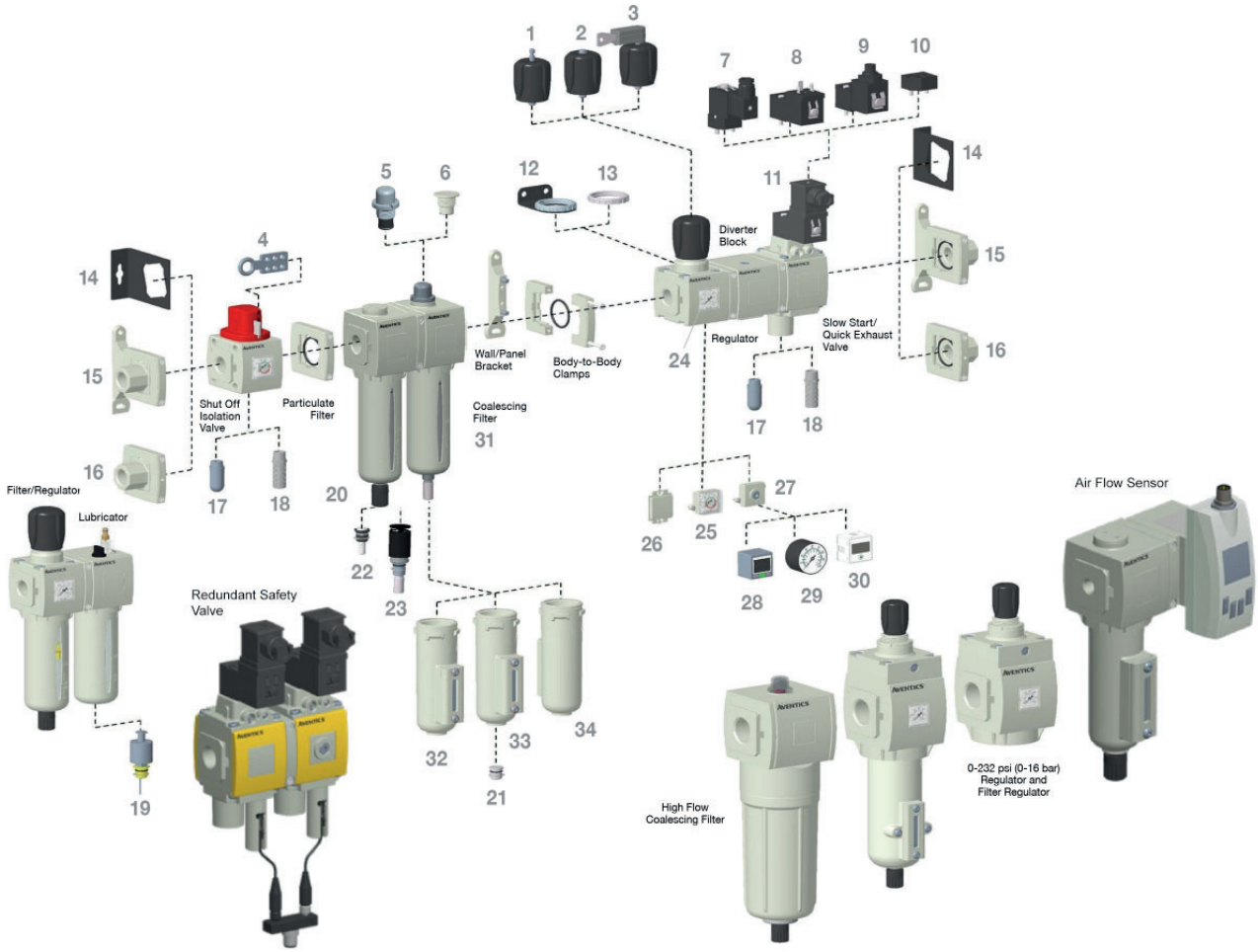

1) Provision for Key Lockable (Regulator & F/R*)
2) Tamper Resistant (Regulator & F/R*)
3) Key Lockable (Regulator & F/R*)
4) Scissor Lock
5) Differential Pressure Visual Pop-up Indicator (Coalescing Filter)
6) No Differential Pressure Indicator
7) Vertical Solenoid (DIN Connector with & w/o LED)
8) Horizontal Solenoid without DIN Spade Coil without Connector
9) Horizontal Solenoid with 3 Pin M12 Connection
10) Pilot Air Operated
11) Horizontal Solenoid (DIN Connector with & w/o LED)
12) Panel Nut/Panel Bracket (Regulator& F/R*)
13) Panel Nut (Regulator& F/R)
14) Side Mounting Brackets
15) End Plates,Body-to-BodyClamps & Wall/Panel Brackets
16) End Plates & Body-to-BodyClamps
17) PolyethyleneMuffler
18) Metal Muffler
19) Electronic Liquid Level Indicator
20) Semi-automatic/Manual Drain
21) Plug for No Drain
22) Manual Drain - Stainless Steel
23) Automatic Drain - Normally Open - Brass
24) Low Profile Gauge
25) Low Profile Gauge with Pressure Range Indicators
26) No Gauge Port
27) Port Plate
28) Digital Pressure Switch - DPS Series 280
29) Round Gauge
30) Digital Gauge
31) Polycarbonate Bowl & Guard (No Bowl Guard Option - Series 651 Only)
32) Metal Bowl with Polyamide Sight Gauge
33) Metal Bowl with Borosilicate (Glass) Sight Gauge
34) Metal Bowl without Sight Gauge

* F/R = Filter/Regulator

Series 651/652/653 Modular Assembly Mounting Features

(see Accessories pages 52 & 53 for part numbers)

Body-to-Body Assembly Clamp

Easy to assemble Body-to-Body clamp, with captive screws. Available with NBR or FKM Seal. Products are easily assembled in seconds.



Wall/Panel Bracket

The Wall/Panel Bracket feature is the primary mounting feature for the air prep assemblies. These brackets easily attach to the back of the Body-to-Body assembly clamps using two screws. In addition, this bracket can be used as a support bracket in between any station on the manifold.



End Plates with Body-to-Body Assembly Clamp

The "End Plate" feature allows the user to easily remove the air prep assembly without having to remove the piping. Simply loosen the screws on the Body-to-Body assembly clamps, and the manifold is easily removed in seconds. The kit includes Inlet/Outlet plates, Body-to-Body clamps and O-Rings.

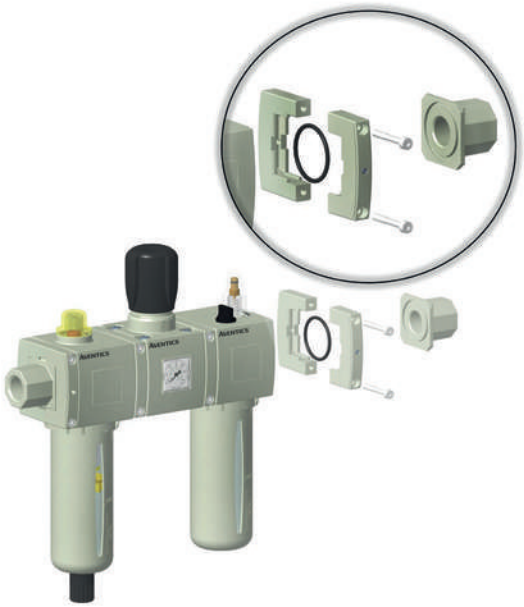

Side Mounting Brackets

The "Side Mounting Brackets" are typically used to mount single units, but could also be used to mount multiple units. Recommended only for static applications (without vibration).

NOTE: All ports are threaded as standard (except Lockout Valve).



PARTICULATE FILTER



- Large selection of filtering capacities to remove particulate and water droplets from compressed air or inert gas
- Sintered polyethylene elements, with centrifugal separator, include 5, 25 and 40 Microns
- Optional extended temperature range of -40 °F to 176 °F (-40 °C to 80 °C)
- Innovative two position plastic drain with manual and semi-automatic functions. Additional drains include an automatic style (brass) and manual (stainless steel)
- Polycarbonate and Aluminum bowls with a selection of sight gauge materials that meet industry and application requirements
- Threaded ports allow for individual or modular mounting
- Air purity class according to ISO 8573-1: 2010

Performance Data					
Series			**651**	**652**	**653**
Port Sizes			1/8, 1/4	1/4, 3/8, 1/2	1/2, 3/4, 1
Thread Type			NPTF, G & Rc		
Nominal Flow - Per ISO 6358 P1 = 91.4 PSI (6.3 bar) ΔP = 14.5 PSI (1 bar)		Micron Rating	SCFM (L/min ANR)		
	1/8	5µ	31.2 (885)	-	-
		25µ	32.5 (920)	-	-
		40µ	34.6 (980)	-	-
	1/4	5µ	44.1 (1250)	70.8 (2020)	-
		25µ	49.6 (1410)	89.3 (2250)	-
		40µ	54.7 (1550)	92.4 (2640)	-
	3/8	5µ	-	76.5 (2190)	-
		25µ	-	118.7 (3390)	-
		40µ	-	135.5 (3870)	-
	1/2	5µ	-	80.2 (2290)	136.0 (3850)
		25µ	-	129.5 (3700)	162.4 (4600)
		40µ	-	153.0 (4370)	196.0 (5550)
	3/4	5µ	-	-	141.3 (4000)
		25µ	-	-	166.0 (4700)
		40µ	-	-	229.5 (6500)
	1	5µ	-	-	150.1 (4250)
		25µ	-	-	176.6 (5000)
		40µ	-	-	245.4 (6950)
Maximum Inlet Pressure PSIG (bar)		Polycarbonate Bowl	232 (16)		174 (12)
		Aluminum Bowl	232 (16)		290 (20)
Ambient Temperature Range °F (°C)			-4 to 122 (-20 to 50)		
Fluid Temperature Range °F (°C)			-4 to 122 (-20 to 50)		
Fluid			Air or Inert Gas		
Weight lbs. (kg)		w/Polycarbonate Bowl	0.52 (0.238)	0.94 (0.426)	2.06 (0.934)
		w/Aluminum Bowl	0.84 (0.382)	1.22 (0.553)	2.51 (1.140)

Materials in Contact with Fluid	
Body	Aluminum
Seals	NBR/FKM
Filter Element	Sintered Polyethylene
Bowl	Polycarbonate or Aluminum

Air Purity Class - ISO 8573-1:2010	
5µ	(5:8:4)
25µ	(6:8:4)
40µ	(7:8:4)

How to Order - Particulate Filter

8 651 A B B P 2 J A00 0 N

Port Type
8 = NPTF
G = ISO 228/1-G
J = ISO 7/1 Rc

[1] **Product Series**
651
652
653

Revision
A

Product Type
B = Filter - Particulate

Elements
A = 40 Micron (Green)
B = 5 Micron (White)
J = 25 Micron (Yellow)

A  B  J 

Bowl Type
K = Metal Bowl without Sight Gauge
L = Metal Bowl with Sight Gauge (Glass)
M = Metal Bowl with Sight Gauge (Polyamide)
N = Polycarbonate Bowl without Bowl Guard (651 only)
P = Polycarbonate Bowl with Bowl Guard

K/L/M  N  P 

Drain Type
0 = No Drain
A = Auto Drain Normally Open
N = Manual - Semi-automatic Drain
Q = Manual Drain - Stainless Steel
C = Auto Drain Normally Closed
J = External Pulse Drain

A  N  Q  C  J 

[2] **Options**
A00 = No Options
101 = Side Mounting Brackets
105 = High Temperature (80 °C/176 °F)
[3] 106 = Low Temperature (-40 °C/-40 °F)
109 = FKM Seals
117 = ATEX Zones 1–21
202 = 105 + 109
2A9 = 105 + 106

101 

Port Size
1 = 1/8 (Series 651)
2 = 1/4 (Series 651 or 652)
3 = 3/8 (Series 652)
4 = 1/2 (Series 652 or 653)
5 = 3/4 (Series 653)
6 = 1 (Series 653)

1 Conforms to ISO standards 1179-1

2 If multiple options are required, please use the online CAD configurator on the website to generate the part number (www.emerson.com), or consult factory

3 Compressed air must be dry enough so no ice formation is present on the product. All bowls should be emptied prior to ambient temperatures dropping below 32 °F (0 °C)

Dimensions: mm (inches) Series 651/652/653 Particulate Filter

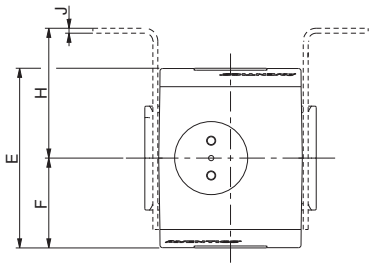

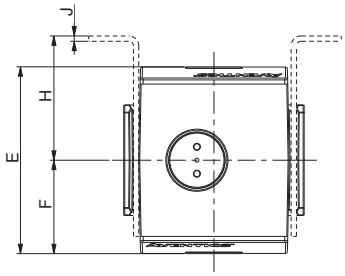

Series 651/652

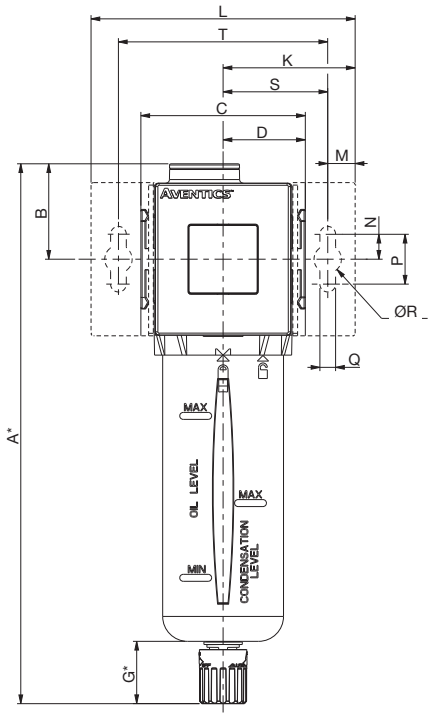

Series 653

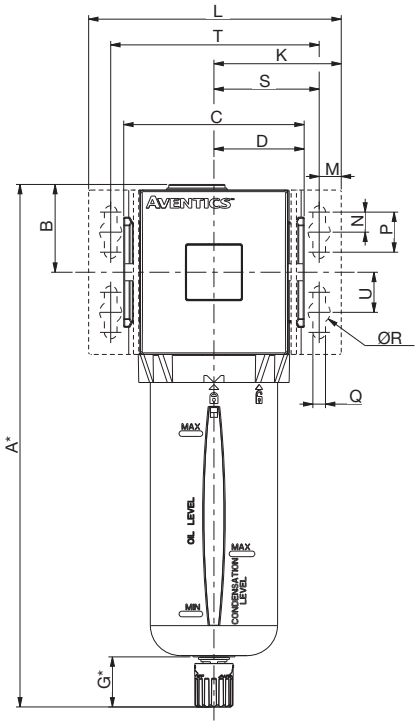

Cross Section - Series 651/652/653 Particulate Filter

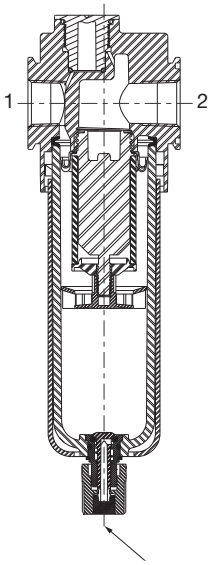

To remove bowl allow:
651 - 44mm (1.8in)
652 - 75mm (3.0in)
653 - 100mm (4.0in)
from the bottom of the bowl drain

	A*	B	C	D	E	F	G*	H	J
651	197	33.8	50	25	58	29	25	44.5	1.27
	(7.76)	(1.33)	(1.97)	(0.98)	(2.28)	(1.14)	(0.98)	(1.75)	(0.05)
652	217	38.3	66	33	69	34.5	25	50	1.9
	(8.54)	(1.51)	(2.60)	(1.30)	(2.72)	(1.36)	(0.98)	(1.97)	(0.07)
653	260.7	43.8	90	45	93.2	46.6	25	62	3
	(10.26)	(1.72)	(3.54)	(1.77)	(3.67)	(1.83)	(0.98)	(2.44)	(0.11)

	K	L	M	N	P	Q	ØR	S	T	U
651	46	92	11	10	20	6.3	11	35	70	-
	(1.81)	(3.62)	(0.43)	(0.39)	(0.79)	(0.25)	(0.43)	(1.38)	(2.76)	-
652	53	106	11	10	20	6.3	11	42	84	-
	(2.09)	(4.17)	(0.43)	(0.39)	(0.79)	(0.25)	(0.43)	(1.65)	(3.31)	-
653	62.5	125	11	10	20	6.3	11	51.5	103	20
	(2.46)	(4.92)	(0.43)	(0.39)	(0.79)	(0.25)	(0.43)	(2.03)	(4.06)	(0.79)

* Variable dimension based on type of drain that is specified; if an Automatic Drain is specified, add another 5mm to G dimension, which also adds 5mm to the A dimension.

Particulate Filter Flow Charts

651 Filter | 5µ Filtration | 1/8 Ports

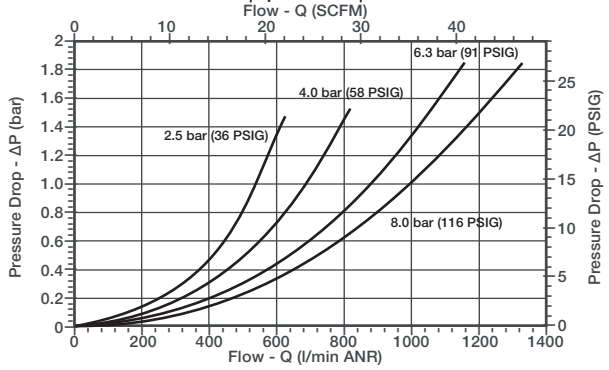

651 Filter | 5µ Filtration | 1/4 Ports

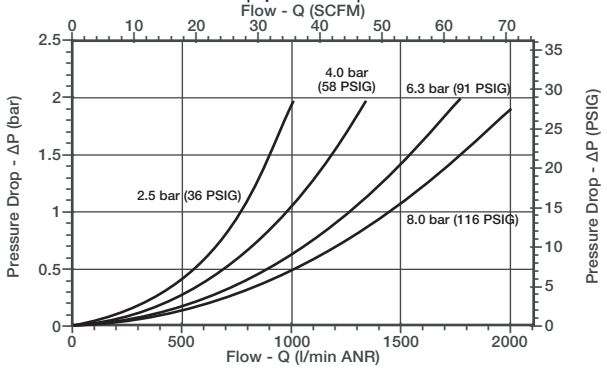

652 Filter | 5µ Filtration | 1/4 Ports

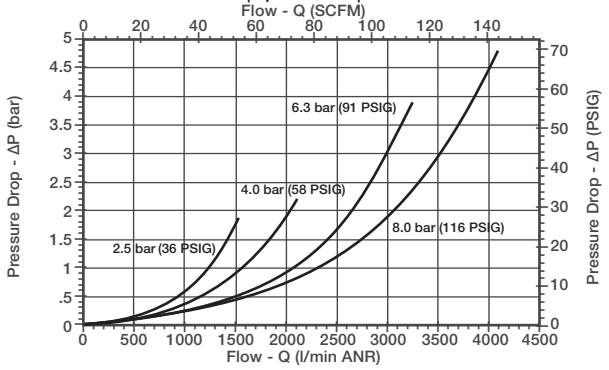

652 Filter | 5µ Filtration | 3/8 Ports

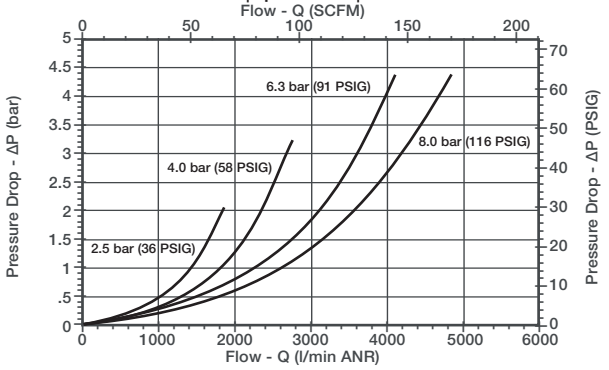

652 Filter | 5µ Filtration | 1/2 Ports

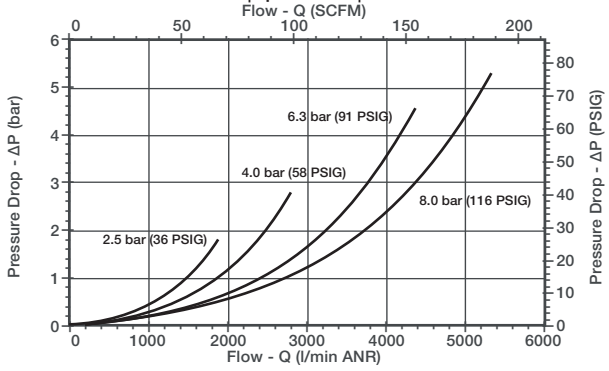

653 Filter | 5µ Filtration | 1/2 Ports

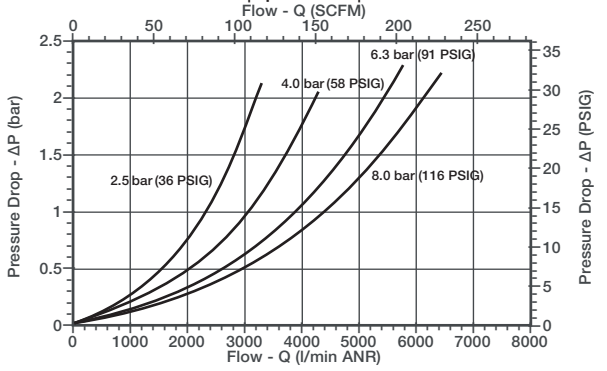

653 Filter | 5µ Filtration | 3/4 Ports

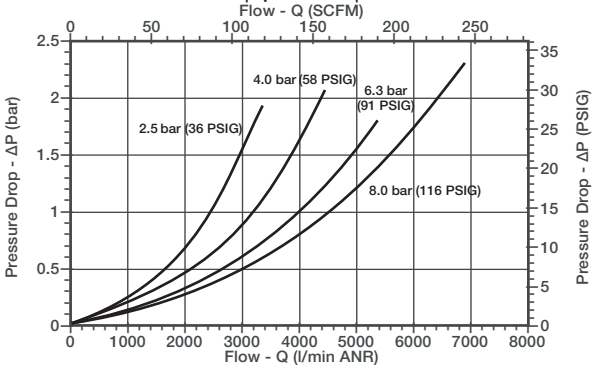

653 Filter | 5µ Filtration | 1 Ports

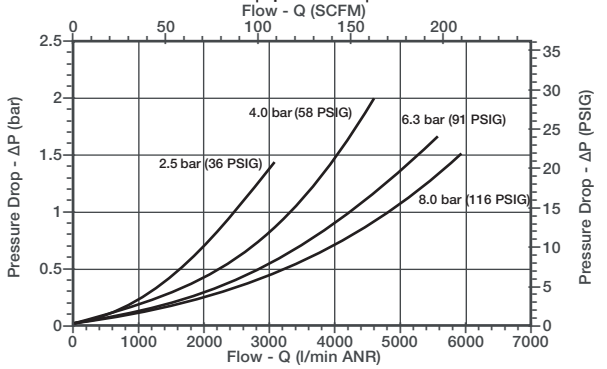

COALESCING FILTER & ADSORBER

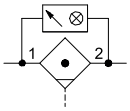

- Extensive range of coalescing filter elements to remove oil and sub-micron particles down to 0.01 microns. Air purity class according to ISO 8573-1: 2010
- Optional 3 micron pre-filter integrated in the coalescing element eliminates the need for a separate particulate element. Coalescing filter elements include 0.3 and 0.01 microns
- Adsorber filter (activated carbon) for removal of odors and hydrocarbon vapor
- 653 High Flow Coalescer optimizes overall 653 manifold flow; use transition adapters to step up from 651 to 652 or 652 to 653 filters when needed
- Polycarbonate and Aluminum bowls with a selection of sight gauge materials that meet industry and application requirements
- Optional extended temperature range of 176 °F (80 °C)
- Visual or electrical differential pressure Indicators for condition monitoring of filter element



651/652/653 653 High Flow

Performance Data						
Series			**651**	**652**	**653**	**653 High Flow**
Port Sizes			1/8, 1/4	1/4, 3/8, 1/2	1/2, 3/4, 1	1
Thread Type			NPTF, G & Rc			
Nominal Flow - Per ISO 6358 P1 = 91.4 PSI (6.3 bar) ΔP = 5 PSI (0.35 bar)		Micron Rating	SCFM (L/min ANR)			
	1/8	0.3 µm	15.3 (430)	-	-	-
		0.01 µm	10.9 (310)	-	-	-
	1/4	0.3 µm	17.0 (480)	28.0 (800)	-	-
		0.01 µm	12.4 (350)	25.0 (710)	-	-
	3/8	0.3 µm	-	28.6 (820)	-	-
		0.01 µm	-	27.5 (790)	-	-
	1/2	0.3 µm	-	30.5 (870)	81.2 (2300)	-
		0.01 µm	-	29.1 (830)	63.6 (1800)	-
	3/4	0.3 µm	-	-	90.0 (2550)	-
		0.01 µm	-	-	67.1 (1900)	-
	1	0.3 µm	-	-	91.8 (2600)	291.3 (8250)
		0.01 µm	-	-	79.5 (2250)	271.9 (7700)
Maximum Inlet Pressure PSIG (bar)		Polycarbonate Bowl	232 (16)		174 (12)	-
		Aluminum Bowl	232 (16)		290 (20)	
Ambient Temperature Range °F (°C)			35 to 122 (1.7 to 50)			
Fluid Temperature Range °F (°C)			35 to 122 (1.7 to 50)			
Fluid			Air or Inert Gas			
Weight lbs. (kg)		w/Polycarbonate Bowl	0.54 (0.245)	0.98 (0.442)	3.18 (1.442)	N/A
		w/Aluminum Bowl	0.86 (0.390)	1.25 (0.569)	2.72 (1.234)	4.03 (1.828)

Materials in Contact with Fluid	
Body	Aluminum
Seals	NBR/FKM
Coalescing Filter Element	Borosilicate Microfiber & Polyester
Filter Element End Cap	Polypropylene
Adsorber	Activated Carbon
Bowl	Polycarbonate or Aluminum

Air Purity Class - ISO 8573-1:2010*	
0.3 µm	(3:7:3)
0.01 µm	(2:7:2)

* Series 651 maximum flow at 91.4 PSI (6.3 bar) inlet pressure to maintain air purity class is 3.5 SCFM (100 L/min)

* Series 652 maximum flow at 91.4 PSI (6.3 bar) inlet pressure to maintain air purity class is 10.6 SCFM (303 L/min)

* Series 653 maximum flow at 91.4 PSI (6.3 bar) inlet pressure to maintain air purity class is 25.0 SCFM (707 L/min)

* Series 653 - High Flow maximum flow at 91.4 PSI (6.3 bar) inlet pressure to maintain air purity class is 58.0 SCFM (1,641 L/min)

How to Order - Coalescing Filter

8 651 A F D P 2 H A00 0 N

Port Type
8 = NPTF
[1] G = ISO 228/1-G
J = ISO 7/1 Rc

Product Series
651
652
653

Revision
A

Product Type
A = Adsorber - Activated Carbon (All Series)
F = Filter - Coalescing (All Series)
[2] H = High Flow Version (Series 653 Filter only, Coalescing or Adsorber)

A/F H



Elements
D = 0.3 Micron - Coalescer (Green)
E = 0.01 Micron - Coalescer (Red)
F = Adsorber - Activated Carbon (Gray)
M = 0.3 Micron Coalescer with 3 Micron Prefilter (Green)
N = 0.01 Micron Coalescer with 3 Micron Prefilter (Red)

D/M E/N F



Bowl Type
K = Metal Bowl without Sight Gauge
L = Metal Bowl with Sight Gauge (Glass)
M = Metal Bowl with Sight Gauge (Polyamide)
N = Polycarbonate Bowl without Bowl Guard (651 only)
P = Polycarbonate Bowl with Bowl Guard

K (High Flow) K/L/M N P

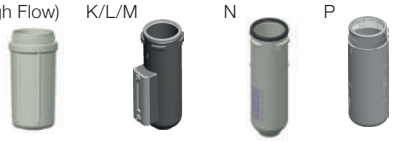

Drain Type
0 = No Drain
A = Auto Drain Normally Open
N = Manual - Semi-automatic Drain
Q = Manual Drain - Stainless Steel
C = Auto Drain Normally Closed
J = External Pulse Drain

A N Q C J



[3] **Options**
A00 = No Options
101 = Side Mounting Brackets
105 = High Temperature (80 °C/176 °F)
109 = FKM Seals
117 = ATEX Zones 1–21
202 = 105 + 109

101



Indication Type
H = Differential Pressure Visual Pop-up Indicator
J = No Differential Pressure Indicator

H



Port Size
1 = 1/8 (Series 651)
2 = 1/4 (Series 651 or 652)
3 = 3/8 (Series 652)
4 = 1/2 (Series 652 or 653)
5 = 3/4 (Series 653)
6 = 1 (Series 653)

1 Conforms to ISO standards 1179-1
2 Only available in 1" Port Size and with Metal Bowl without Sight Gauge
3 If multiple options are required, please use the online CAD configurator on the website to generate the part number (www.emerson.com), or consult factory

Dimensions: mm (inches) Series 651/652/653 Coalescing Filter and Adsorber

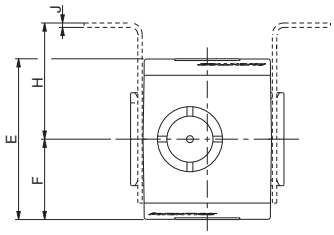

Series 651/652

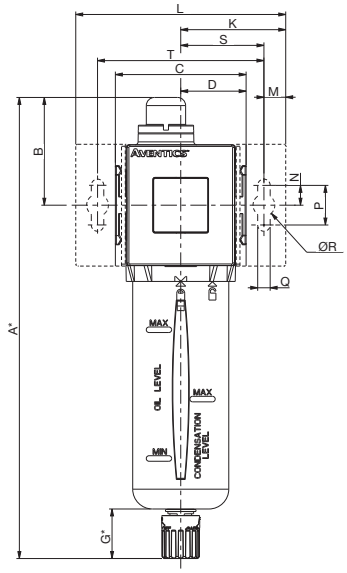

Series 653

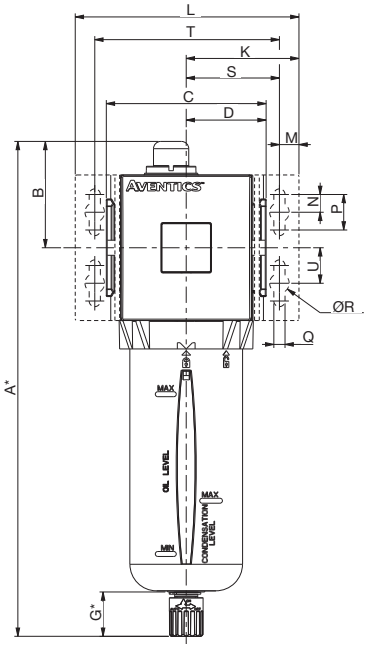

Series 653 High Flow

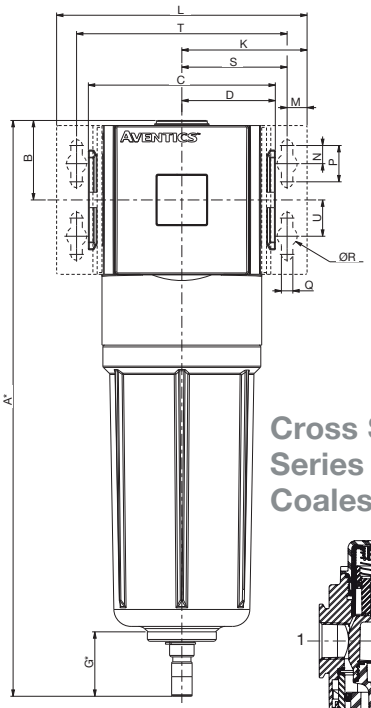

Cross Section - Series 651/652/653 Coalescing Filter

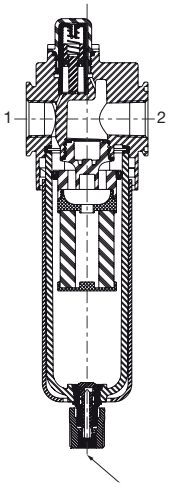

To remove bowl allow:
651 - 60mm (2.4in)
652 - 80mm (3.2in)
653 - 105mm (4.2in)
653 High Flow - 125mm (4.9in)
from the bottom of
the bowl drain

	A*	B	C	D	E	F	G*	H	J
651	213	50	50	25	58	29	25	44.5	1.27
	(8.39)	(1.97)	(1.97)	(0.98)	(2.28)	(1.14)	(0.98)	(1.75)	(0.05)
652	233	54.4	66	33	69	34.5	25	50	1.9
	(9.17)	(2.14)	(2.60)	(1.30)	(2.72)	(1.36)	(0.98)	(1.97)	(0.07)
653	276.8	59.9	90	45	93.2	46.6	25	62	3
	(10.90)	(2.36)	(3.54)	(1.77)	(3.67)	(1.83)	(0.98)	(2.44)	(0.12)
653 High Flow	317.3	43.8	103	51.5	93.2	46.6	35.5	62	3
	(12.49)	(1.72)	(4.06)	(2.03)	(3.67)	(1.83)	(1.40)	(2.44)	(0.12)

	K	L	M	N	P	Q	ØR	S	T	U
651	46	92	11	10	20	6.3	11	35	70	-
	(1.81)	(3.62)	(0.43)	(0.39)	(0.79)	(0.25)	(0.43)	(1.38)	(2.76)	-
652	53	106	11	10	20	6.3	11	42	84	-
	(2.09)	(4.17)	(0.43)	(0.39)	(0.79)	(0.25)	(0.43)	(1.65)	(3.31)	-
653	62.5	125	11	10	20	6.3	11	51.5	103	20
	(2.46)	(4.92)	(0.43)	(0.39)	(0.79)	(0.25)	(0.43)	(2.03)	(4.06)	(0.79)
653 High Flow	69	138	11	10	20	6.3	11	58	116	20
	(2.72)	(5.43)	(0.43)	(0.39)	(0.79)	(0.25)	(0.43)	(2.28)	(4.57)	(0.79)

* Variable dimension based on type of drain that is specified; if an Automatic Drain is specified, add another 5mm to G dimension, which also adds 5mm to the A dimension.

Coalescing Filter and Adsorber Flow Charts

651 Filter | 0.3µ Filtration | 1/8 Ports

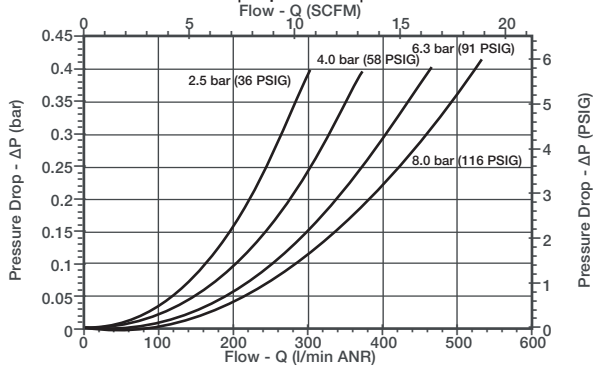

651 Filter | 0.3µ Filtration | 1/4 Ports

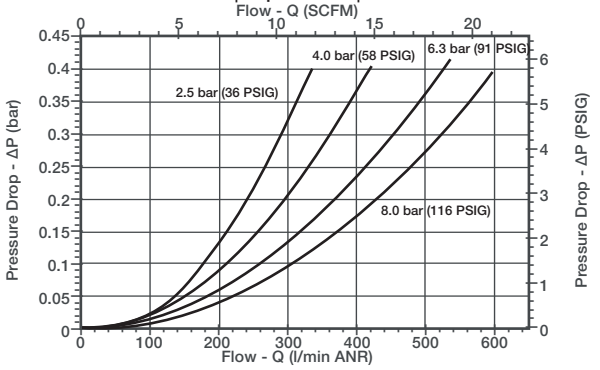

652 Coalescing Filter | 0.3µ Filtration | 1/4 Ports

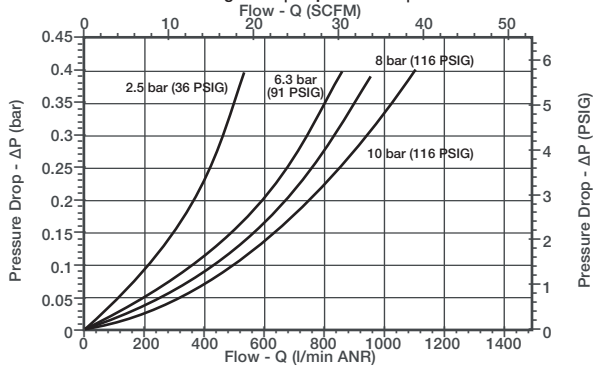

652 Coalescing Filter | 0.3µ Filtration | 3/8 Ports

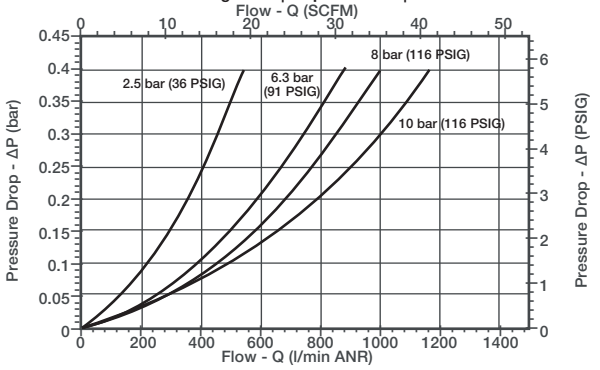

652 Coalescing Filter | 0.3µ Filtration | 1/2 Ports

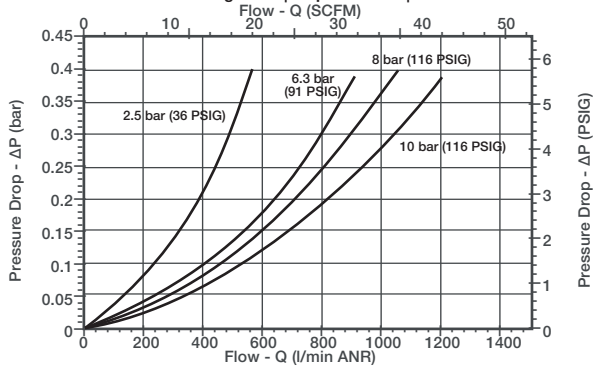

653 Coalescing Filter | 0.3µ Filtration | 1/2 Ports

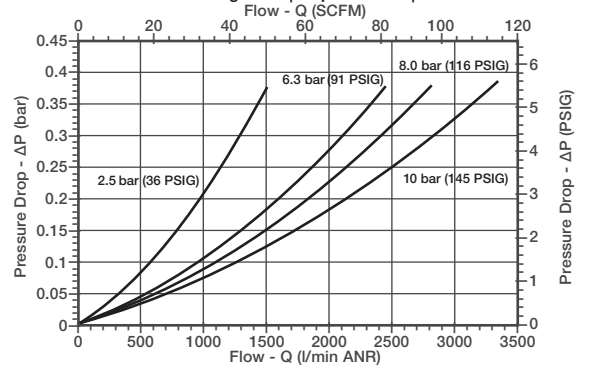

653 Coalescing Filter | 0.3µ Filtration | 3/4 & 1 Ports

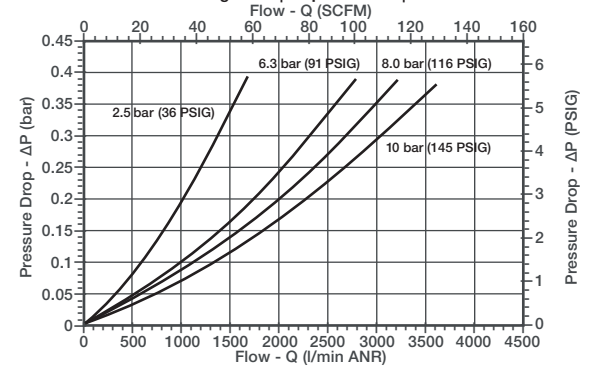

653 High Flow Coalescing Filter | 0.3µ Filtration | 1 Ports

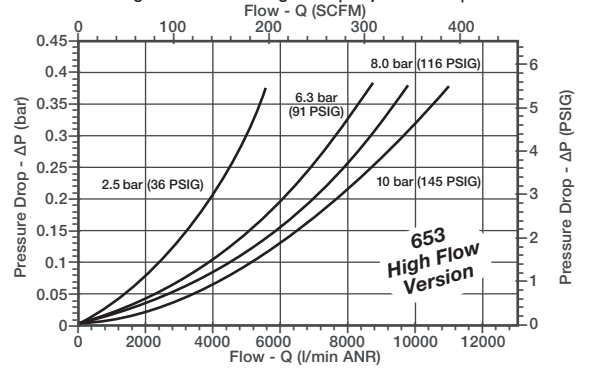

REGULATOR

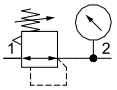



- High flow with a wide range of adjustable output pressure ranges
- Available with relieving, non-relieving and internal flow check options
- Optional low profile gauge, round gauge, digital gauge or digital pressure switch
- Optional extended temperature range of -40 °F to 176 °F (-40 °C to 80 °C)
- Threaded ports allow for individual or modular mounting
- Key lockable and tamper resistant options

Performance Data				
Series		**651**	**652**	**653**
Port Size		1/8, 1/4	1/4, 3/8, 1/2	1/2, 3/4, 1
Thread Type		NPTF, G & Rc		
Nominal Flow - Per ISO 6358 P1 = 145 PSI (10 bar) Setpoint P2 = 91.4 PSI (6.3 bar) ΔP = 14.5 PSI (1 bar)		SCFM (L/min ANR)		
	1/8	28.1 (800)	-	-
	1/4	72.6 (2060)	144.2 (4120)	-
	3/8	-	228.6 (6530)	-
	1/2	-	245.0 (7000)	245.0 (7000)
	3/4	-	-	353.1 (10000)
	1	-	-	406.1 (11500)
Maximum Inlet Pressure PSIG (bar) P1		232 (16)		290 (20)
Adjustable Pressure Ranges PSIG (bar) P2		3 to 45 (0.2 to 3)		
		3 to 60 (0.2 to 4)		
		7 to 125 (0.5 to 8)		
		7 to 145 (0.5 to 10)		
		-	-	7 to 232 (0.5 to 16)*
Pilot Operated Regulator Input-to-Output Pressure Ratio		-	1:1	-
Ambient Temperature Range °F (°C)		-4 to 122 (-20 to 50)		
Fluid Temperature Range °F (°C)		-4 to 122 (-20 to 50)		
Fluid		Air or Inert Gas		
Weight lbs. (kg)		0.47 (0.215)	0.95 (0.431)	2.43 (1.102)/2.85 (1.293)*

* High pressure assisted version

Materials in Contact with Fluid	
Body	Aluminum
Seals	NBR/FKM
Springs	Stainless Steel
Poppet	Brass
Stem	PA

How to Order - Regulator

8 651 A R 0 0 2 F A00 G 0

Port Type
8 = NPTF
[1] G = ISO 228/1-G
J = ISO 7/1 Rc

Product Series
651
652
653

Revision
A

Product Type
K = Regulator with Internal Flow Check (652 only)
[2] R = Regulator
W = Pilot Operated Regulator (652 only)

K/R W




Port Size
1 = 1/8 (Series 651)
2 = 1/4 (Series 651 or 652)
3 = 3/8 (Series 652)
4 = 1/2 (Series 652 or 653)
5 = 3/4 (Series 653)
6 = 1 (Series 653)

Gauge Type
B = Digital Pressure Switch - PNP (Rated Pressure - 0-145 PSIG/0-10 bar)
C = Digital Pressure Switch - NPN (Rated Pressure - 0-145 PSIG/0-10 bar)
D = Digital Gauge (Rated Pressure - 0-145 PSIG/0-10 bar)
F = Low Profile Gauge PSI/bar
G = Low Profile Gauge bar/PSI
H = Low Profile Gauge PSI/bar with Pressure Range Indicator
J = Low Profile Gauge bar/PSI with Pressure Range Indicator
N = No Gauge with Port Plate (1/8 NPTF)
P = No Gauge with Port Plate (1/8 ISO 7/1 Rc)
Q = Round Gauge bar/PSI
R = Round Gauge PSI/bar
0 = No Gauge Port

B/C D F/G H/J




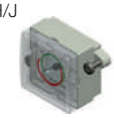

N/P Q/R 0





Pressure Range
D = 3–45 PSIG/0.2–3 bar
E = 3–60 PSIG/0.2–4 bar
G = 7–125 PSIG/0.5–8 bar
H = 7–145 PSIG/0.5–10 bar
N = 7–232 PSIG/0.5–16 bar (653 only)

[3] Options
A00 = No Options
101 = Side Mounting Brackets
102 = Panel Nut (651 and 652 only)
103 = Tamper Resistant
104 = Key Lockable
105 = High Temperature (80 °C/176 °F)
[4] 106 = Low Temperature (-40 °C/-40 °F)
109 = FKM Seals
113 = Stainless Steel Fasteners
114 = Provision for Key Lockable Option
117 = ATEX Zones 1–21
119 = Panel Bracket with Panel Nut (651 and 652 only)
121 = Non-relieving
122 = Bottom Oriented Pressure Adjustment
123 = Gauge Type Mounted for Right-to-Left Flow
202 = 105 + 109
2A9 = 105 + 106

101 103 104 119






122 123




1 Conforms to ISO standards 1179-1
2 Relieving Standard; use option 121 for Non-relieving
3 If multiple options are required, please use the online CAD configurator on the website to generate the part number (www.emerson.com), or consult factory
4 Compressed air must be dry enough so no ice formation is present on the product

Dimensions: mm (inches) Series 651/652/653 Regulator

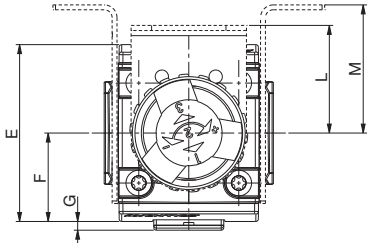

Series 651/652

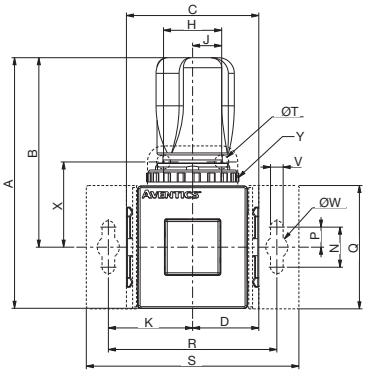

Series 653

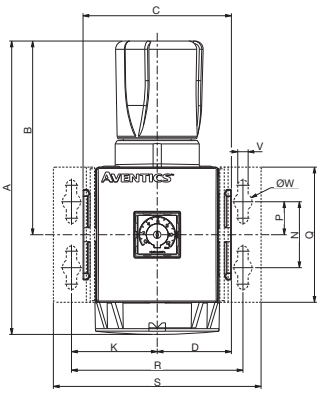

Series 653 High Pressure Regulator - 232 PSIG (16 bar)

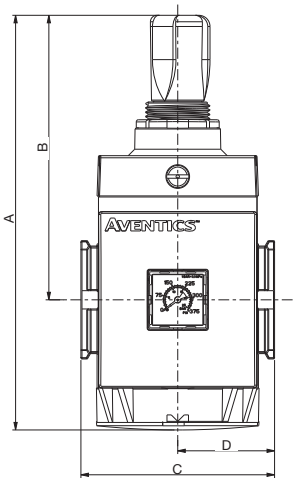

	A	B	C	D	E	F	G	H	J	K	L	M
651	103	77.5	50	25	58	29	3.4	29	14.5	35	42	44.5
	(4.06)	(3.05)	(1.97)	(0.98)	(2.28)	(1.14)	(0.13)	(1.14)	(0.57)	(1.38)	(1.65)	(1.75)
652	125	94.5	66	33	69	34.5	2.5	29	14.5	41.75	42	50
	(4.92)	(3.72)	(2.60)	(1.30)	(2.72)	(1.36)	(0.10)	(1.14)	(0.57)	(1.64)	(1.65)	(1.97)
653	178.4	117.5	90	45	93	46.5	3	-	-	52	-	62
	(7.02)	(4.63)	(3.54)	(1.77)	(3.66)	(1.83)	(0.12)	-	-	(2.05)	-	(2.44)

	N	P	Q	R	S	ØT	V	ØW	X	Y
651	20	10	50	70	92	7	6.3	11	39.1	M30 x 2
	(0.79)	(0.39)	(1.97)	(2.76)	(3.62)	(0.28)	(0.25)	(0.43)	(1.54)	
652	20	10	61.5	84	106	7	6.3	11	43.5	M37 x 2
	(0.79)	(0.39)	(2.42)	(3.31)	(4.17)	(0.28)	(0.25)	(0.43)	(1.71)	
653	40	20	82	104	126	-	6.3	11	-	-
	(1.57)	(0.79)	(3.23)	(4.09)	(4.96)	-	(0.25)	(0.43)	-	

	A	B	C	D	E	F	G
653 High Pressure	193	132	90	45	93	46.5	3
	(7.60)	(6.20)	(3.54)	(1.77)	(3.66)	(1.83)	(0.12)

Series 651/652/653

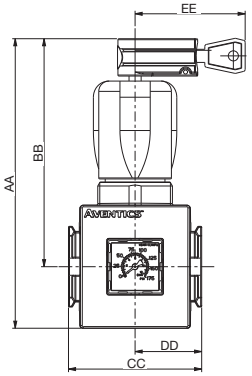

	AA	BB	CC	DD	EE
651	121.5	96	50	25	55
	(4.78)	(3.78)	(1.97)	(0.98)	(2.17)
652	151	120	66	33	55
	(5.94)	(4.72)	(2.60)	(1.30)	(2.17)
653	192	137	90	45	55
	(7.56)	(5.39)	(3.54)	(1.77)	(2.17)

Cross Section - Series 651/652/653 Regulator

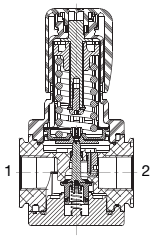

Regulator Flow Charts

651 Regulator | 1/8 Ports
P1 = 10 bar (145 PSIG)

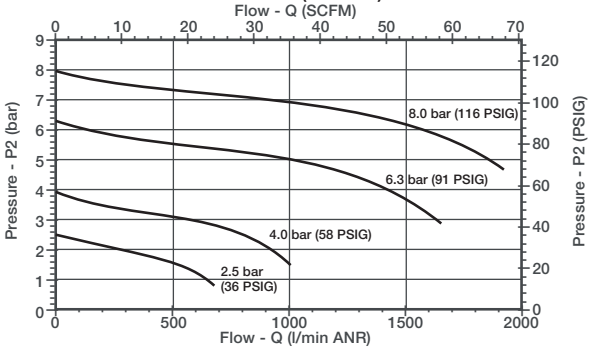

651 Regulator | 1/4 Ports
P1 = 10 bar (145 PSIG)

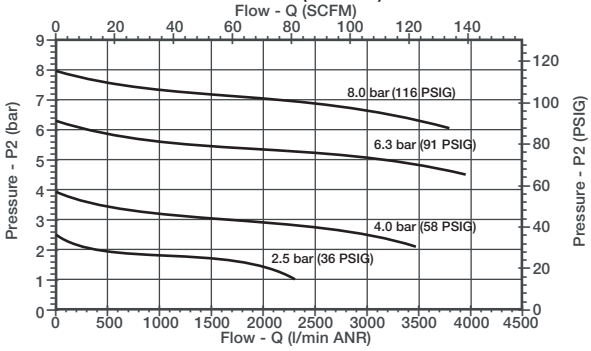

652 Regulator | 1/4 Ports
P1 = 10 bar (145 PSIG)

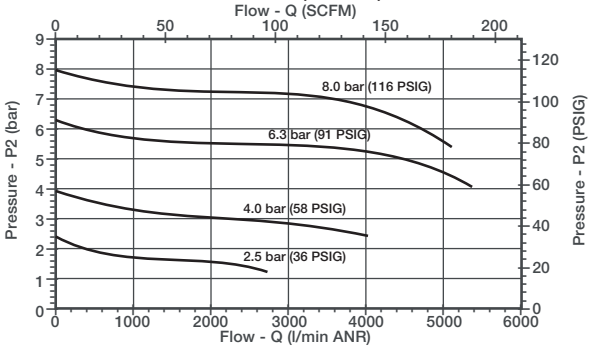

652 Regulator | 3/8 Ports
P1 = 10 bar (145 PSIG)

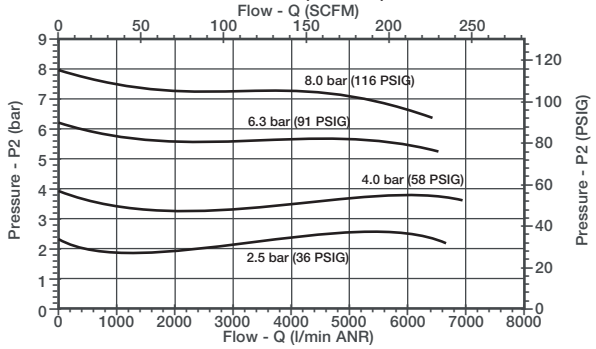

652 Regulator | 1/2 Ports
P1 = 10 bar (145 PSIG)

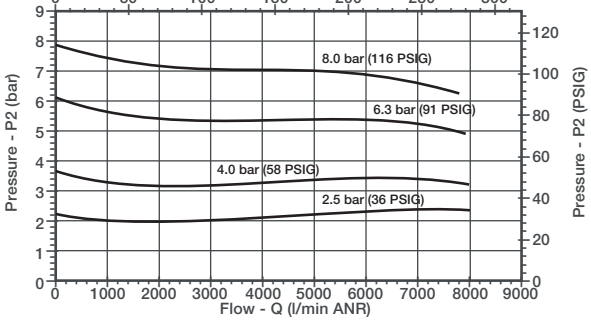

653 Regulator | 1/2 Ports
P1 = 10 bar (145 PSIG)

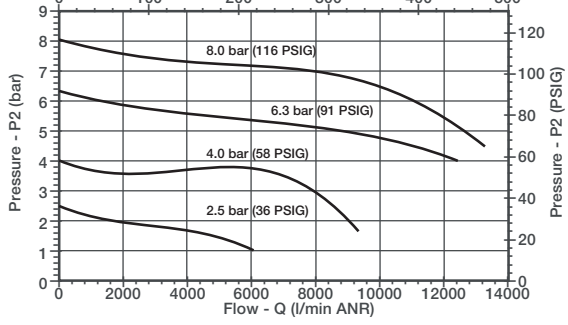

653 Regulator | 3/4 Ports
P1 = 10 bar (145 PSIG)

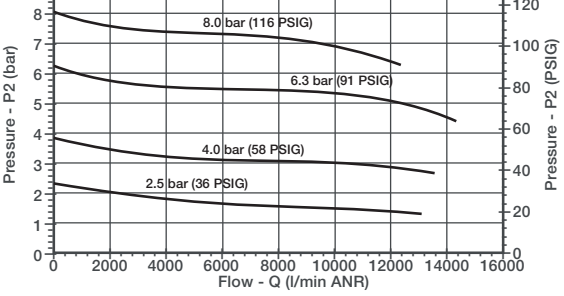

653 Regulator | 1 Ports
P1 = 10 bar (145 PSIG)

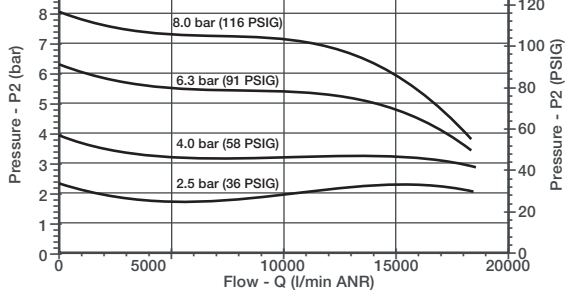

MANIFOLD REGULATOR

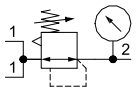



- High flow with a wide range of adjustable output pressure ranges
- Allows for a common inlet supply pressure within the regulator manifold, while maintaining several adjustable output pressures
- Optional low profile gauge, round gauge, digital gauge and digital pressure switch
- Optional extended temperature range of -40 °F to 176 °F (-40 °C to 80 °C)
- Key lockable and tamper proof options

Performance Data			
Series		**651**	**652**
Port Sizes	P1 (Inlet)	1/4	1/2
	P2 (Outlet)	1/8	3/8
Thread Type		NPTF, G & Rc	
Nominal Flow - Per ISO 6358 P1 = 145 PSI (10 bar) Setpoint P2 = 91.4 PSI (6.3 bar) ΔP = 14.5 PSI (1 bar)		SCFM (L/min ANR)	
		29.5 (840)	280.0 (8000)
Maximum Pressure PSIG (bar) P1		232 (16)	
Adjustable Pressure Ranges - PSI (bar) P2		3 to 45 (0.2 to 3)	
		3 to 60 (0.2 to 4)	
		7 to 125 (0.5 to 8)	
		7 to 145 (0.5 to 10)	
Ambient Temperature Range °F (°C)		-4 to 122 (-20 to 50)	
Fluid Temperature Range °F (°C)		-4 to 122 (-20 to 50)	
Fluid		Air or Inert Gas	
Weight lbs. (kg)		0.47 (0.215)	0.93 (0.422)

Materials in Contact with Fluid	
Body	Aluminum
Seals	NBR/FKM
Springs	Stainless Steel

How to Order - Manifold Regulator

8 651 A M 0 0 2 F A00 G 0

Port Type
8 = NPTF
[1] G = ISO 228/1-G
J = ISO 7/1 Rc

Product Series
651
652

Revision
A

Product Type
[2] M = Manifold Regulator

M


Port Size
2 = 1/4 In (1/8 Out) (Series 651)
4 = 1/2 In (3/8 Out) (Series 652)

Gauge Type
B = Digital Pressure Switch - PNP
C = Digital Pressure Switch - NPN
D = Digital Gauge
F = Low Profile Gauge PSI/bar
G = Low Profile Gauge bar/PSI
H = Low Profile Gauge PSI/bar with Pressure Range Indicator
J = Low Profile Gauge bar/PSI with Pressure Range Indicator
N = No Gauge with Port Plate (1/8 NPTF)
P = No Gauge with Port Plate (1/8 ISO 7/1 Rc)
Q = Round Gauge bar/PSI
R = Round Gauge PSI/bar
0 = No Gauge Port

B/C

D

F/G

H/J
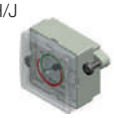
N/P
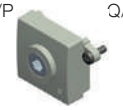
Q/R

0


Pressure Range
D = 3–45 PSIG/0.2–3 bar
E = 3–60 PSIG/0.2–4 bar
G = 7–125 PSIG/0.5–8 bar
H = 7–145 PSIG/0.5–10 bar

[3] Options
A00 = No Options
101 = Side Mounting Brackets
102 = Panel Nut
103 = Tamper Resistant
104 = Key Lockable
105 = High Temperature (80 °C/176 °F)
[4] 106 = Low Temperature (-40 °C/-40 °F)
109 = FKM Seals
113 = Stainless Steel Fasteners
114 = Provision for Key Lockable Option
117 = ATEX Zones 1–21
119 = Panel Bracket with Panel Nut
121 = Non-relieving
122 = Bottom Oriented Pressure Adjustment
202 = 105 + 109
2A9 = 105 + 106

101

103

104

119

122


1 Conforms to ISO standards 1179-1

2 Relieving Standard; use option 121 for Non-relieving

3 If multiple options are required, please use the online CAD configurator on the website to generate the part number (www.emerson.com), or consult factory

4 Compressed air must be dry enough so no ice formation is present on the product

Dimensions: mm (inches) Series 651/652 Manifold Regulator

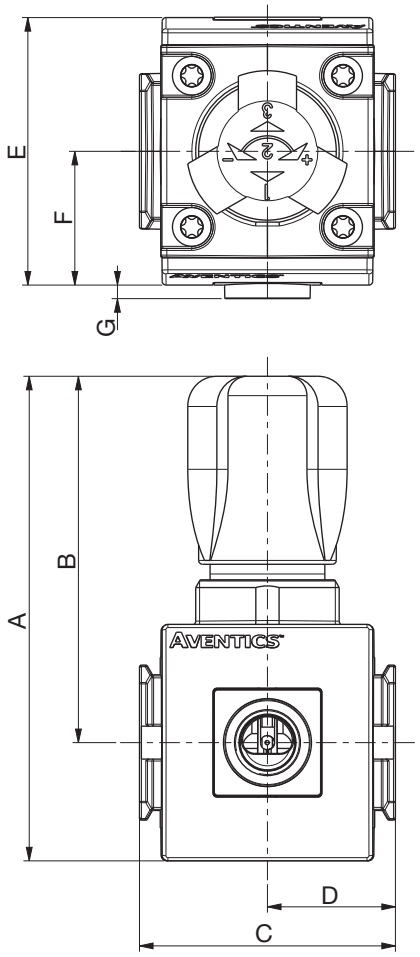

	A	B	C	D	E	F	G
651	103	77.5	50	25	58	29	0.3
	(4.06)	(3.05)	(1.97)	(0.98)	(2.28)	(1.14)	(0.01)
652	125	94.5	66	33	69	34.5	3.5
	(4.92)	(3.72)	(2.60)	(1.30)	(2.72)	(1.36)	(0.14)

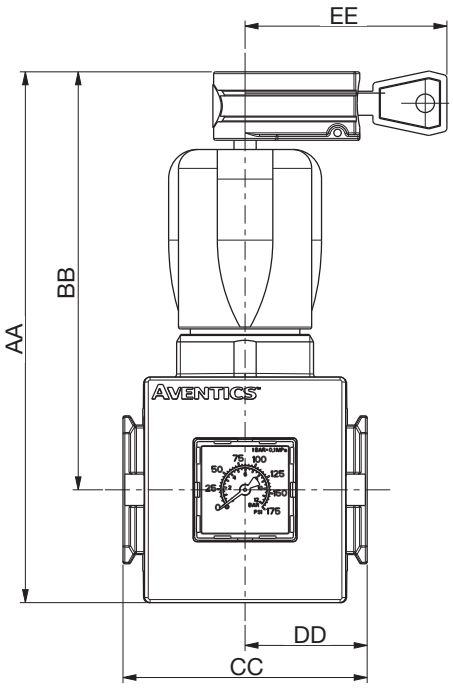

	AA	BB	CC	DD	EE
651	121.5	96	50	25	54.6
	(4.78)	(3.78)	(1.97)	(0.98)	(2.15)
652	151	120	66	33	55
	(5.94)	(4.72)	(2.60)	(1.30)	(2.17)

Cross Section - Series 651/652 Manifold Regulator

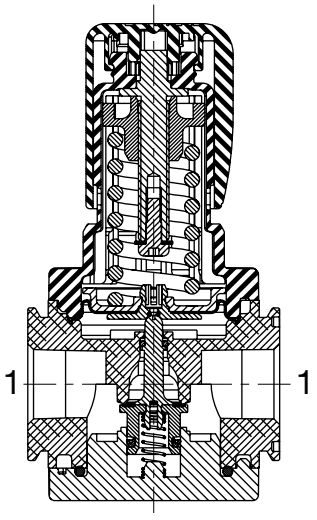

PARTICULATE FILTER/REGULATOR

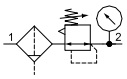



- High flow with a wide range of adjustable output pressure ranges
- Optional low profile gauge, round gauge, digital gauge or digital pressure switch
- Optional extended temperature range of -40 °F to 176 °F (-40 °C to 80 °C)
- Sintered polyethylene elements, with centrifugal separator, include 5, 25 and 40 Microns
- Threaded ports allow for individual or modular mounting
- Innovative two position plastic drain with manual and semi-automatic functions. Additional drains include an automatic style (brass) and manual (stainless steel)
- Polycarbonate and Aluminum bowls with a selection of sight gauge materials that meet industry and application requirements
- Key lockable and tamper resistant models
- Air purity class according to ISO 8573-1: 2010

Performance Data					
Series			**651**	**652**	**653**
Port Sizes			1/8, 1/4	1/4, 3/8, 1/2	1/2, 3/4, 1
Thread Type			NPTF, G & Rc		
Nominal Flow - Per ISO 6358 P1 = 145 PSI (10 bar) Setpoint P2 = 91.4 PSI (6.3 bar) ΔP = 14.5 PSI (1 bar)		Micron Rating	SCFM (L/min ANR)		
	1/8	5µ	25.1 (710)	-	-
		25µ	25.8 (730)	-	-
		40µ	28.5 (800)	-	-
	1/4	5µ	79.1 (2240)	133.0 (3800)	-
		25µ	83.4 (2360)	144.2 (4120)	-
		40µ	100.1 (2840)	150.5 (4300)	-
	3/8	5µ	-	155.8 (4450)	-
		25µ	-	189.7 (5420)	-
		40µ	-	196.0 (5590)	-
	1/2	5µ	-	157.2 (4490)	275.4 (7800)
		25µ	-	192.5 (5500)	278.9 (7900)
		40µ	-	203.0 (5800)	307.2 (8700)
	3/4	5µ	-	-	314.3 (8900)
		25µ	-	-	317.1 (9000)
		40µ	-	-	353.1 (10000)
	1	5µ	-	-	317.8 (9000)
		25µ	-	-	353.1 (10000)
		40µ	-	-	370.8 (10500)
Maximum Inlet Pressure PSIG (bar) P1		Polycarbonate Bowl	232 (16)		174 (12)
		Aluminum Bowl	232 (16)		290 (20)
Adjustable Pressure Ranges PSIG (bar) P2			3 to 45 (0.2 to 3)		
			3 to 60 (0.2 to 4)		
			7 to 125 (0.5 to 8)		
			7 to 145 (0.5 to 10)		
			-	-	7 to 232 (0.5 to 16)*
Ambient Temperature Range °F (°C)			-4 to 122 (-20 to 50)		
Fluid Temperature Range °F (°C)			-4 to 122 (-20 to 50)		
Fluid			Air or Inert Gas		
Weight lbs. (kg)		w/Polycarbonate Bowl	0.62 (0.304)	1.20 (0.546)	2.90 (1.315)
		w/Aluminum Bowl	0.99 (0.449)	1.52 (0.688)	3.45 (1.565)/3.90 (1.769)*

* High pressure assisted version

Materials in Contact with Fluid	
Body	Aluminum
Seals	NBR/FKM
Springs	Stainless Steel
Filter Element	Sintered Polyethylene
Bowl	Polycarbonate or Aluminum
Poppet	Brass
Stem	PA

Air Purity Class - ISO 8573-1: 2010	
5µ	(5:8:4)
25µ	(6:8:4)
40µ	(7:8:4)

How to Order - Particulate Filter/Regulator

8 651 A P B P 2 F A00 G N

Port Type
8 = NPTF
[1] G = ISO 228/1-G
J = ISO 7/1 Rc

Product Series
651
652
653

Revision
A

Product Type
K = Filter/Regulator - Particulate with Internal Flow Check (652 only)
P = Filter/Regulator - Particulate

Elements
A = 40 Micron (Green)
B = 5 Micron (White)
J = 25 Micron (Yellow)

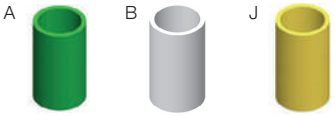

Bowl Type
K = Metal Bowl without Sight Gauge
L = Metal Bowl with Sight Gauge (Glass)
M = Metal Bowl with Sight Gauge (Polyamide)
N = Polycarbonate Bowl without Bowl Guard (651 only)
P = Polycarbonate Bowl with Bowl Guard

Port Size
1 = 1/8 (Series 651)
2 = 1/4 (Series 651 or 652)
3 = 3/8 (Series 652)
4 = 1/2 (Series 652 or 653)
5 = 3/4 (Series 653)
6 = 1 (Series 653)

Gauge Type
B = Digital Pressure Switch - PNP (Rated Pressure - 0-145 PSIG/0-10 bar)
C = Digital Pressure Switch - NPN (Rated Pressure - 0-145 PSIG/0-10 bar)
D = Digital Gauge (Rated Pressure - 0-145 PSIG/0-10 bar)
F = Low Profile Gauge PSI/bar
G = Low Profile Gauge bar/PSI
H = Low Profile Gauge PSI/bar with Pressure Range Indicator
J = Low Profile Gauge bar/PSI with Pressure Range Indicator
N = No Gauge with Port Plate (1/8 NPTF)
P = No Gauge with Port Plate (1/8 ISO 7/1 Rc)
Q = Round Gauge bar/PSI
R = Round Gauge PSI/bar
0 = No Gauge Port

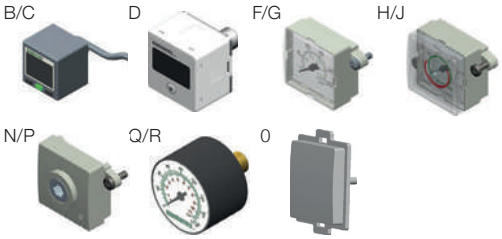

Drain Type
0 = No Drain
A = Auto Drain Normally Open
N = Manual - Semi-automatic Drain
Q = Manual Drain - Stainless Steel
C = Auto Drain Normally Closed
J = External Pulse Drain



Pressure Range
D = 3–45 PSIG/0.2–3 bar
E = 3–60 PSIG/0.2–4 bar
G = 7–125 PSIG/0.5–8 bar
H = 7–145 PSIG/0.5–10 bar
[2] N = 7–232 PSIG/0.5–16 bar (653 only)

[3] Options
A00 = No Options
101 = Side Mounting Brackets
102 = Panel Nut (651 and 652 only)
103 = Tamper Resistant
104 = Key Lockable
105 = High Temperature (80 °C/176 °F)
[4] 106 = Low Temperature (-40 °C/-40 °F)
109 = FKM Seals
113 = Stainless Steel Fasteners (652 and 653 only)
114 = Provision for Key Lockable Option
117 = ATEX Zones 1–21
119 = Panel Bracket with Panel Nut (651 and 652 only)
121 = Non-relieving
123 = Gauge Type Mounted for Right-to-Left Flow
202 = 105 + 109
2A9 = 105 + 106

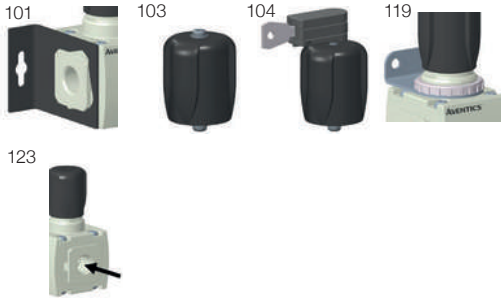

1 Conforms to ISO standards 1179-1

2 Metal Bowl Types K, L, or M only

3 If multiple options are required, please use the online CAD configurator on the website to generate the part number (www.emerson.com), or consult factory

4 Compressed air must be dry enough so no ice formation is present on the product. All bowls should be emptied prior to ambient temperatures dropping below 32 °F (0 °C)

Dimensions: mm (inches) Series 651/652/653 Particulate Filter/Regulator

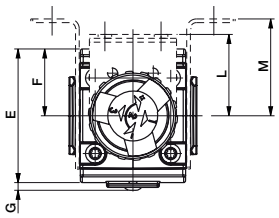

Series 651/652

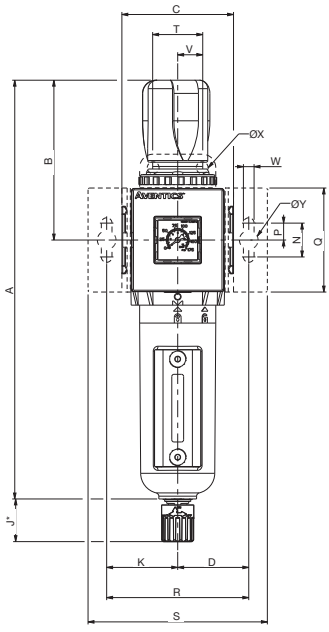

Series 653

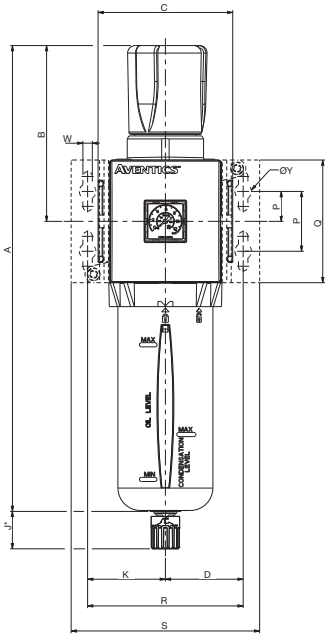

Series 653 High Pressure
232 PSIG (16 bar)

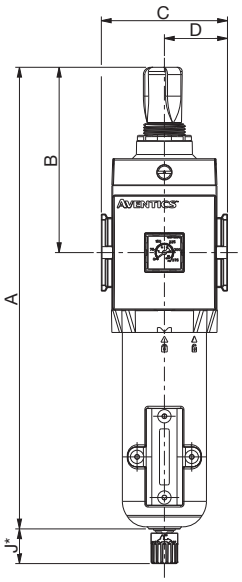

	A	B	C	D	E
653 High Pressure	329.5	132	90	45	93.6
	(12.97)	(6.20)	(3.54)	(1.77)	(3.69)

	F	G	H	J*
653 High Pressure	46.2	2.7	158.9	25
	(1.84)	(0.11)	(6.26)	(0.98)

	A	B	C	D	E	F	G	H	J*	K	L	M
651	215.5	77.5	50	25	58	29	3.4	116	25	35	42	44.5
	(8.48)	(3.05)	(1.97)	(0.98)	(2.28)	(1.14)	(0.13)	(4.57)	(0.98)	(1.38)	(1.65)	(1.75)
652	248	94.5	66	33	69	30.5	4	135	25	41.75	42	50
	(9.76)	(3.72)	(2.60)	(1.30)	(2.72)	(1.20)	(0.16)	(5.31)	(0.98)	(1.64)	(1.65)	(1.97)
653	315.2	117.5	90	45	93.6	46.8	2.7	155.4	25	52	-	62
	(12.41)	(4.63)	(3.54)	(1.77)	(3.69)	(1.84)	(0.11)	(6.12)	(0.98)	(2.05)	-	(2.44)

	N	P	Q	R	S	T	V	W	ØX	ØY	ZB
651	20	10	50	70	92	29	14.5	6.3	7	11	M30 x 2
	(0.79)	(0.39)	(1.97)	(2.76)	(3.62)	(1.14)	(0.57)	(0.25)	(0.28)	(0.43)	
652	20	10	61.5	84	105.5	29	14.5	6.3	7	11	M37 x 2
	(0.79)	(0.39)	(2.42)	(3.31)	(4.15)	(1.14)	(0.57)	(0.25)	(0.28)	(0.43)	
653	40	20	82	104	126	-	-	6.3	-	11	-
	(1.57)	(0.79)	(3.23)	(4.09)	(4.96)	-	-	(0.25)	-	(0.43)	

* Variable dimension based on type of drain that is specified;
if an Automatic Drain is specified, add another 5mm to J dimension.

Cross Section - Series 651/652/653 Particulate Filter/ Regulator

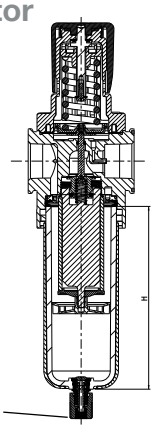

To remove bowl allow:
651 - 44mm (1.8in)
652 - 75mm (3.0in)
653 - 100mm (4.0in)
from the bottom of the bowl drain

Particulate Filter/Regulator Flow Charts

651 Filter-Regulator | 5µ Filtration | 1/8 Ports
P1 = 10 bar (145 PSIG)

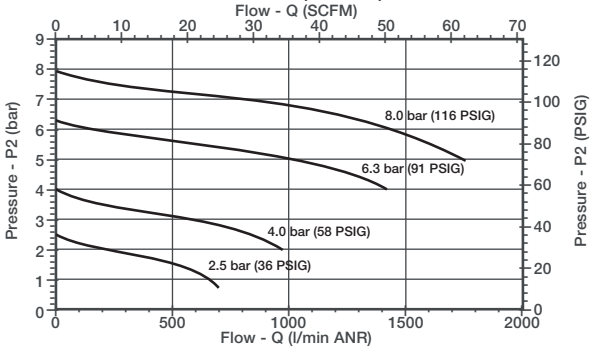

651 Filter-Regulator | 5µ Filtration | 1/4 Ports
P1 = 10 bar (145 PSIG)

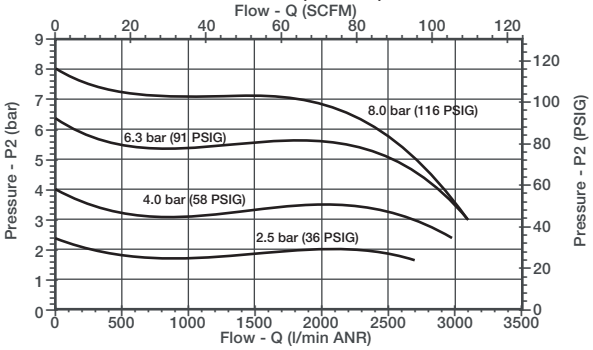

652 Filter-Regulator | 5µ Filtration | 1/4 Ports
P1 = 10 bar (145 PSIG)

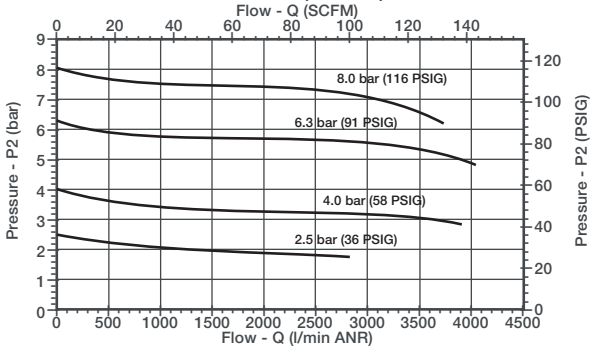

652 Filter-Regulator | 5µ Filtration | 3/8 Ports
P1 = 10 bar (145 PSIG)

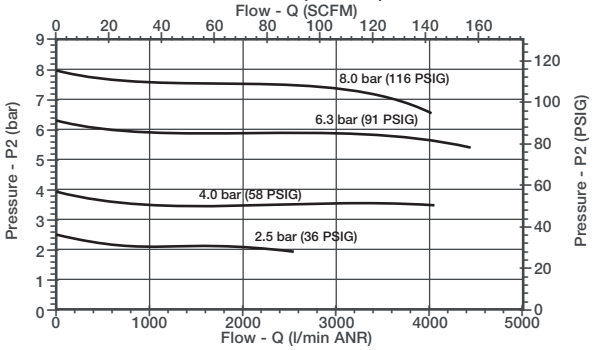

652 Filter-Regulator | 5µ Filtration | 1/2 Ports
P1 = 10 bar (145 PSIG)

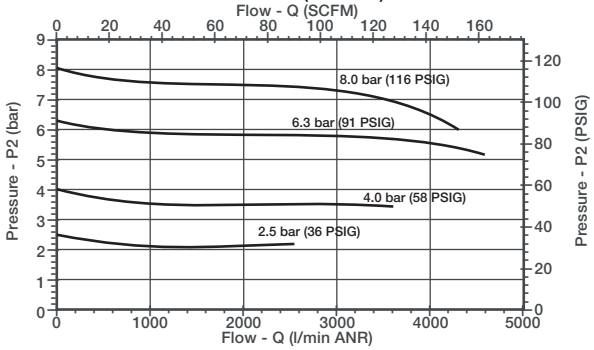

653 Filter-Regulator | 5µ Filtration | 1/2 Ports
P1 = 10 bar (145 PSIG)

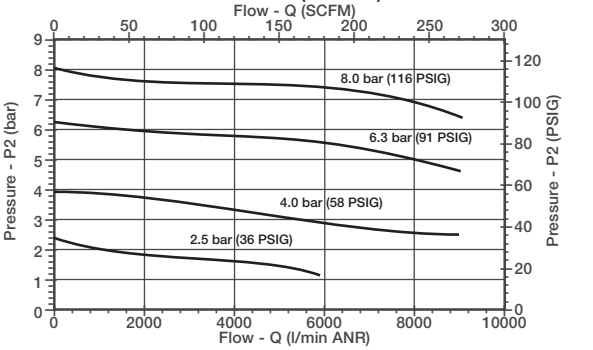

653 Filter-Regulator | 5µ Filtration | 3/4 Ports
P1 = 10 bar (145 PSIG)

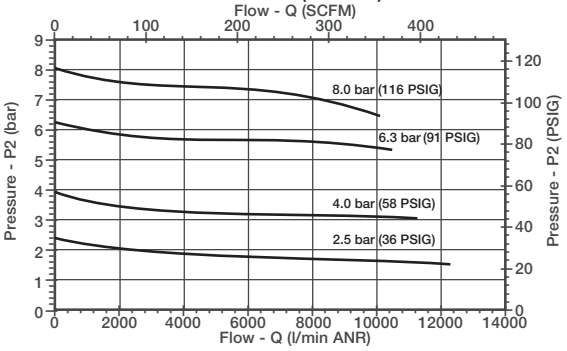

653 Filter-Regulator | 5µ Filtration | 1 Ports
P1 = 10 bar (145 PSIG)

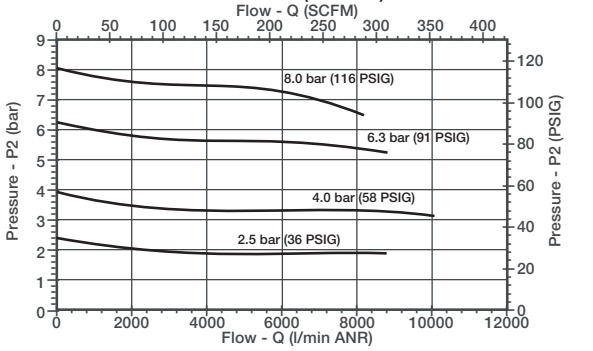

COALESCING FILTER/REGULATOR

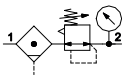



- Extensive range of coalescing filter elements to remove oil and sub-micron particles down to 0.01 microns. Air purity class according to ISO 8573-1: 2010
- Optional 3 micron pre-filter integrated in the coalescing element eliminates the need for a separate particulate element
- Optional low profile gauge, round gauge, digital gauge or digital pressure switch
- Optional extended temperature range up to 176 °F (80 °C)
- Threaded ports allow for individual or modular mounting
- Innovative two position plastic drain with manual and semi-automatic functions Additional drains include an automatic style (brass) and manual (stainless steel)
- Polycarbonate and Aluminum bowls with a selection of sight gauge materials that meet industry and application requirements
- Key lockable and tamper proof models

Performance Data					
Series			**651**	**652**	**653**
Port Sizes			1/8, 1/4	1/4, 3/8, 1/2	1/2, 3/4, 1
Thread Type			NPTF, G & Rc		
Nominal Flow - Per ISO 6358 P1 = 145 PSI (10 bar) Setpoint P2 = 91.4 PSI (6.3 bar) ΔP = 5 PSI (0.35 bar)		Micron Rating	SCFM (L/min ANR)		
	1/8	0.3 µm	8.5 (240)	-	-
		0.01 µm	5.9 (170)	-	-
	1/4	0.3 µm	10.3 (290)	11.3 (320)	-
		0.01 µm	7.2 (200)	10.2 (290)	-
	3/8	0.3 µm	-	20.5 (580)	-
		0.01 µm	-	18.9 (540)	-
	1/2	0.3 µm	-	20.8 (590)	26.5 (750)
		0.01 µm	-	19.1 (540)	21.2 (600)
	3/4	0.3 µm	-	-	26.5 (750)
		0.01 µm	-	-	21.2 (600)
	1	0.3 µm	-	-	26.5 (750)
		0.01 µm	-	-	21.2 (600)
Maximum /Inlet Pressure PSIG (bar) P1		Polycarbonate Bowl	232 (16)		174 (12)
		Aluminum Bowl	232 (16)		290 (20)
Adjustable Pressure Ranges PSIG (bar) P2			3 to 45 (0.2 to 3)		
			3 to 60 (0.2 to 4)		
			7 to 125 (0.5 to 8)		
			7 to 145 (0.5 to 10)		
			-		7 to 232 (0.5 to 16)*
Ambient Temperature Range °F (°C)			35 to 122 (1.7 to 50)		
Fluid Temperature Range °F (°C)			35 to 122 (1.7 to 50)		
Fluid			Air or Inert Gas		
Weight lbs. (kg)		w/Polycarbonate Bowl	0.68 (0.308)	1.24 (0.564)	2.90 (1.315)
		w/Aluminum Bowl	1.00 (0.453)	1.55 (0.705)	3.50 (1.565)/3.95 (1.792)*

* High pressure assisted version

Materials in Contact with Fluid	
Body	Aluminum
Seals	NBR/FKM
Springs	Stainless Steel
Filter Element	Borosilicate Microfiber & Polyester
Filter Element End Cap	Polypropylene
Bowl	Polycarbonate or Aluminum
Poppet	Brass

Air Purity Class - ISO 8573-1: 2010*	
0.3 µm	(3:7:3)
0.01 µm	(2:7:2)

* Series 651 maximum flow at 91.4 PSI (6.3 bar) inlet pressure to maintain air purity class is 3.5 SCFM (100 L/min)
* Series 652 maximum flow at 91.4 PSI (6.3 bar) inlet pressure to maintain air purity class is 10.6 SCFM (303 L/min)
* Series 653 maximum flow at 91.4 PSI (6.3 bar) inlet pressure to maintain air purity class is 25.0 SCFM (707 L/min)

How to Order - Coalescing Filter/Regulator

8 651 A C D P 2 F A00 G N

Port Type
8 = NPTF
[1] G = ISO 228/1-G
J = ISO 7/1 Rc

Product Series
651
652
653

Revision
A

Product Type
C = Filter/Regulator - Coalescing
K = Filter/Regulator - Coalescing with Internal Flow Check (652 only)

Elements
D = 0.3 Micron - Coalescer (Green)
E = 0.01 Micron - Coalescer (Red)
M = 0.3 Micron Coalescer with 3 Micron Prefilter (Green)
N = 0.01 Micron Coalescer with 3 Micron Prefilter (Red)

D/M 
E/N 

Bowl Type
K = Metal Bowl without Sight Gauge
L = Metal Bowl with Sight Gauge (Glass)
M = Metal Bowl with Sight Gauge (Polyamide)
N = Polycarbonate Bowl without Bowl Guard (651 only)
P = Polycarbonate Bowl with Bowl Guard

Port Size
1 = 1/8 (Series 651)
2 = 1/4 (Series 651 or 652)
3 = 3/8 (Series 652)
4 = 1/2 (Series 652 or 653)
5 = 3/4 (Series 653)
6 = 1 (Series 653)

Gauge Type
B = Digital Pressure Switch - PNP (Rated Pressure - 0-145 PSIG/0-10 bar)
C = Digital Pressure Switch - NPN (Rated Pressure - 0-145 PSIG/0-10 bar)
D = Digital Gauge (Rated Pressure - 0-145 PSIG/0-10 bar)
F = Low Profile Gauge PSI/bar
G = Low Profile Gauge bar/PSI
H = Low Profile Gauge PSI/bar with Pressure Range Indicator
J = Low Profile Gauge bar/PSI with Pressure Range Indicator
N = No Gauge with Port Plate (1/8 NPTF)
P = No Gauge with Port Plate (1/8 ISO 7/1 Rc)
Q = Round Gauge bar/PSI
R = Round Gauge PSI/bar
0 = No Gauge Port

Drain Type
0 = No Drain
A = Auto Drain Normally Open
N = Manual - Semi-automatic Drain
Q = Manual Drain - Stainless Steel
C = Auto Drain Normally Closed
J = External Pulse Drain

A 
N 
Q 
C 
J 

Pressure Range
D = 3–45 PSIG/0.2–3 bar
E = 3–60 PSIG/0.2–4 bar
G = 7–125 PSIG/0.5–8 bar
H = 7–145 PSIG/0.5–10 bar
[2] N = 7–232 PSIG/0.5–16 bar (653 only)

[3] Options
A00 = No Options
101 = Side Mounting Brackets
102 = Panel Nut (651 and 652 only)
103 = Tamper Resistant
104 = Key Lockable
105 = High Temperature (80 °C/176 °F)
109 = FKM Seals
113 = Stainless Steel Fasteners (652 and 653 only)
114 = Provision for Key Lockable Option
117 = ATEX Zones 1–21
119 = Panel Bracket with Panel Nut (651 and 652 only)
121 = Non-relieving
123 = Gauge Type Mounted for Right-to-Left Flow
202 = 105 + 109

101 
103 
104 
119 

123 

1 Conforms to ISO standards 1179-1

2 Metal Bowls Types K, L, or M only

3 If multiple options are required, please use the online CAD configurator on the website to generate the part number (www.emerson.com), or consult factory

B/C 
D 
F/G 
H/J 
N/P 
Q/R 
0 

Dimensions: mm (inches) Series 651/652/653 Coalescing Filter/Regulator

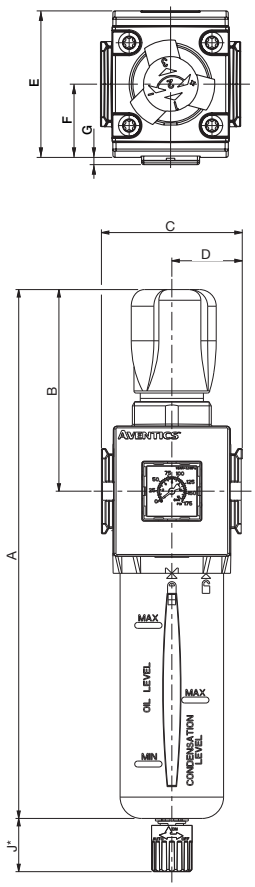

	A	B	C	D	E
651	215.5	77.5	50	25	58
	(8.48)	(3.05)	(1.97)	(0.98)	(2.28)
652	248	94.5	66	33	69
	(9.76)	(3.72)	(2.60)	(1.30)	(2.72)
653	311.8	117.5	90	45	93.6
	(12.28)	(4.63)	(3.54)	(1.77)	(3.69)

	F	G	H	J*
651	29	5	116	25
	(1.14)	(0.20)	(4.57)	(0.98)
652	30.5	2.5	135	25
	(1.20)	(0.10)	(5.31)	(0.98)
653	46.8	2.7	155.4	25
	(1.84)	(0.11)	(6.12)	(0.98)

* Variable dimension based on type of drain that is specified; if an Automatic Drain is specified, add another 5mm to J dimension.

653 Series High Pressure
232 PSIG (16 bar)

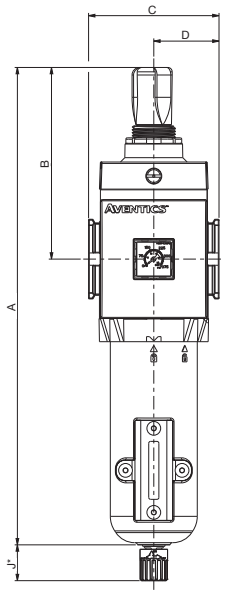

	A	B	C	D	E
653 High Pressure	329.5	132	90	45	93.6
	(12.97)	(6.20)	(3.54)	(1.77)	(3.69)

	F	G	H	J*
653 High Pressure	46.2	2.7	158.9	25
	(1.84)	(0.11)	(6.26)	(0.98)

Cross Section - Series 651/652/653 Coalescing Filter/Regulator

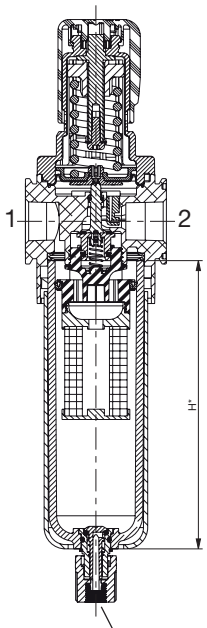

To remove bowl allow:
651 - 60mm (2.4in)
652 - 80mm (3.2in)
653 - 105mm (4.2in)
from the bottom of the bowl drain

Coalescing Filter/Regulator Flow Charts

651 Filter-Regulator | 0.3µ Filtration | 1/8 Ports
P1 = 10 bar (145 PSIG)

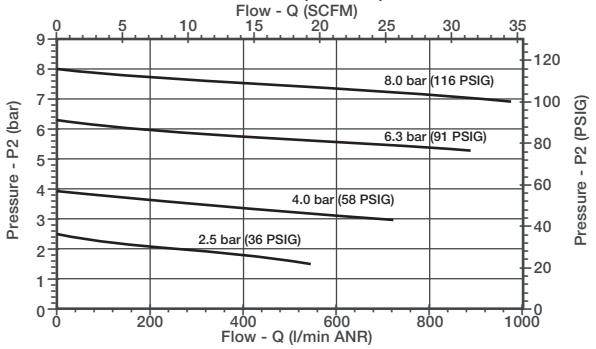

651 Filter-Regulator | 0.3µ Filtration | 1/4 Ports
P1 = 10 bar (145 PSIG)

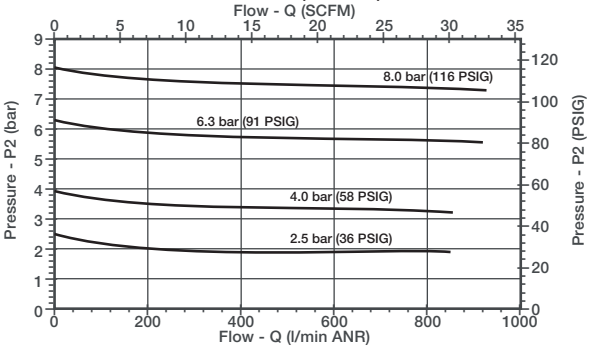

652 Filter-Regulator | 0.3µ Filtration | 1/4 Ports
P1 = 10 bar (145 PSIG)

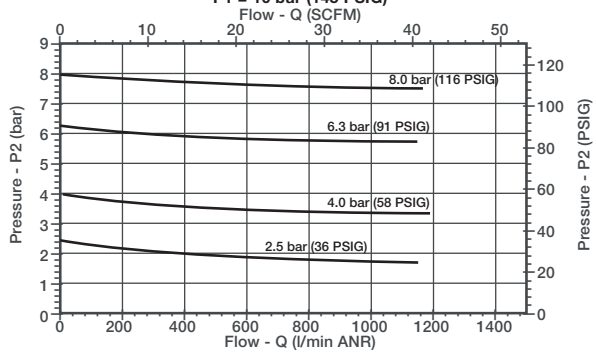

652 Filter-Regulator | 0.3µ Filtration | 3/8 Ports
P1 = 10 bar (145 PSIG)

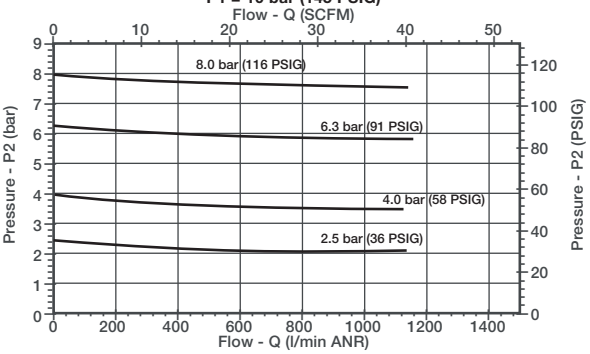

652 Filter-Regulator | 0.3µ Filtration | 1/2 Ports
P1 = 10 bar (145 PSIG)

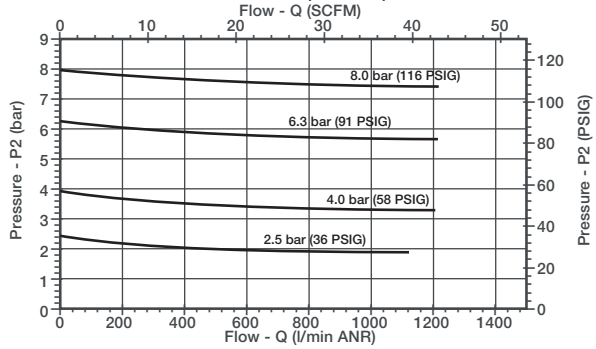

653 Filter-Regulator | 0.3µ Filtration | 1/2 Ports
P1 = 10 bar (145 PSIG)

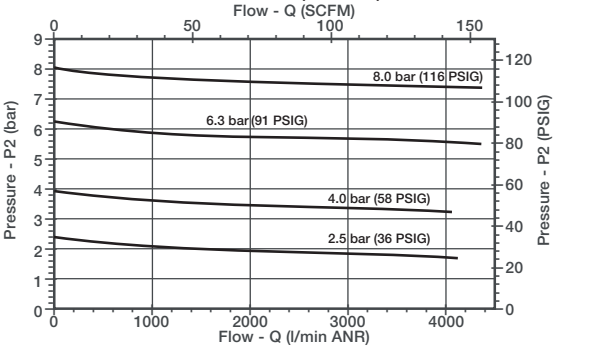

653 Filter-Regulator | 0.3µ Filtration | 3/4 Ports
P1 = 10 bar (145 PSIG)

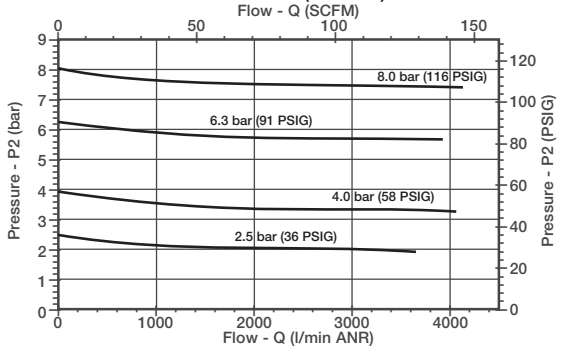

653 Filter-Regulator | 0.3µ Filtration | 1 Ports
P1 = 10 bar (145 PSIG)

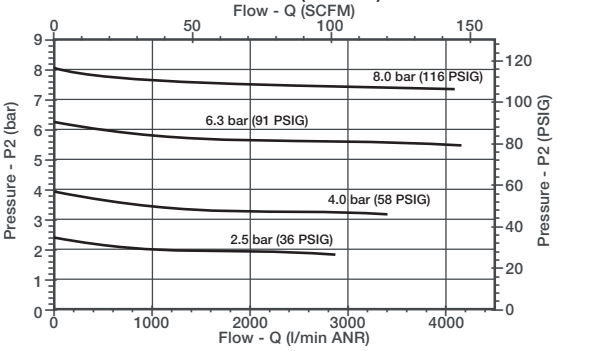

LUBRICATOR

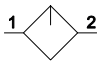



- Provides consistent reliable lubrication to the system
- Uses venturi type technology to distribute the lubrication into the compressed air line
- Optional electronic liquid level indicator provides condition monitoring
- Allows fill while under pressure from fill port or bowl by removing the fill plug
- Polycarbonate and Aluminum bowls with a selection of sight gauge materials that meet industry and application requirements
- Recommended oil type: Non-detergent type and without aggressive additives (VG32 - ISO3448)
- Threaded ports allow for individual or modular mounting

Performance Data				
Series		**651**	**652**	**653**
Port Sizes		1/8, 1/4	1/4, 3/8, 1/2	1/2, 3/4, 1
Thread Type		NPTF, G & Rc		
Nominal Flow - Per ISO 6358 P1 = 91.4 PSI (6.3 bar) ΔP = 11.6 PSI (0.8 bar)		SCFM (L/min ANR)		
	1/8	31.8 (900)	-	-
	1/4	68.5 (1940)	97.3 (2780)	-
	3/8	-	175.0 (5000)	-
	1/2	-	178.5 (5100)	328.4 (9300)
	3/4	-	-	459.1 (13000)
	1	-	-	459.1 (13000)
Maximum Pressure PSIG (bar)	Polycarbonate Bowl	145 (10)		
	Aluminum Bowl	145 (10)		232 (16)
Minimum Flow for Lubrication - SCFM (L/min)		0.16 (4.5)	0.71 (20)	8.83 (250)
Ambient Temperature Range °F (°C)		41 to 122 (5 to 50)		
Fluid Temperature Range °F (°C)		41 to 122 (5 to 50)		
Fluid		Air or Inert Gas		
Bowl Capacity - mL (fluid oz.)		45 (1.52)	90 (3.04)	200 (6.76)
Weight lbs. (kg)	Polycarbonate Bowl	0.53 (0.240)	1.16 (0.526)	2.05 (0.930)
	Aluminum Bowl	0.74 (0.334)	1.47 (0.667)	2.55 (1.157)

Materials in Contact with Fluid	
Body	Aluminum
Seals	NBR/FKM

How to Order - Lubricator

8 651 A L 0 P 2 0 A00 0 0

Port Type
8 = NPTF
[1] G = ISO 228/1-G
J = ISO 7/1 Rc

Product Series
651
652
653

Revision
A

Product Type
L = Lubricator

Bowl Type
K = Metal Bowl without Sight Gauge
L = Metal Bowl with Sight Gauge (Glass)
M = Metal Bowl with Sight Gauge (Polyamide)
N = Polycarbonate Bowl without Bowl Guard (651 only)
P = Polycarbonate Bowl with Bowl Guard

K/L/M 
N 
P 

Port Size
1 = 1/8 (Series 651)
2 = 1/4 (Series 651 or 652)
3 = 3/8 (Series 652)
4 = 1/2 (Series 652 or 653)
5 = 3/4 (Series 653)
6 = 1 (Series 653)

[2] **Options**
A00 = No Options
101 = Side Mounting Brackets
108 = Liquid Level Indicator - Electronic
109 = FKM Seals
117 = ATEX Zones 1–21

101 
108 

1 Conforms to ISO standards 1179-1

2 If multiple options are required, please use the online CAD configurator on the website to generate the part number (www.emerson.com), or consult factory

Dimensions: mm (inches) Series 651/652/653 Lubricator

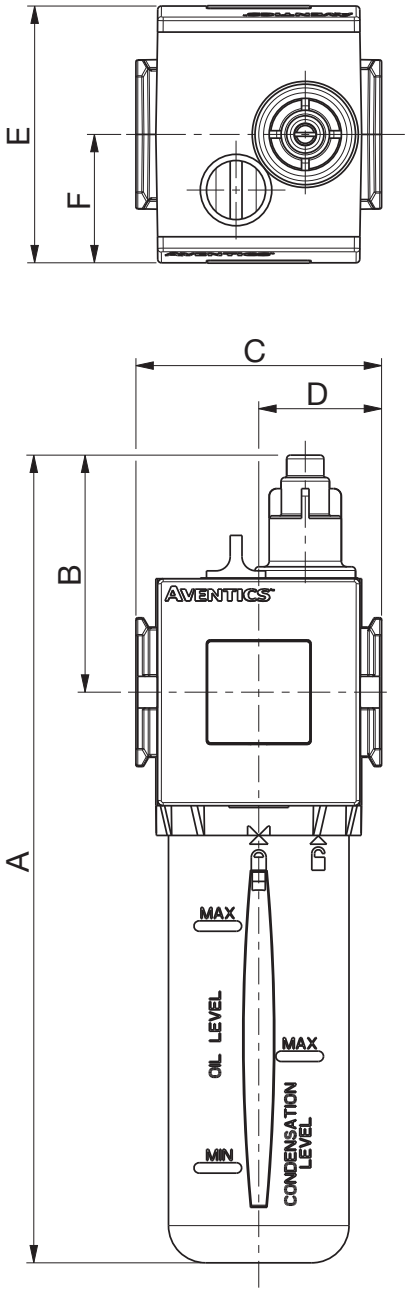

Cross Section - Series 651/652/653 Lubricator

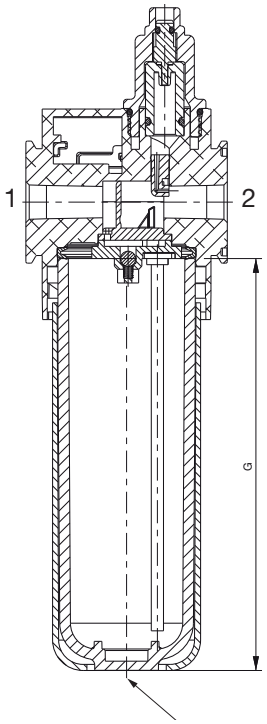

To remove bowl allow:
Series 651 - 20mm (0.8in)
Series 652/653 - 25mm (1.0in)
from the bottom of the bowl

	A	B	C	D	E	F	G
651	198	58	50	25	58	29	116
	(7.80)	(2.28)	(1.97)	(0.98)	(2.28)	(1.14)	(4.57)
652	217	64	66	33	69	30.5	135
	(8.54)	(2.52)	(2.60)	(1.30)	(2.72)	(1.20)	(5.31)
653	266	75	90	45	93	46.5	155
	(10.47)	(2.95)	(3.54)	(1.77)	(3.66)	(1.83)	(6.10)

SHUT OFF ISOLATION VALVE

- Robust and easy-to-operate shut off valve, with lockout (front or back) on handle
- Provides shut off to downstream machinery
- Optional low profile gauge provides clear indication of the downstream pressure, and when the downstream components can be safely removed when pressure (P2) is at zero
- Available as 3/2 or 2/2 construction
- Threaded ports allow for individual or modular mounting

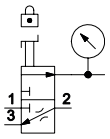



Performance Data							
Series		**651**		**652**		**653**	
Port Sizes		1/8, 1/4		1/4, 3/8, 1/2		1/2, 3/4, 1	
Thread Type		NPTF, G & Rc					
Nominal Flow - Per ISO 6358 P1 = 91.4 PSI (6.3 bar) ΔP = 14.5 PSI (1 bar)		SCFM (L/min ANR)					
		1 → 2	2 → 3	1 → 2	2 → 3	1 → 2	2 → 3
	1/8	50.8 (1440)	8.8 (250)	-	-	-	-
	1/4	166.7 (4720)	8.8 (250)	151.0 (4300)	8.1 (230)	-	-
	3/8	-	-	308.0 (8800)	8.1 (230)	-	-
	1/2	-	-	400.0 (11400)	8.1 (230)	458.0 (12970)	10.6 (300)
	3/4	-	-	-	-	1165.0 (33000)	10.6 (300)
	1	-	-	-	-	1833.0 (51900)	10.6 (300)
Maximum Inlet Pressure PSIG (bar)		232 (16)				290 (20)	
Ambient Temperature Range °F (°C)		14 to 122 (-10 to 50)					
Fluid Temperature Range °F (°C)		14 to 122 (-10 to 50)					
Fluid		Air or Inert Gas					
Weight lbs. (kg)		0.57 (0.260)		0.97 (0.438)		2.08 (0.943)	

Materials in Contact with Fluid	
Body	Aluminum
Ball	Chrome Plated Brass
Seat	PTFE
Seals	NBR/FKM

How to Order - Shut Off Isolation Valve

8 651 A 3 M 0 2 F A00 00

Port Type
8 = NPTF
[1] G = ISO 228/1-G
J = ISO 7/1 Rc

Product Series
651
652
653

Revision
A

Product Type
2 = 2/2 - Shut Off Valve
3 = 3/2 - Shut Off Valve

Valve Type
M = Manually Operated Ball Valve with Lockout

Pilot Valve/Electrical Connection
0 = No Electrical Connection

Port Size
1 = 1/8 (Series 651)
2 = 1/4 (Series 651 or 652)
3 = 3/8 (Series 652)
4 = 1/2 (Series 652 or 653)
5 = 3/4 (Series 653)
6 = 1 (Series 653)

[2] **Options**
A00 = No Options
101 = Side Mounting Brackets
109 = FKM Seals
111 = Metal Muffler
112 = Polyethylene Muffler
113 = Stainless Steel Fasteners
115 = Scissor Lock
117 = ATEX Zones 1–21
122 = Inverted Mounting
123 = Gauge Type Mounted for Right-to-Left Flow
2B9 = 111 + 115

101 122 123

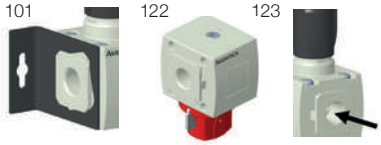

Gauge Type
F = Low Profile Gauge PSI/bar
G = Low Profile Gauge bar/PSI
H = Low Profile Gauge PSI/bar with Pressure Range Indicator
J = Low Profile Gauge bar/PSI with Pressure Range Indicator
N = No Gauge with Port Plate (1/8 NPTF)
P = No Gauge with Port Plate (1/8 ISO 7/1 Rc)
Q = Round Gauge bar/PSI
R = Round Gauge PSI/bar
0 = No Gauge Port

F/G H/J N/P

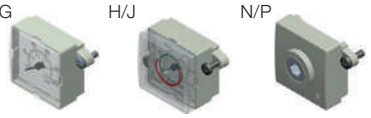

Q/R 0

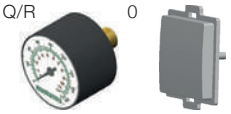

1 Conforms to ISO standards 1179-1

2 If multiple options are required, please use the online CAD configurator on the website to generate the part number (www.emerson.com), or consult factory

Dimensions: mm (inches) Series 651/652/653 Shut Off Isolation Valve

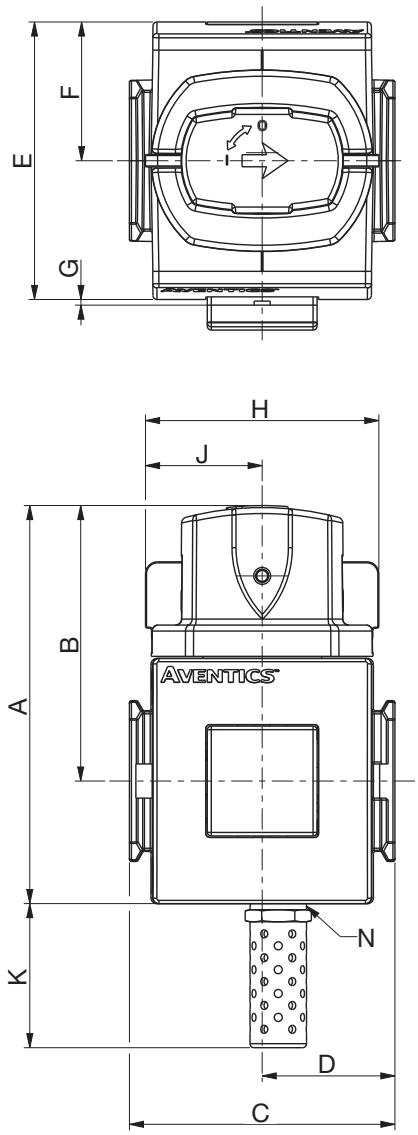

Cross Section - Series 651/652/653 Shut Off Isolation Valve

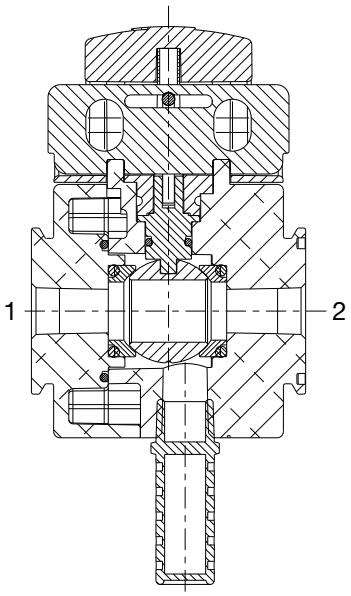

	A	B	C	D	E	F	G	H	J	K	L	M	N
651	90.5	65.5	50	25	58	29	4.4	58	29	35.5	38	9	1/4 NPTF or 1/4 ISO 228/1-G
	(3.56)	(2.58)	(1.97)	(0.98)	(2.28)	(1.14)	(0.17)	(2.28)	(1.14)	(1.40)	(1.50)	(0.35)	
652	99	68	66	33	69	34.5	2.5	58	29	35	38	9	1/4 NPTF or 1/4 ISO 228/1-G
	(3.90)	(2.68)	(2.60)	(1.30)	(2.72)	(1.36)	(0.10)	(2.28)	(1.14)	(1.38)	(1.50)	(0.35)	
653	120	79	90	45	93	46.5	1.9	58	29	46.7	38	9	3/8 NPTF or 3/8 ISO 228/1-G
	(4.72)	(3.11)	(3.54)	(1.77)	(3.66)	(1.83)	(0.07)	(2.28)	(1.14)	(1.84)	(1.50)	(0.35)	

SLOW START/ QUICK EXHAUST VALVE

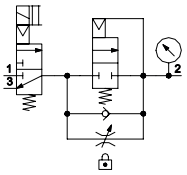



- High exhaust capacity for quick depletion of downstream pressure
- Slow Starts provide gradual increase of downstream pressure and full flow once 70% of inlet pressure is reached
- Threaded ports allow for individual or modular mounting
- Manual override (momentary-pulse type) is standard when using the horizontal solenoid operator
- Optional extended temperature range of -40 °F to 176 °F (-40 °C to 80 °C); for air piloted models only (excludes solenoid operators)
- Constructions includes: 3/2 Quick Exhaust, 3/2 Slow Start/Quick Exhaust, and 2/2 Slow Start
- Electrical connections: Coil with DIN terminals; DIN Plug, DIN Plug with LED, and coil with built-in M12 3 Pin male connection (24 VDC)
- Voltages: 24 VDC, 120/60 & 115/50 VAC, 230-50/60 VAC, 24-50/60 VAC



652/653 optional position detection verifies exhaust position

Performance Data							
Series		**651**		**652**		**653**	
Port Sizes		1/8, 1/4		1/4, 3/8, 1/2		1/2, 3/4, 1	
Thread Type		NPTF, G & Rc					
Nominal Flow - Per ISO 6358 P1 = 91.4 PSI (6.3 bar) ΔP = 14.5 PSI (1 bar)		SCFM (L/min ANR)					
		1 → 2	2 → 3	1 → 2	2 → 3	1 → 2	2 → 3
	1/8	27.5 (780)	36.7 (1040)	-	-	-	-
	1/4	35.3 (1000)	39.6 (1120)	53.0 (1500)	74.0 (2100)	-	-
	3/8	-	-	132.0 (3750)	151.0 (4300)	-	-
	1/2	-	-	164.0 (4650)	176.0 (5000)*	174.8 (4950)	238.0 (6740)
	3/4	-	-	-	-	257.1 (7280)	313.9 (8890)
	1	-	-	-	-	290.6 (8230)	316.4 (8960)
Minimum Operating Pressure PSIG (bar)		55 (3.8)**					
Maximum Operating Pressure PSIG (bar)		145 (10)				232 (16)***	
Ambient Temperature Range °F (°C)		14 to 122 (-10 to 50)					
Fluid Temperature Range °F (°C)		14 to 122 (-10 to 50)					
Fluid		Air or Inert Gas					
Weight lbs. (kg)		0.85 (0.387)		0.97 (0.438)		3.51 (1.592)	
Weight lbs. (kg) - with sensing position		—		1.87 (0.848)		3.80 (1.724)	

*Exhaust flow on the 1/2" 652 product with a spool position sensor is 220 (6300)
**If P(1) supply flow is restricted on valves with internal pilot supply, momentary exhaust leakage can occur.
*** Pressure rating is 145 psig (10 bar) when equipped with a digital gauge or digital pressure switch.

Materials in Contact with Fluid	
Body	Aluminum
Seals	NBR/FKM
Springs	Stainless Steel

Operating Data				
	24/DC	**120/60**	**240/60**	**24/60**
Power	—	9 VA	9 VA	9 VA
Holding	3.0 Watts	4 VA (3.0 Watts)		

Pin assignment of position detection sensor, M8 plug

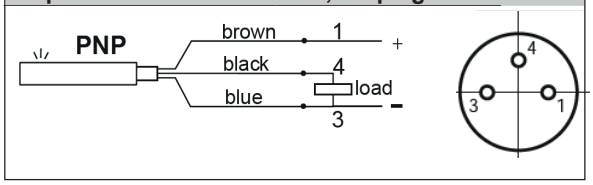

System Pressurization and Depressurization Curves

(with Automatic Soft Start Device)

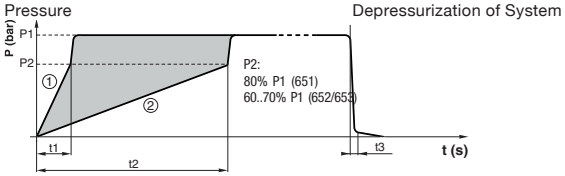

The adjustment range for the pressurization time lies between curves (1) and (2).

The transition to full flow takes place automatically as soon as the downstream pressure reaches 80% (651)/60% to 70% (652/653) of the upstream pressure.

Filling and venting times (seconds)	Series 651	Series 652	Series 653
t1 (with screw loosened by 6 (651)/7 (652)/8 (653) turns)	8.0	3.2	2.8
t2 (with screw loosened by 1 turn)	112.0	23.0	18.5
t3 (venting time)	4.8	1.0	0.5

These times correspond to a supply pressure (Pa) of 6.3 bar, a transition pressure (P2) of 80% (651)/60% to 70% (652/653) P1 (not adjustable) and a downstream capacity of **10 liters**.

How to Order - Slow Start/Quick Exhaust Valve

8 651 A 6 S 6 2 F A00 F1

Port Type
8 = NPTF
[1] G = ISO 228/1-G
J = ISO 7/1 Rc

Product Series
651
652
653

Revision
A

Product Type
0 = 3/2 Quick Exhaust Valve with Sensing Position (652 and 653 only)
1 = 3/2 Slow Start/Quick Exhaust Valve with Sensing Position (652 and 653 only)
4 = 2/2 - Slow Start
5 = 3/2 - Quick Exhaust
6 = 3/2 - Slow Start/Quick Exhaust

Valve Type
E = External Air Pilot (1/8 NPT air pilot signal port)
P = Internal Air Pilot (Available on 2/2 Slow Start only)
S = Solenoid Pilot

Pilot Valve/Electrical Connection
0 = No Electrical Connection
1 = Vertical Solenoid, without DIN Connector (651 or 652 only; must order with option 110)
2 = Vertical Solenoid. DIN Connector with LED (651 or 652 only; must order with option 110)
3 = Vertical Solenoid, DIN Connector w/o LED (651 or 652 only; must order with option 110)
[2] 4 = Vertical Solenoid, 3 Pin M12 Connection (651 or 652 only; must order with option 110)
5 = Horizontal Solenoid, without DIN Connector
6 = Horizontal Solenoid, DIN Connector with LED
7 = Horizontal Solenoid, DIN Connector without LED
[2] 8 = Horizontal Solenoid with 3 Pin M12 Connection
9 = Without Pilot Operator

Port Size
1 = 1/8 (Series 651)
2 = 1/4 (Series 651 or 652)
3 = 3/8 (Series 652)
4 = 1/2 (Series 652 or 653)
5 = 3/4 (Series 653)
6 = 1 (Series 653)

Voltage
FT = 115/50 VAC (653 only)
[3] EW = 120/60, 115/50 VAC
F1 = 24 VDC
FQ = 24 50/60 VAC
FH = 230 50/60 VAC (651 or 652)
F8 = 230/50 VAC (653 only)
DE = 230/60 VAC (653 only)
00 = No Voltage

[4] Options
A00 = No Options
101 = Side Mounting Brackets
109 = FKM Seals
110 = Without Manual Override
111 = Metal Muffler
112 = Polyethylene Muffler
113 = Stainless Steel Fasteners
[5] 117 = ATEX Zones 1–21
122 = Inverted Mounting
123 = Gauge Type Mounted for Right-to-Left Flow
201 = 110 + 111

101 123




Gauge Type
B = Digital Pressure Switch - PNP (Rated Pressure - 0-145 PSIG/0-10 bar)
C = Digital Pressure Switch - NPN (Rated Pressure - 0-145 PSIG/0-10 bar)
D = Digital Gauge (Rated Pressure - 0-145 PSIG/0-10 bar)
F = Low Profile Gauge PSI/bar
G = Low Profile Gauge bar/PSI
H = Low Profile Gauge PSI/bar with Pressure Range Indicator
J = Low Profile Gauge bar/PSI with Pressure Range Indicator
N = No Gauge with Port Plate (1/8 NPTF)
P = No Gauge with Port Plate (1/8 ISO 7/1 Rc)
Q = Round Gauge bar/PSI
R = Round Gauge PSI/bar
0 = No Gauge Port

B/C D F/G H/J

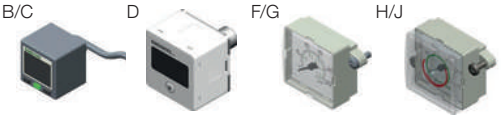

N/P Q/R 0

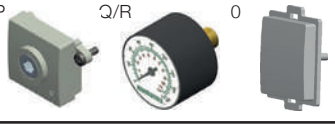

1 Conforms to ISO standards 1179-1

2 Available for 24 VDC voltage only

3 For Series 653, voltage EW = 120/60 VAC only

4 If multiple options are required, please use the online CAD configurator on the website to generate the part number (www.emerson.com), or consult factory

5 Option 117 (ATEX Zones 1–21) is available with Valve Type E or P. For Valve Type S (Solenoid Pilot), please select 9 under the Pilot Valve/Electrical Connection. Consult factory for further information

Dimensions: mm (inches) Series 651/652/653 Slow Start/Quick Exhaust Valve

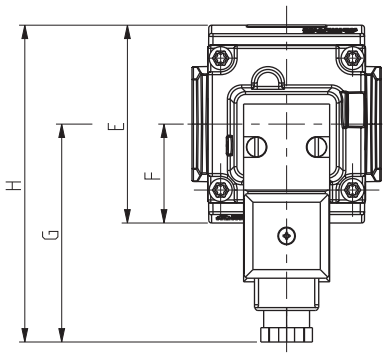

Cross Section - Series 651/652/653 Slow Start/Quick Exhaust Valve

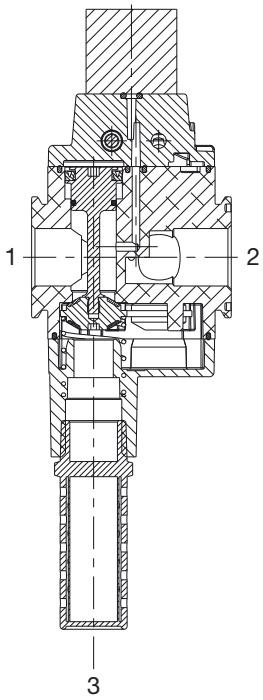

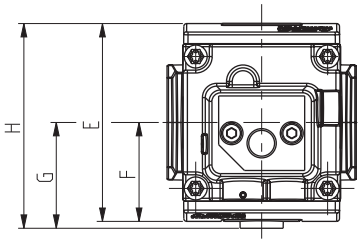

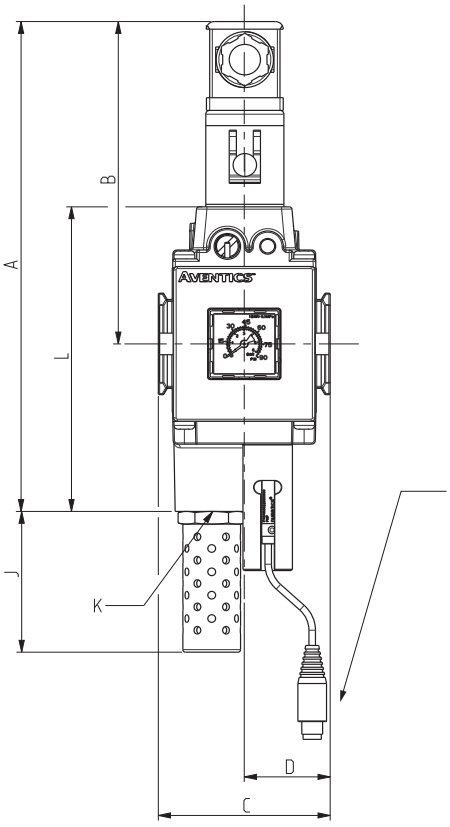

Product Type 0 and 1 - With Sensing Position (652 and 653 only)

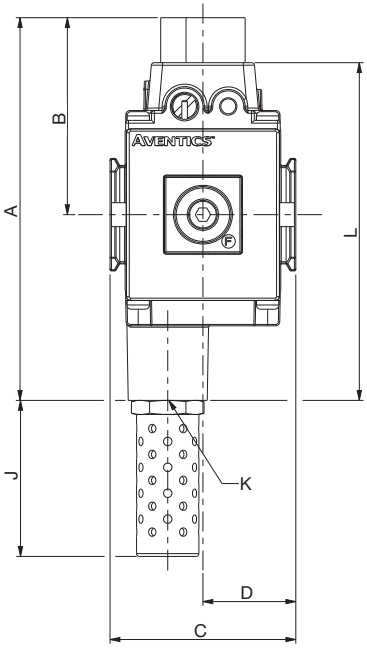

External Air Pilot

	A	B	C	D	E	F	G	H	J	K	L
651	113	59	50	25	58	29	31.5	60.5	34.5	1/4 NPTF or 1/4 ISO 228/1-G	97
	(4.45)	(2.32)	(1.97)	(0.98)	(2.28)	(1.14)	(1.24)	(2.38)	(1.36)		(3.82)
652	136	70	66	33	69	34.5	37	71.5	57	1/2 NPTF or 1/2 ISO 228/1-G	120
	(5.35)	(2.76)	(2.60)	(1.30)	(2.72)	(1.36)	(1.46)	(2.81)	(2.24)		(4.72)
653	158	81	90	45	93.1	46.5	48.4	95	81.2	1 NPTF or 1 ISO 228/1-G	142
	(6.22)	(3.19)	(3.54)	(1.77)	(3.67)	(1.83)	(1.91)	(3.74)	(3.20)		(5.59)

Solenoid Pilot

	A	B	C	D	E	F	G	H	J	K	L
651	170	116	50	25	58	29	72	101	34.5	1/4 NPTF or 1/4 ISO 228/1-G	97
	(6.69)	(4.57)	(1.97)	(0.98)	(2.28)	(1.14)	(2.83)	(3.98)	(1.36)		(3.82)
652	193	127	66	33	69	34.5	72	106.5	57	1/2 NPTF or 1/2 ISO 228/1-G	120
	(7.60)	(5.00)	(2.60)	(1.30)	(2.72)	(1.36)	(2.83)	(4.19)	(2.24)		(4.72)
653	214	137	90	45	93.1	46.5	94	140.5	81.2	1 NPTF or 1 ISO 228/1-G	142
	(8.43)	(5.39)	(3.54)	(1.77)	(3.67)	(1.83)	(3.70)	(5.53)	(3.20)		(5.59)

REDUNDANT SAFETY EXHAUST VALVE

- High exhaust capacity for quick depletion of downstream pressure
- Slow Starts provide gradual increase of downstream pressure and full flow once 70% of inlet pressure is reached
- Threaded ports allow for individual or modular mounting
- Manual override (momentary-pulse type) is standard when using the horizontal solenoid operator
- Constructions includes: 3/2 Quick Exhaust and 3/2 Slow Start/Quick Exhaust
- Electrical connections: Coil with DIN terminals; DIN Plug, DIN Plug with LED, and coil with built-in M12 3 Pin male connection (24 VDC)
- Voltages: 24 VDC, 120/60 & 115/50 VAC, 230-50/60 VAC, 24-50/60 VAC
- The Redundant Safety Exhaust Valve is Certified up to Category 3 and performance level d, depending on the application Category 4 and performance level e can be achieved
- B_{10} of 1,000,000 cycles for 652 and 500,000 cycles for 653

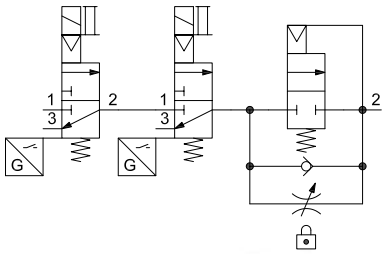



652/653 position detection verifies exhaust position

Performance Data - Fulfills the basic and well-tried safety principles in accordance to ISO 13849					
Series		**652**		**653**	
Port Sizes		1/4, 3/8, 1/2		1/2, 3/4, 1	
Thread Type		NPTF & G			
		SCFM (L/min ANR)			
		1 → 2	2 → 3	1 → 2	2 → 3
Nominal Flow - Per ISO 6358 P1 = 91.4 PSI (6.3 bar) ΔP = 14.5 PSI (1 bar)	1/4	53.0 (1500)	74.0 (2100)	-	-
	3/8	132.0 (3750)	151.0 (4300)	-	-
	1/2	176.2 (4997)	221.5 (6294)	174.8 (4950)	238.0 (6740)
	3/4	-	-	257.1 (7280)	313.9 (8890)
	1	-	-	290.6 (8230)	316.4 (8960)
B_{10} Data (cycles)		1,000,000		500,000	
Minimum Operating Pressure PSIG (bar)		55 (3.8)*			
Maximum Operating Pressure PSIG (bar)		145 (10)		232 (16)**	
Ambient Temperature Range °F (°C)		14 to 122 (-10 to 50)			
Fluid Temperature Range °F (°C)		14 to 122 (-10 to 50)			
Fluid		Air or Inert Gas			
Weight lbs. (kg)		3.80 (1.724)		8.00 (3.623)	

*If P(1) supply flow is restricted on valves with internal pilot supply, momentary exhaust leakage can occur.
** Pressure rating is 145 psig (10 bar) when equipped with a digital gauge or digital pressure switch.

Pin assignment of position detection sensor, M12 plug

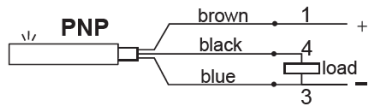

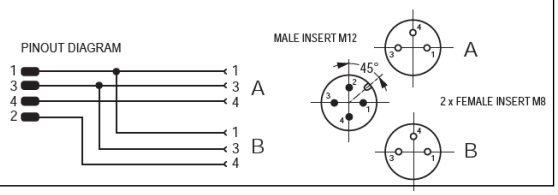

Materials in Contact with Fluid	
Body	Aluminum
Seals	NBR
Springs	Stainless Steel

Operating Data - Per Coil				
	24/DC	**120/60**	**240/60**	**24/60**
Power	—	9 VA	9 VA	9 VA
Holding	3.0 Watts	4 VA (3.0 Watts)		

System Pressurization and Depressurization Curves

(with Automatic Soft Start Device)

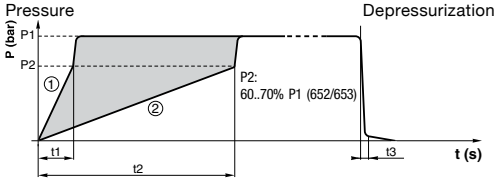

The adjustment range for the pressurization time lies between curves (1) and (2).

The transition to full flow takes place automatically as soon as the downstream pressure reaches 60% to 70% (652/653) of the upstream pressure.

Filling and venting times (seconds)	**Series 652**	**Series 653**
t1 (with screw loosened by 7 (652)/8 (653) turns)	3.2	2.8
t2 (with screw loosened by 1 turn)	23.0	18.5
t3 (venting time)	1.0	0.5

These times correspond to a supply pressure (Pa) of 6.3 bar, a transition pressure (P2) of 60% to 70% (652/653) P1 (not adjustable) and a downstream capacity of **10 liters**.

How to Order - Redundant Safety Exhaust Valve

8 652 A 7 S 6 2 F 111 F1

Port Type
8 = NPTF
[1] G = ISO 228/1-G

Product Series
652
653

Revision
A

Product Type
7 = 3/2 Redundant Safety Exhaust Valve
8 = 3/2 Redundant Safety Exhaust Valve with Slow Start Option

Valve Type
S = Solenoid Pilot

Pilot Valve/Electrical Connection
1 = Vertical Solenoid, without DIN Connector (652 only; must order with option 110)
2 = Vertical Solenoid. DIN Connector with LED (652 only; must order with option 110)
3 = Vertical Solenoid, DIN Connector w/o LED (652 only; must order with option 110)
[2] 4 = Vertical Solenoid, 3 Pin M12 Connection (652 only; must order with option 110)
5 = Horizontal Solenoid, without DIN Connector
6 = Horizontal Solenoid, DIN Connector with LED
7 = Horizontal Solenoid, DIN Connector without LED
[2] 8 = Horizontal Solenoid with 3 Pin M12 Connection

Port Size
2 = 1/4 (Series 652)
3 = 3/8 (Series 652)
4 = 1/2 (Series 652 or 653)
5 = 3/4 (Series 653)
6 = 1 (Series 653)

Voltage
FT = 115/50 VAC (653 only)
[3] EW = 120/60, 115/50 VAC
F1 = 24 VDC
FQ = 24 50/60 VAC
FH = 230 50/60 VAC (652 only)
F8 = 230/50 VAC (653 only)
DE = 230/60 VAC (653 only)

[4] **Options**
101 = Side Mounting Brackets
110 = Without Manual Override
111 = Metal Muffler (Muffler is mandatory)
113 = Stainless Steel Fasteners
201 = 110 + 111

101



Gauge Type (Single gauge mounted to outlet side valve. Inlet side valve will have no gauge port)
B = Digital Pressure Switch - PNP (Rated Pressure - 0-145 PSIG/0-10 bar)
C = Digital Pressure Switch - NPN (Rated Pressure - 0-145 PSIG/0-10 bar)
D = Digital Gauge (Rated Pressure - 0-145 PSIG/0-10 bar)
F = Low Profile Gauge PSI/bar
G = Low Profile Gauge bar/PSI
H = Low Profile Gauge PSI/bar with Pressure Range Indicator
J = Low Profile Gauge bar/PSI with Pressure Range Indicator
N = No Gauge with Port Plate (1/8 NPTF)
P = No Gauge with Port Plate (1/8 ISO 7/1 Rc)
Q = Round Gauge bar/PSI
R = Round Gauge PSI/bar
0 = No Gauge Port

B/C D F/G H/J



N/P Q/R 0



1 Conforms to ISO standards 1179-1

2 Available for 24 VDC voltage only

3 For Series 653, voltage EW = 120/60 VAC only

4 If multiple options are required, please use the online CAD configurator on the website to generate the part number (www.asco.com), or consult factory

Dimensions: mm (inches) Series 652/653 Redundant Safety Exhaust Valve

Cross Section - Series 652/653 Redundant Safety Exhaust Valve

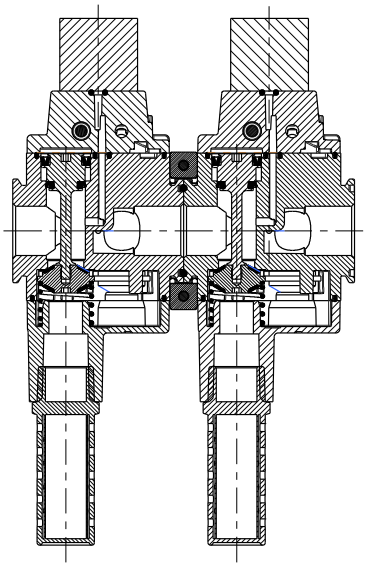

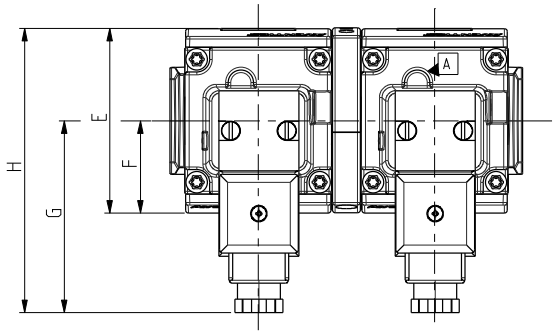

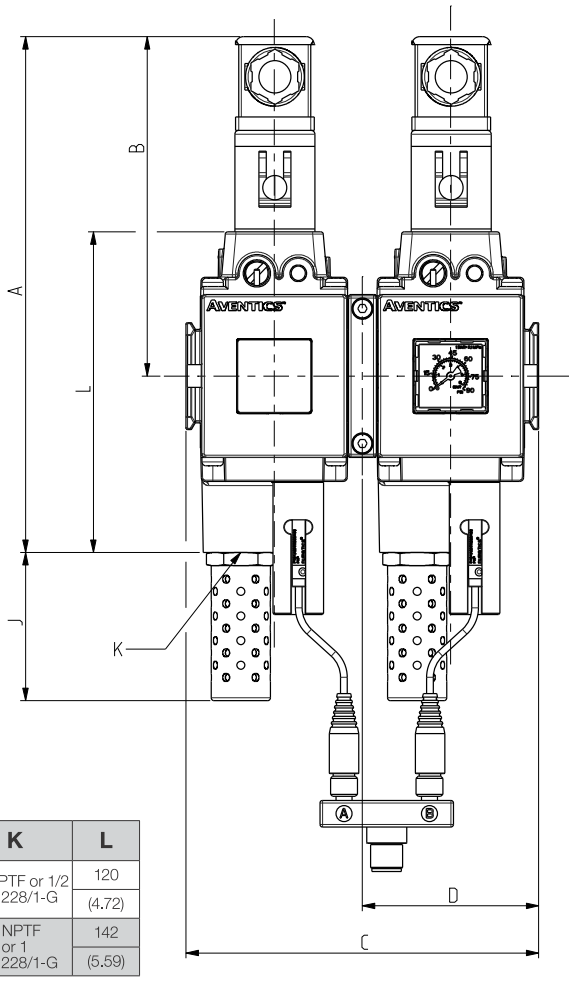

Solenoid Pilot

	A	B	C	D	E	F	G	H	J	K	L
652	193	127	132	66	69	34.5	72	106.5	57	1/2 NPTF or 1/2 ISO 228/1-G	120
	(7.60)	(5.00)	(5.20)	(2.60)	(2.72)	(1.36)	(2.83)	(4.19)	(2.24)		(4.72)
653	214	137	180	90	93.1	46.5	94	140.5	81.2	1 NPTF or 1 ISO 228/1-G	142
	(8.43)	(5.39)	(7.09)	(3.54)	(3.67)	(1.83)	(3.70)	(5.53)	(3.20)		(5.59)

DIVERTER BLOCK



- Ideal for branching off primary series air prep manifold to add additional products, such as adding another regulator or dividing lubricated and un-lubricated compressed air lines
- 1/8 or pad mount interface ports on top of product for adding pressure switches/sensors or other condition monitoring devices
- 1/4 ports (Series 651), 3/8 ports (Series 652), or 1/2 ports (Series 653) on the front and back provide additional flexibility to attach or branch off the main manifold. It can also be used to feed auxiliary air to air prep assemblies that require additional air capacity, such as a bank of manifold regulators





Performance Data				
Series		**651**	**652**	**653**
Port Sizes	Left, Right & Bottom	1/4 & Flanged	1/2 & Flanged	1 & Flanged
	Front & Back**	1/4	3/8	1/2
Thread Type		NPTF, G & Rc		
Top Port (for Pressure Switch/Pressure Sensor)		1/8*		
Maximum Pressure PSIG (bar)		232 (16)		290 (20)
Fluid		Air or Inert Gas		
Weight lbs. (kg)		0.41 (0.188)	0.73 (0.331)	1.67 (0.753)

* Different for EU
** To access front & back ports remove covers and plugs

Materials in Contact with Fluid	
Body	Aluminum

How to Order

Diverter Block

8 651 A D 0 0 2 T A00 0 0

Port Type
8 = NPTF
[1] G = ISO 228/1-G
J = ISO 7/1 Rc

Product Series
651
652
653

Revision
A

Product Type
D = Diverter Block

Options[2]
A00 = No Options
101 = Side Mounting Brackets
117 = ATEX Zones 1–21

Pressure Switch Interface
C = Pad Mount (Europe only)
T = 1/8 (US only)

Port Size
2 = 1/4 (Series 651)
4 = 1/2 (Series 652)
6 = 1 (Series 653)

1 Conforms to ISO standards 1179-1
2 If multiple options are required, please use the online CAD configurator on the website to generate the part number (www.emerson.com), or consult factory

Dimensions: mm (inches) Series 651/652/653 Diverter Block

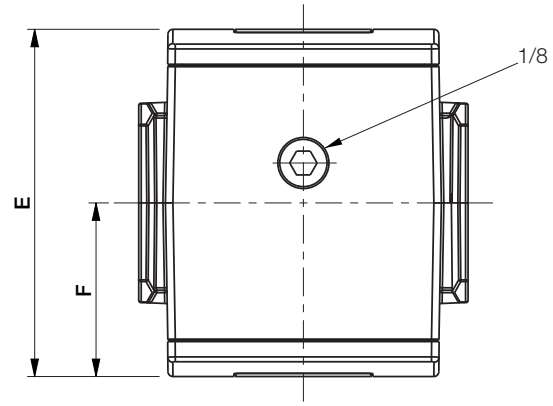

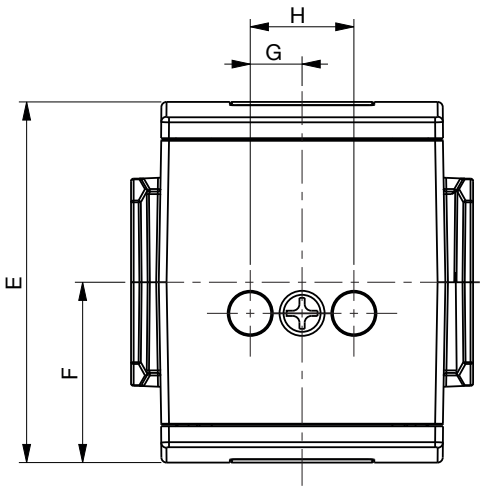

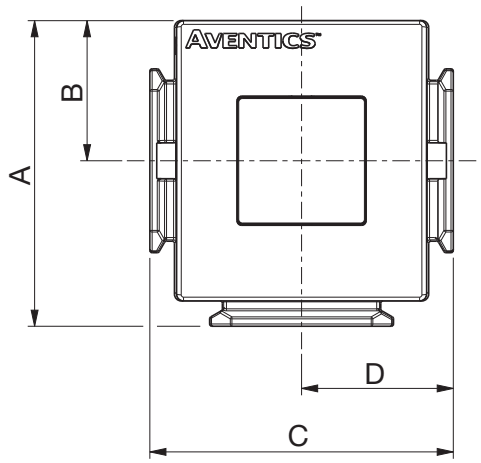

	A	B	C	D	E	F	G	H
651	54.4	25	50	25	58	29	10	20
	(2.14)	(0.98)	(1.97)	(0.98)	(2.28)	(1.14)	(0.39)	(0.79)
652	66.5	30.5	66	33	70	35	10	20
	(2.62)	(1.20)	(2.60)	(1.30)	(2.76)	(1.38)	(0.39)	(0.79)
653	89.5	41	90	45	93	46.5	10	20
	(3.52)	(1.61)	(3.54)	(1.77)	(3.66)	(1.83)	(0.39)	(0.79)

Cross Section - Series 651/652/653 Diverter Block

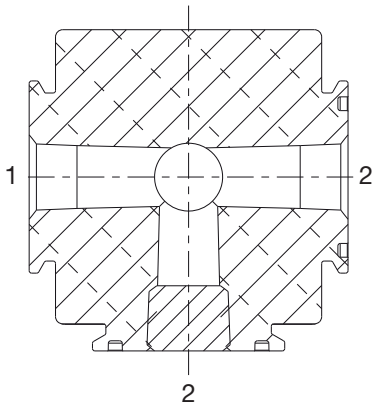

LOCKOUT VALVE

- Modular assembly to Series 652 or 653 manifold using common Body-to-Body clamps
- Provides high exhaust capacity of downstream pressure
- Available as Full Flow Start or Slow Start
- Slow Start feature allows operator to turn knob counter clock wise to “On” position, gradually ramping up downstream pressure
- Bright yellow body with red knob is easily identified as an emergency shut off device
- Typically located as the final component in an Air Preparation assembly

3/2 Lockout Valve with Slow Start Feature



3/2 Lockout Valve



Performance Data					
Series		**652**		**653**	
Port Sizes*		1/2		1	
Nominal Flow		1 → 2	2 → 3	1 → 2	2 → 3
	SCFM (L/min ANR)	116 (5905)	116 (5905)	347 (9850)	347 (9850)
Ambient Temperature Range °F (°C)		40 to 120 (4 to 50)			
Fluid Temperature Range °F (°C)		40 to 120 (4 to 50)			
Maximum Pressure PSIG (bar)		150 (10.3)		246 (17.0)	
Fluid		Air or Inert Gas			
Weight lbs. (kg)	Standard	2.71 (1.23)		6.37 (2.89)	
	Slow Start	3.06 (1.39)		7.12 (3.23)	

*Ports are not threaded (grey flanges). Easily connect to Series 652 or 653 Manifold. When connecting to pipe, use end plate kits on page 52.

Materials in Contact with Fluid	
Body	Aluminum
Seals	NBR
Spool	Aluminum

How to Order

Lockout Valve

T 652 A 5 L 0 4 0 A00 00

Port Type
T = Modular Mounting

Product Series
652
653

Revision
A

Product Type
5 = 3/2 - Quick Exhaust
6 = 3/2 - Slow Start/Quick Exhaust

Valve Type
L = Manually Operated Lockout

Port Size
4 = 1/2 (Series 652)
6 = 1 (Series 653)

* **Options**
A00 = No Option
111 = Metal Muffler
115 = Scissor Lock
2B9 = 111 + 115

* If multiple options are required, please use the online CAD configurator on the website to generate the part number (www.emerson.com), or consult factory.

Dimensions: mm (inches) Series 652/653 Lockout Valve

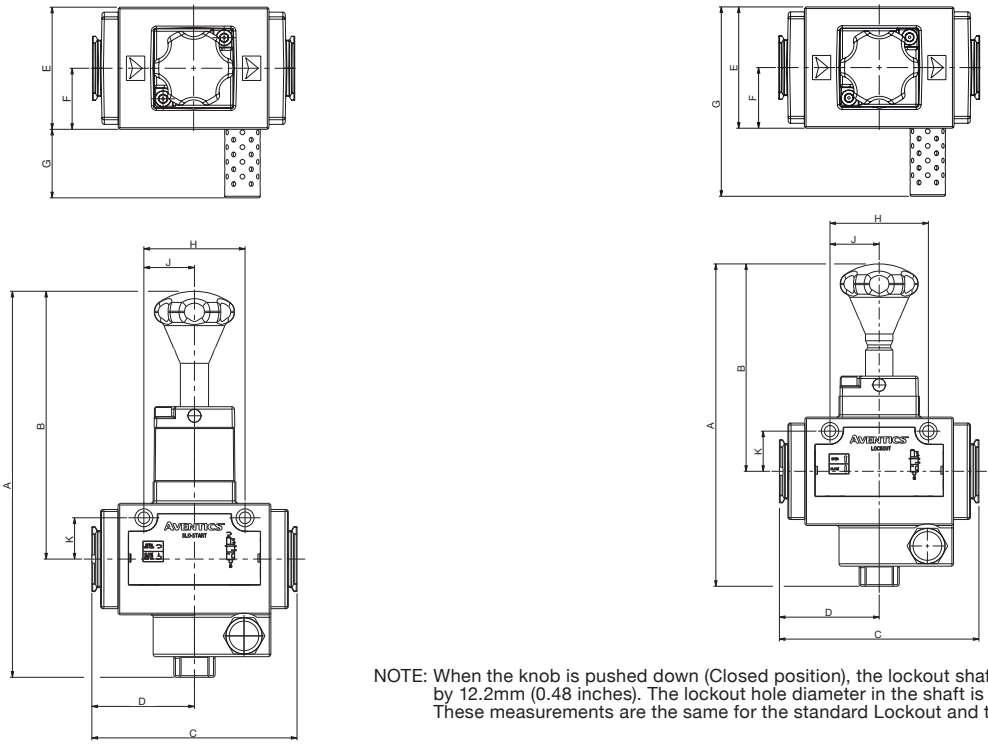

NOTE: When the knob is pushed down (Closed position), the lockout shaft extends out of the bottom by 12.2mm (0.48 inches). The lockout hole diameter in the shaft is 11.2mm (0.44 inches). These measurements are the same for the standard Lockout and the Slow Start version.

3/2 Lockout Valve with Slow Start Feature

	A	B	C	D	E
652	237.5	164.9	126.2	63.1	76.2
	(9.35)	(6.49)	(4.97)	(2.48)	(3.00)
653	291	198.8	150.5	75.3	101.6
	(11.46)	(7.83)	(5.93)	(2.96)	(4.00)

	F	G	H	J	K
652	38.1	42.7	62.2	31.1	25.4
	(1.50)	(1.68)	(2.45)	(1.22)	(1.00)
653	50.8	77.3	82.8	41.4	27.9
	(2.00)	(3.04)	(3.26)	(1.63)	(1.10)

3/2 Lockout Valve

	A	B	C	D	E
652	204	131.3	126.2	63.1	76.2
	(8.03)	(5.17)	(4.97)	(2.48)	(3.00)
653	247.8	155.6	150.5	75.3	101.6
	(9.76)	(6.13)	(5.93)	(2.96)	(4.00)

	F	G	H	J	K
652	38.1	119	62.2	31.1	25.4
	(1.50)	(4.69)	(2.45)	(1.22)	(1.00)
653	50.8	178.9	82.8	41.4	27.9
	(2.00)	(7.04)	(3.26)	(1.63)	(1.10)

3/2 Lockout Valve with Slow Start Feature Cross Section

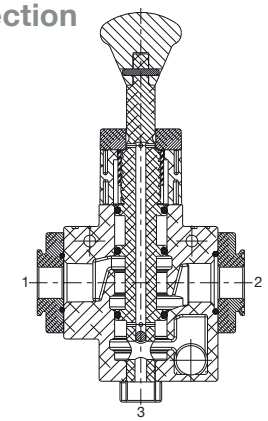

3/2 Lockout Valve Cross Section

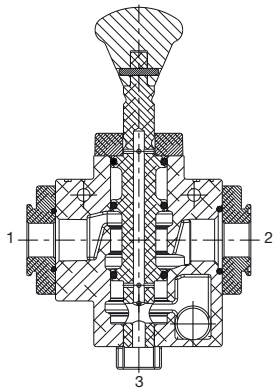

AIR PREPARATION MANIFOLD ASSEMBLIES

How to Order - Air Preparation Manifold Assemblies

8 651 A S L D 2 C 0 0 A00

Port Type
8 = NPTF
[1] G = ISO 228/1-G
J = ISO 7/1 Rc

Product Series
651
652
653

Revision
A

Product Type
S = FRL Assembly

Air Flow Direction
L = Configure Air Flow P(1) Left - P(2) Right
R = Configure Air Flow P(1) Right - P(2) Left

Number of Stations

A	=	1	K	=	11
B	=	2	L	=	12
C	=	3	M	=	13
D	=	4	N	=	14
E	=	5	O	=	15
F	=	6	P	=	16
G	=	7	Q	=	17
H	=	8	R	=	18
I	=	9	S	=	19
J	=	10	T	=	20

Options
A00 = No Options
117 = ATEX Zones 1–21 Ex

Mounting Type
0 = No Mounting
C = End Plates, Body-to-Body Assembly Clamps & Wall/Panel Brackets
F = End Plates and Body-to-Body Assembly Clamps
L = Side Mounting Brackets

C



F



L (651/652)



L (653)



End Plate Port Size
0 = None
2 = 1/4 (Series 651)
4 = 1/2 (Series 652)
6 = 1 (Series 653)
7 = 1-1/4 (Series 653)

[1] Conforms to ISO standards 1179-1

All manifolds come assembled and fully tested to your configuration.

If additional support is required in the middle of a manifold. Please specify kit number P699AT502467001. This kit contains one Wall/Panel Bracket (also referred to as support bracket or mounting bracket). This bracket can be installed at the factory or ordered separately as a kit. This kit contains two screws, which allows customers to easily attach the bracket to the back of any of the Body-to-Body clamps in the manifold assembly.

After selecting the top level assembly part number, please refer to each of the How to Order charts within this catalog to determine the specific product that is required in the manifold assembly. The How to Order charts are located on the following pages:

Particulate Filter	Page 4	Lubricator	Page 27
Coalescing Filter	Page 8	Shut Off Isolation Valve	Page 30
Regulator	Page 12	Slow Start/Quick Exhaust Valve	Page 33
Manifold Regulator	Page 16	Diverter Block	Page 36
Particulate Filter/Regulator	Page 19	Lockout Valve	Page 38
Coalescing Filter/Regulator	Page 23		

How to Order - Series 651/652 Air Preparation Manifold Assemblies

Example #1

The following example assembly includes six stations of the Series 652 products, manifold end plates with mounting brackets and an additional support bracket between station 1 and 2. The manifold air flow is from Left-to-Right. Port type is NPTF. Port size is 1/2.

The regulator is configured for a bottom oriented pressure adjustment (option 122). The Shut Off Isolation Valve is configured with a Low Profile Gauge, with pressure range indicators.

Example Order

Assembly	**8652ASLF4C00A00**	**Series 652 Air Prep Assembly**
Station #1	8652A3M04H11100	Series 652 Shut Off Isolation Valve
	P699AT502467001	Support Bracket
Station #2	8652ABBP4JA000N	Series 652 Particulate Filter
Station #3	8652AFDM4FA000A	Series 652 Coalescing Filter
Station #4	8652AR004F122G0	Series 652 Regulator
Station #5	8652AD004TA0000	Series 652 Diverter Block
Station #6	8652A6S74FA00F1	Series 652 Slow Start/Quick Exhaust Solenoid Valve
	Assembled	

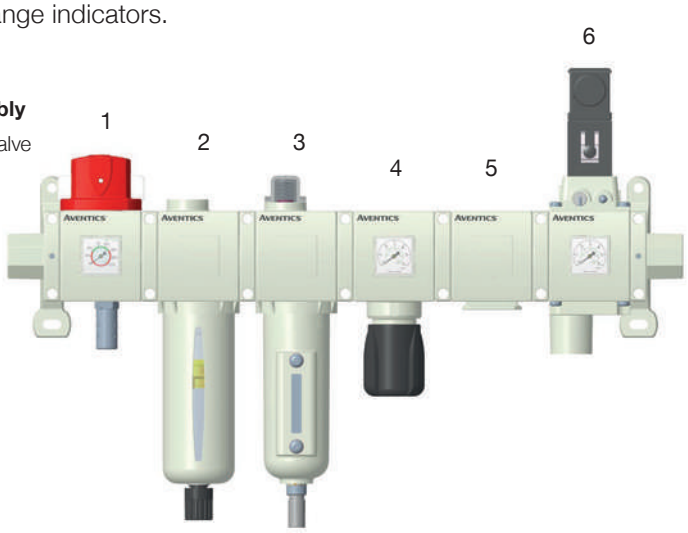

Example #2

The following example assembly includes five stations of the Series 651 products and side mounting brackets. The manifold air flow is from Right-to-Left. Port type is ISO 228/1-G. Port size is 1/4.

The Lubricator is configured with an Electronic Liquid Level Indicator (option 108). The Shut Off Isolation Valve uses a combination option (270), which is configured when you use a Metal Muffler (111) and a Low Profile Gauge that requires a Right-to-Left flow (123). The Coalescing Filter/Regulator also uses a combination option. In this case, a combination option (243) includes a Key Lockable Handle (104) and a Low Profile Gauge that requires a Right-to-Left flow (123).

Example Order

Assembly	**G651ASRE0L00A00**	**Series 651 Air Prep Assembly**
Station #5	G651AL0M2010800	Series 651 Lubricator
Station #4	G651AD002TA0000	Series 651 Diverter Block
Station #3	G651ACDM2F243GA	Series 651 Coalescing Filter-Regulator
Station #2	G651ABBM2JA000A	Series 651 Particulate Filter
Station #1	G651A3M02F27000	Series 651 Shut Off Isolation Valve
	Assembled	

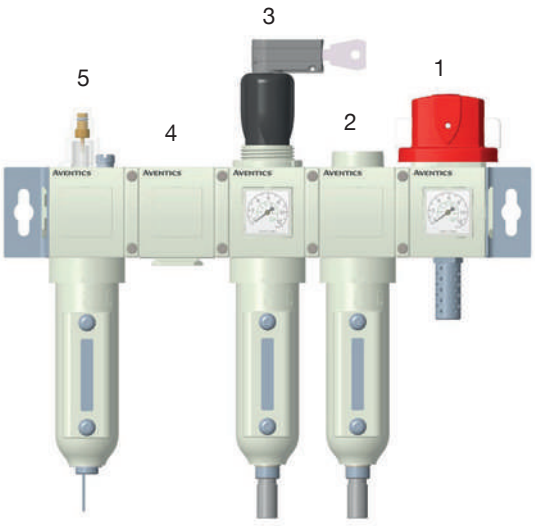

If multiple options are required, please use the online CAD configurator on the website to generate the part number (www.emerson.com), or consult factory.

MOUNTING BRACKETS

Mounting Options

Series 651 Side Mounting Brackets Kit#: P651AT503860001
Series 652 Side Mounting Brackets Kit#: P652AT503860002
Series 653 Side Mounting Brackets Kit#: P653AT503860003

651/Series 652

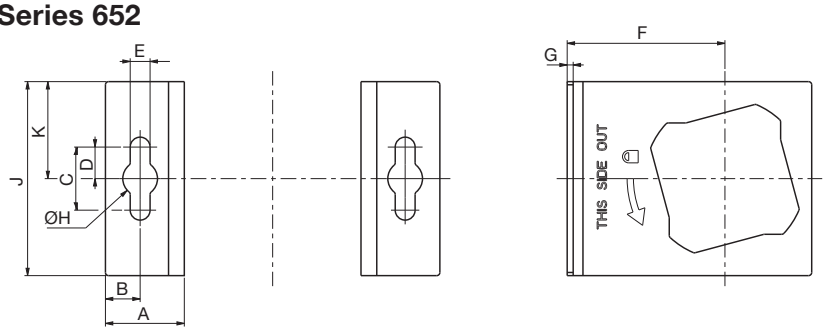

Series 653

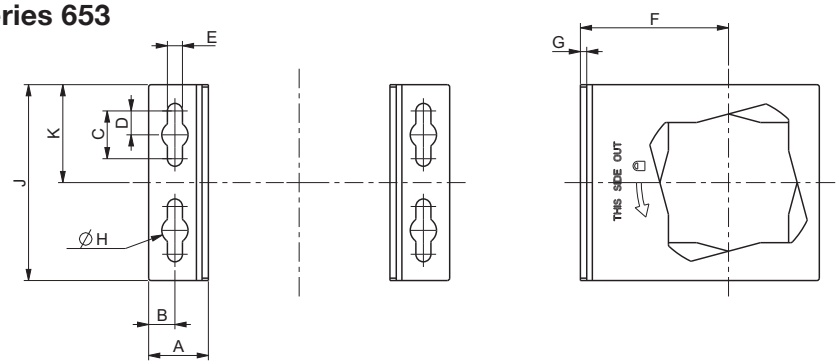

	A	B	C	D	E
651	25	11	20	10	6.3
	(0.98)	(0.43)	(0.79)	(0.39)	(0.25)
652	25	11	20	10	6.3
	(0.98)	(0.43)	(0.79)	(0.39)	(0.25)
653	25	11	20	10	6.3
	(0.98)	(0.43)	(0.79)	(0.39)	(0.25)

	F	G	ØH	J	K
651	44.5	1.3	11	50	25
	(1.75)	(0.05)	(0.43)	(1.97)	(0.98)
652	50	1.9	11	61.5	30.8
	(1.97)	(0.07)	(0.43)	(2.42)	(1.21)
653	62	2.65	11	82	41
	(2.44)	(0.10)	(0.43)	(3.23)	(1.61)

Wall/Panel Bracket Kit#: P699AT502467001

A	B	C	D	E	F
26	13	92	46	6	3
(1.02)	(0.51)	(3.62)	(1.81)	(0.24)	(0.12)

G	ØH	J	K	L	M
6.5	6.5	8	18	109	44.5
(0.26)	(0.26)	(0.31)	(0.71)	(4.29)	(1.75)

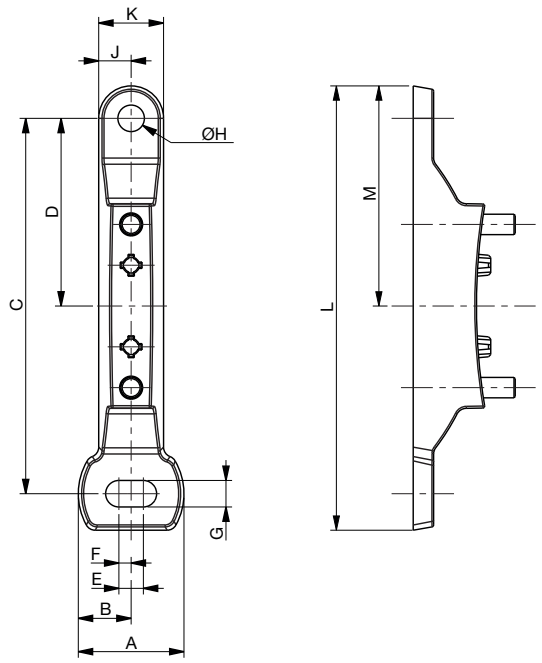

BOWLS

Bowl and Drain Options

Polycarbonate Bowl/Guard with Semi-automatic/Manual Drain

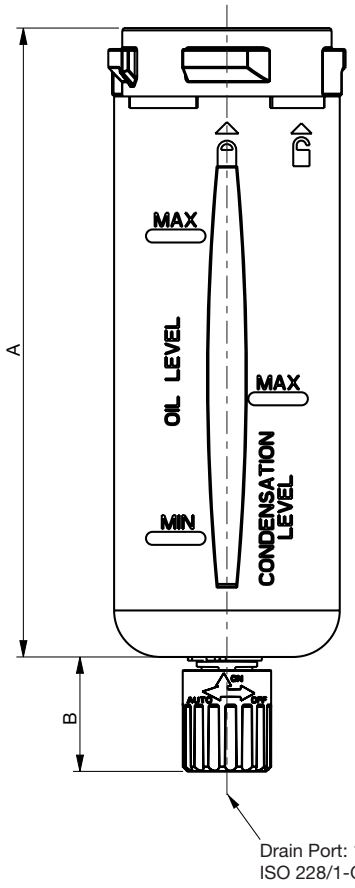

Polycarbonate Bowl/Guard with Stainless Steel Manual Drain

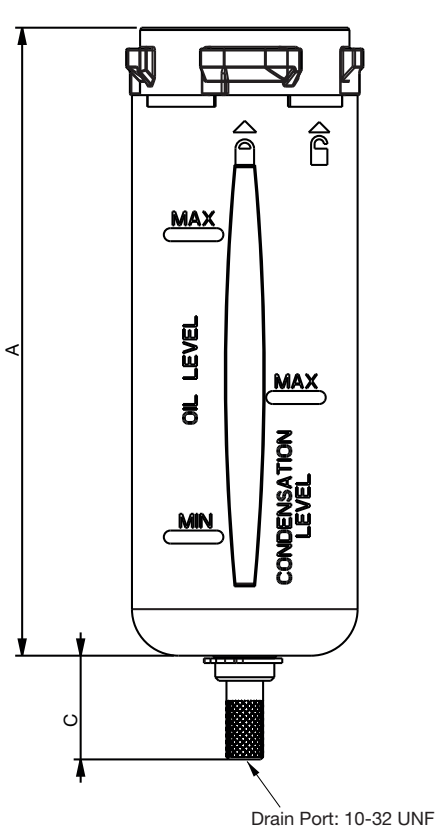

Metal Bowl with Automatic Drain

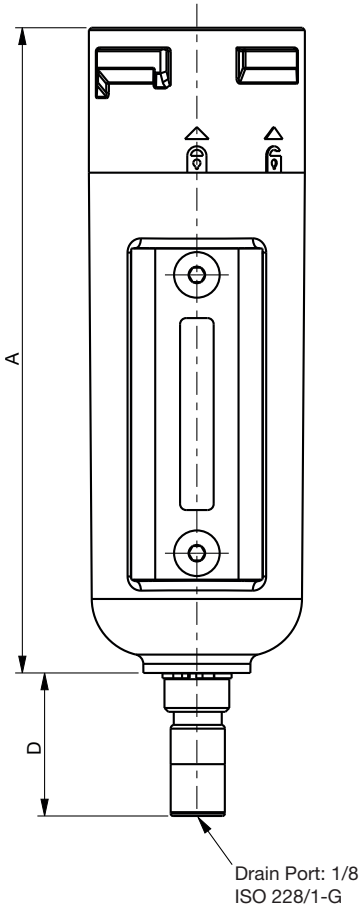

	A	B	C	D
651	116	25	22.3	30
	(4.57)	(0.98)	(0.88)	(1.18)
652	135	25	22.3	30
	(5.31)	(0.98)	(0.88)	(1.18)
653	155.4	25	22.3	30
	(6.12)	(0.98)	(0.88)	(1.18)

Please allow the following clearance for bowl removal - mm (inch):

	651	652	653
Particulate Filter or Filter/Reg (from bottom of drain)	44 (1.8)	75 (3.0)	100 (4.0)
Coalescing Filter or Filter/Reg (from bottom of drain)	60 (2.4)	80 (3.2)	105 (4.2)
Coalescing Filter - High Flow (from bottom of drain)	-	-	125 (4.9)
Lubricator (from bottom of bowl)	20 (0.8)	25 (1.0)	25 (1.0)

Bowl Type	Series	Filter - Max Condensate Level (ml)				Lubricator - Max Oil Level (ml)	
		Semi\Manual	Manual	Automatic	No Drain	No Option	w/Liquid Level Indicator
Polycarbonate	651	30	30	15	30	45	35
	652	50	50	35	50	90	80
	653	80	80	65	80	200	190
Aluminum	651	30	30	15	30	45	35
	652	50	50	35	50	90	80
	653	80	80	65	80	200	190

SERIES 280 DIGITAL PRESSURE SWITCH

Performance Data		
Port Size/Thread Type	1/8 NPTF Male x 10/32 UNF Female	
	1/8 ISO 7/1 Rc Male x M5-0.8 Female	
Ambient Temperature Range °F (°C)	32 to 122 (0 to 50)	
Rated Pressure Range PSIG (bar)	0 to 145 (0 to 10)	
Maximum Pressure PSIG (bar)	217.5 (15)	
Fluid	Air or Inert Gas	
Set Pressure Resolution	kPa	1
	kgf/cm²	0.01
	bar	0.01
	PSI	0.1
LCD Display	7 Segment; Red/Green Color	
Sampling Rate	5 times per second	
Repeatability	≤ +/- 0.2% F.S. +/- 1 Digit	
Hysteresis (window comparator mode)	Adjustable	

Electrical Ratings		
Power Supply Voltage	12 to 24 VDC +/- 10% Ripple (P-P) 10% or Less	
Current Consumption	≤ 45 mA (with no load)	
Switch Output	PNP Open Collector /	NPN Open Collector
Max. Load Current	125 mA	125 mA
Max Supply Voltage	24 VDC	30 VDC
Residual Voltage	≤ 1.5 V	≤ 1.5 V
Load Current	125 mA	125 mA
Enclosure Rating	IP40	

Materials in Contact with Fluid	
Enclosure Case	PBT + 30 GF
Port	Nickel Plated Brass
Seals	NBR

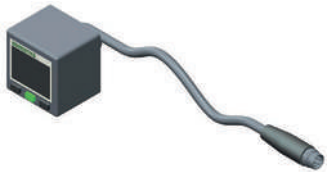

How to Order

Model Numbers

DPS280PNQ8 1/8 NPTF (PNP)
DPS280NNQ8 1/8 NPTF (NPN)
DPS280PRQ8 1/8 ISO 7/1 Rc (PNP)
DPS280NRQ8 1/8 ISO 7/1 Rc (NPN)

Note: All part numbers include an 8mm Pico 4 Pin connector and 2 meter cable (4mm O.D. x 24 AWG)

Display Panel Instructions

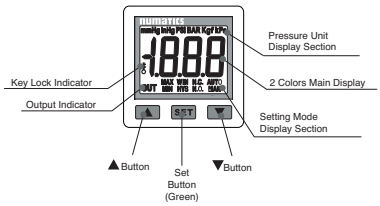

Switch Wiring

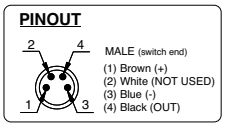

Output Circuit Wiring

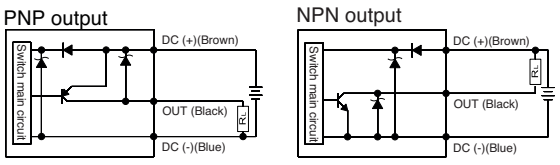

Accessory Numbers

Model	Accessory Description
DPS280-8-4-ST-2	Mating Cable 8mm 4 Pin 2 Meter
DPS280-8-4-ST-5	Mating Cable 8mm 4 Pin 5 Meter
PC0402MEETA03000	Patch Cable M8 4 Pin X M12 3 Pin 2 Meter

Model	Accessory Description
PMK280-C	Panel Mount Kit with Cover

SERIES PS182 PRESSURE SWITCH

Performance Data	
Port Size/Thread Type	1/8 NPTF or 1/8 ISO 228/1-G (BSPP)
Ambient Temperature Range °F (°C)	-40 to 250 (-40 to 121)
Set Point Adjustment Ranges PSI (bar)	2–10 (0.14 to 0.69), 6–30 (0.41 to 2.07), 20–130 (1.38 to 8.96)
Set Point Tolerance	+ 1 PSI or 5%
Maximum Pressure PSIG (bar)	600 (41.4)
Fluid	Air or Inert Gas
Maximum Cycle Rate per Minute	200
Hysteresis Adjustment	10%

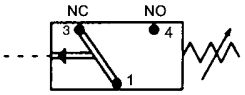



Electrical Ratings	
Switch Contact Rating	4 Amp (Gold Plated Contacts)
Voltage Range	12 VDC to 250 VDC
Enclosure Rating	IP65
Electrical Connection	3 Pin M12

Materials in Contact with Fluid	
Enclosure Case	Anodized Aluminum
Body	Brass
Seals	NBR

How to Order

Model Numbers

PS182CAN01-2 1/8 NPTF (Pin out is compatible with G3 Fieldbus Digital I/O)
PS182CAN01 1/8 NPTF
PS182CAG01 1/8 ISO 228/1-G (BSPP)

PS182 Series Pressure Switch

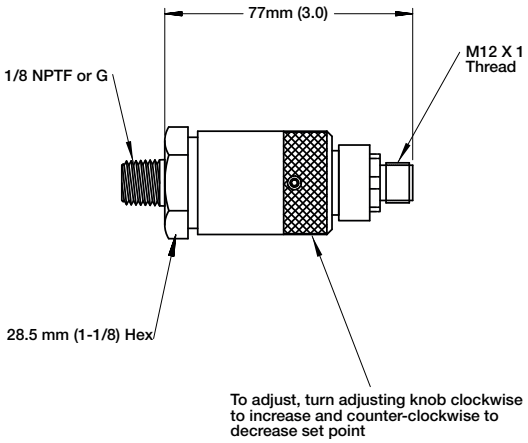

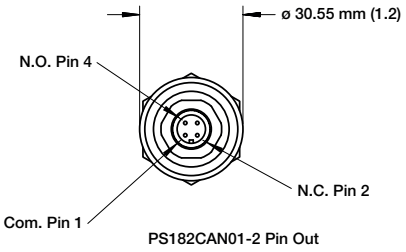

PS182CAN01-2 Pin Out

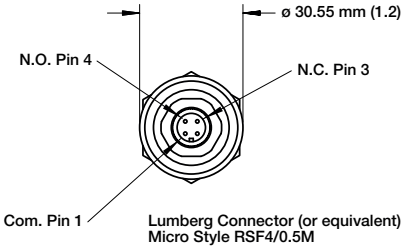

Lumberg Connector (or equivalent)
Micro Style RSF4/0.5M

SERIES PS180 PRESSURE SWITCH/ DIGITAL PRESSURE GAUGE

Performance Data	
Port Size/Thread Type	1/8 NPTF & ISO 228/1-G (BSPP)
Ambient Temperature Range °F (°C)	0 to 190 (-15 to 85)
Set Point Adjustment Ranges PSI (bar)	4–20 (0.28 to 1.38), 14–150 (0.97 to 10.34)
Maximum Pressure PSIG (bar)	300 (20.7)
Fluid	Air or Inert Gas
Maximum Cycle Rate per Minute	200
Hysteresis Adjustment	15%

Electrical Ratings	
Switch Contact Rating	4 Amp
Maximum Voltage	250 VAC (200 VDC)
Enclosure Rating	IP65

Materials in Contact with Fluid	
Connector Housing	Polyamide
Port	Zinc Plated Steel
Seals	NBR

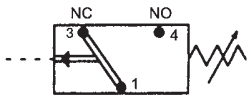

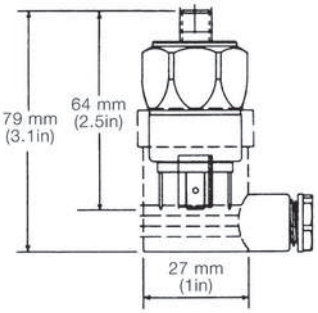

How to Order

Model Numbers

PS180CAN01 1/8 NPTF
PS180CAG01 1/8 ISO 228/1-G

Digital Pressure Gauge



Performance Data	
Port Size/Thread Type	1/8 (NPTF or ISO 7/1 Rc)
Ambient Temperature Range °F (°C)	32 to 122 (0 to 50)
Rated Pressure Range PSIG (bar)	0 to 145 (0 to 10)
Maximum Pressure PSIG (bar)	217.5 (15)
Fluid	Air or Inert Gas
Display (Unit Measurement)	PSI, bar, Mpa, kgf/cm²
LCD Display	7 Segment 3-1/2 Digit
Sampling Rate	2 times per second
Repeatability	< + 0.2% + 1 Digit

Electrical Ratings	
Battery	CR 2032 Lithium (Replaceable)
Battery Life	3 Year (display turned on 5 times per day)
Battery Power Saving Mode	Display turns off after 30 seconds
Enclosure Rating	IP65

Materials in Contact with Fluid	
Enclosure - Front Case	ABS
Enclosure - Back Case	Zinc
Seals	NBR

How to Order

Model Numbers

M699AG504650001 1/8 NPTF
M699AG504650002 1/8 ISO 7/1 Rc

SERIES 349 PRESSURE SWITCH

Performance Data		
	Without Protection	**With Protection**
Port Size/Thread Type	Pad Mounted	
Fluid	Air or Inert Gas	
Pressure Setting	0.2 to 6, 0.5 to 10, 0.5 to 16 bar	
Hysteresis	0.4 bar at the beginning of adjustment range 1 bar at the end of adjustment range	
Operating Temperature (°C)	-10 to 60	0 to 60
Max Voltage	250V - AC/DC	24 VDC
Current Breaking Capacity	5A - 250V resistive	2A - 24Vcc Resistive
Protection Degree	IP65	
Max Speed	60 cycles per minute	

Material in contact with fluid	
Body	High Performance Polymer(PA61/XT)/Aluminium for 16 bar version
Seals	NBR

How to Order

	0.2–6 bar	**0.5–10 bar**	**0.5–16 bar**
With Protection	34900028	34900031	34900034
Without Protection	34900027	34900030	34900033

Dimensional Drawings

Without Protection

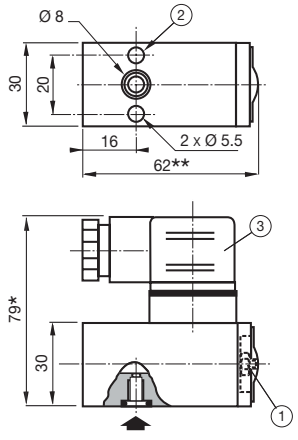

① Pressure set screw (spanner for hexagon nuts: 3mm)
② 2 holes Ø 5.5 for mounting
③ ISO4400 size 30 connector, 4 terminals, rotatable by 90°

* 15mm for connector clearance
** +2mm for 0.5 – 16 bar version

With Protection

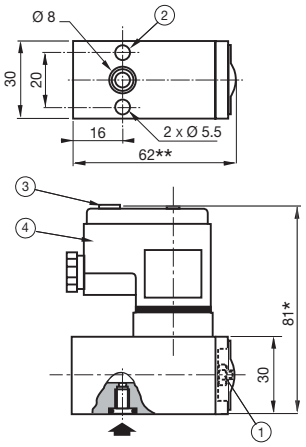

① Pressure set screw (spanner for hexagon nuts: 3mm)
② 2 holes Ø 5.5 for mounting
③ Identification label holder
④ ISO 4400 size 30 connector, 4 terminals, non-rotatable

* 15mm for connector clearance
** +2mm for 0.5 – 16 bar version

With Protection Electrical Diagram

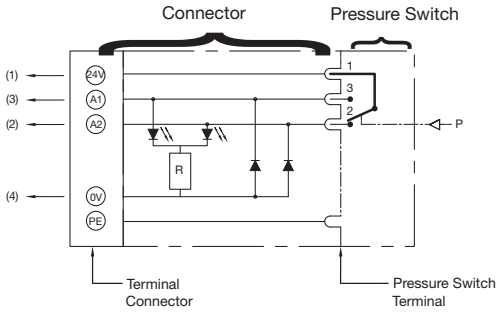

Status indicated by two diodes:

- at rest: contact 1-2 made: orange diode lights
- at work: contact 1-3 made: red diode lights

Terminal connection for 1.5mm² wire integrated interference blinking

Electrical Connection With and Without Protection

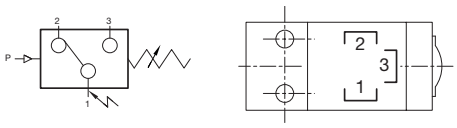

Electronic Liquid Level Indicator (for Lubricator)

Performance Data	
Actuation Point	25 mL (Nominal)
Switch Contact is open when fluid drops below 25 mL	
Connection	1/8-27 NPT External Thread



Electrical Ratings	
Switching Contact	SPST
Switch Type	50 Watt Reed Switch
Wire Size/Length	22 AWG/24 Inches (610mm)

Materials in Contact with Fluid	
Body	Brass
Float	Nylon

How to Order

Model Numbers

M699AG506837001

Repair Kits and Service Parts - Spare Parts Kits

		Description	Series	Kit Number
Bowls*		Polycarbonate Bowl & Bowl Guard - Includes NBR Bowl Seal for Filters, Filter-Regulators and Lubricators (Electronic Liquid Level Indicator only)	651	M651AU434133001
			652	M652AU440511001
			653	M653AU507439001
		Polycarbonate Bowl (No Bowl Guard) - Includes NBR Bowl Seal for Filters, Filter-Regulators and Lubricators (Electronic Liquid Level Indicator only)	651	M651AU434133009
		Polycarbonate Bowl & Bowl Guard - Includes NBR Bowl Seal for Lubricators	651	M651AU434133008
			652	M652AU440511008
			653	M653AU507439006
		Polycarbonate Bowl (No Bowl Guard) - Includes NBR Bowl Seal for Lubricators	651	M651AU434133010
		Metal bowl without sight gauge. Includes NBR Bowl Seal	651	M651AU434133002
			652	M652AU440511002
			653	M653AU507439002
		Metal bowl without sight gauge. Includes FKM Bowl Seal	651	M651AU434133011
			652	M652AU440511011
			653	M653AU507439005
		Metal bowl with polyamide sight gauge. Includes NBR Bowl Seal	651	M651AU434133003
			652	M652AU440511003
			653	M653AU507439003
		Metal bowl with polyamide sight gauge. Includes FKM Bowl Seal	651	M651AU434133013
			652	M652AU440511013
			653	M653AU507439011
		Metal bowl with borosilicate (glass) sight gauge. Includes NBR Bowl Seal	651	M651AU434133004
			652	M652AU440511004
			653	M653AU507439004
		Metal bowl with borosilicate (glass) sight gauge. Includes FKM Bowl Seal	651	M651AU434133015
			652	M652AU440511015
			653	M653AU507439013
High Pressure Bowls		Metal bowl without sight gauge. Includes NBR Bowl Seal.	653	M653AU507439002
		Metal bowl without sight gauge. Includes FKM Bowl Seal.	653	M653AU507439005
		Metal bowl with polyamide sight gauge. Includes NBR Bowl Seal.	653	M653AU507439003
		Metal bowl with polyamide sight gauge. Includes FKM Bowl Seal.	653	M653AU507439011
		Metal bowl with borosilicate (glass) sight gauge. Includes NBR Bowl Seal.	653	M653AU507439004
		Metal bowl with borosilicate (glass) sight gauge. Includes FKM Bowl Seal.	653	M653AU507439013
		Metal bowl without sight gauge. Includes NBR Bowl Seal.	653	M653AU523308001
		Metal bowl without sight gauge. Includes FKM Bowl Seal.	653	M653AU523308002

* For lubricator replacement metal bowls, please also order bowl plug p/n M699AQ440512001. This is not required if the Electronic Liquid Level Indicator is used.

Repair Kits and Service Parts - Spare Parts Kits

		Description	Series	Kit Number
Drains		Drain Plug Assembly. Provides an option to customers that do not want to use a bowl drain. Includes NBR Bowl Seal.	651 652 653	M699AQ440512001
		Semi-automatic/Manual Drain Assembly - with NBR seals. This normally open drain can be used as a manual drain or set to semi-automatic, which will drain the bowl upon a loss of system pressure. Drain material is plastic.	651 652 653	M699AQ440512002
		Semi-automatic/Manual Drain Assembly - with FKM seals. This normally open drain can be used as a manual drain or set to semi-automatic, which will drain the bowl upon a loss of system pressure. Drain material is plastic.	651 652 653	M699AQ440512007
		Manual Stainless Steel Drain Assembly - with NBR seals. Provides the user with an alternative to the plastic semi-automatic drain.	651 652 653	M699AQ440512003
		Manual Stainless Steel Drain Assembly - with FKM seals. Provides the user with an alternative to the plastic semi-automatic drain.	651 652 653	M699AQ440512008
		Automatic Drain Assembly - Normally Open - with NBR seals. This drain uses a float that initiates the bowl to drain when the liquid rises. In addition, all fluid will drain when the pressure drops below 22 PSI. Drain material is brass. This drain can also be operated manually.	651 652 653	M699AQ501862001
		Automatic Drain Assembly - Normally Closed - with NBR seals. When under pressure this drain uses a float that initiates the bowl to discharge when the liquid rises. When not under pressure the drain is closed. Drain material is brass. This drain can also be operated manually.	651 652 653	M699AQ501862002
		Pulse Drain - with NBR seals. The diaphragm in this drain pulses when there is a pressure differential such as a valve cycling or cylinder stroking downstream. This action flexes the diaphragm and allows the filter to discharge the entrapped water. This drain features an incorporated barbed fitting which fits 3/16 ID tubing for easy discharge of liquid and contaminant.	651 652 653	M699AQ440512015
Bowl & Drain Assembly		Bowl and Drain Assembly - Includes Polycarbonate Bowl/Guard and Semi-automatic Drain Assembly (NBR Seals).	651	M651AU514009001
			652	M652AU513311001
			653	M653AU514103001
Bowl Seal Kits		U-Cup Seal Kit (NBR Seals) Kit contains 10 U-Cup seals. This seal is used for all bowls	651	M651AH507403001
			652	M652AH507085001
			653	M653AH514106001
		U-Cup Seal Kit (FKM Seals) Kit contains 10 U-Cup seals. This seal is used for all bowls	651	M651AH507403002
			652	M652AH507085002
			653	M653AH514106002
Side Cover Kits		Blank Side cover Kit with no product identification.	651	M651AY524218001
			652	M652AY524218002
			653	M653AY524218003

Repair Kits and Service Parts - Spare Parts Kits

		Description	Series	Kit Number	Color
Filter Elements		5 Micron Particulate Filter Element	651	M651AE434063001	White
			652	M652AE433582001	
			653	M653AE439490001	
		25 Micron Particulate Filter Element	651	M651AE434063002	Yellow
			652	M652AE433582002	
			653	M653AE439490002	
		40 Micron Particulate Filter Element	651	M651AE434063003	Green
			652	M652AE433582003	
			653	M653AE439490003	
		0.3 Micron Coalescing Filter Element	651	M651AE525276001	Green
			652	EKF22D	
			653	EKF32D	
		0.3 Micron Coalescing Filter Element (High Flow)	653	M653AE516209001	
		0.01 Micron Coalescing Filter Element	651	M651AE525276003	Red
			652	EKF22E	
			653	EKF32E	
		0.01 Micron Coalescing Filter Element (High Flow)	653	M653AE516209003	
		0.3 Micron Coalescing Filter Element - with 3 Micron pre-filter	651	M651AE525276002	Green
			652	EKF22DD	
			653	EKF32DD	
		0.3 Micron Coalescing Filter Element - with 3 Micron pre-filter (High Flow)	653	M653AE516209002	
		0.01 Micron Coalescing Filter Element - with 3 Micron pre-filter	651	M651AE525276004	Red
			652	EKF22ED	
			653	EKF32ED	
		0.01 Micron Coalescing Filter Element - with 3 Micron pre-filter (High Flow)	653	M653AE516209004	
		Adsorber (Activated Carbon) Filter	651	EKF12F	White/ Clear
			652	EKF22F	
			653	EKF32F	
		Adsorber (Activated Carbon) Filter (High Flow)	653	M653AE516209005	

Repair Kits and Service Parts - Air Prep Assembly and Mounting Kits

	Description			Series	Kit Number
	Body-to-Body Assembly Clamps (Includes NBR O-Ring). Clamp material is aluminum.			651	P651AT504958001
				652	P652AT502466001
				653	P653AT507291001
	Body-to-Body Assembly Clamps (Include FKM O-Ring). Clamp material is aluminum.			651	P651AT504958003
				652	P652AT502466003
				653	P653AT507291003
	Body-to-Body Assembly Clamps (Includes NBR O-Ring) and Wall/Panel Bracket Kit includes one bracket and two screws for attaching bracket to body clamp. Clamp material is aluminum.			651	P651AT535310001
				652	P652AT535311001
				653	P653AT535312001
	Body-to-Body Assembly Clamps (Includes FKM O-Ring) and Wall/Panel Bracket Kit includes one bracket and two screws for attaching bracket to body clamp. Clamp material is aluminum.			651	P651AT535310002
				652	P652AT535311002
				653	P653AT535312002
	End Plate Kit: Includes two end plates and Body-to-Body assembly clamps & O-Ring. End Plate material is aluminum.	NBR O-Ring	1/4 NPTF	651	T651AT504959001
			1/2 NPTF	652	T652AT502468001
			1 NPTF	653	T653AT507292001
			1-1/4 NPTF	653	T653AT507292019
			1/4 ISO228/1-G	651	T651AT504959002
			1/2 ISO228/1-G	652	T652AT502468002
			1 ISO228/1-G	653	T653AT507292002
			1-1/4 ISO228/1-G	653	T653AT507292020
			1/4 ISO 7/1 Rc	651	T651AT504959003
			1/2 ISO 7/1 Rc	652	T652AT502468003
			1 ISO 7/1 Rc	653	T653AT507292003
			1-1/4 ISO 7/1 Rc	653	T653AT507292021
		FKM O-Ring	1/4 NPTF	651	T651AT504959007
			1/2 NPTF	652	T652AT502468007
			1 NPTF	653	T653AT507292007
			1-1/4 NPTF	653	T653AT507292025
			1/4 ISO228/1-G	651	T651AT504959008
			1/2 ISO228/1-G	652	T652AT502468008
			1 ISO228/1-G	653	T653AT507292008
			1-1/4 ISO228/1-G	653	T653AT507292026
			1/4 ISO 7/1 Rc	651	T651AT504959009
			1/2 ISO 7/1 Rc	652	T652AT502468009
			1 ISO 7/1 Rc	653	T653AT507292009
			1-1/4 ISO 7/1 Rc	653	T653AT507292027
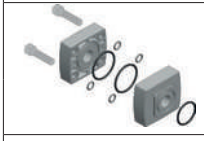	Panel Adapter P1 + P2 to mount 651 or 652 product on both side of the panel. Certified NEMA 1,4; IP66.	FKM O-Ring	not threaded	651	T651AT522204001
				652	T652AT519954001
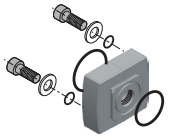	P2 Panel Adapter to connect P1 inlet to 651 or 652 product. Certified NEMA 1,4; IP66.	FKM O-Ring	1/4 NPTF	651	T651AT522204002
			1/2 NPTF	652	T652AT519954002
			1/4 ISO228/1-G	651	T651AT522204003
			1/2 ISO228/1-G	652	T652AT519954003

Repair Kits and Service Parts - Air Prep Assembly and Mounting Kits

	Description			Series	Kit Number
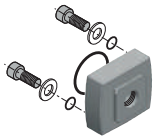	P1 Panel Adapter to connect P2 outlet to 651 or 652 product. Certified NEMA 1,4; IP66.	FKM O-Ring	1/4 NPTF	**651**	T651AT522204004
			1/2 NPTF	**652**	T652AT519954004
			1/4 ISO228/1-G	**651**	T651AT522204005
			1/2 ISO228/1-G	**652**	T652AT519954005
	Wall/Panel Bracket Kit includes one bracket and two screws for attaching bracket to body clamp. Two brackets are required for mounting three or more products. One bracket is suitable for mounting two products. Material is aluminum.			**651** **652** **653**	P699AT502467001
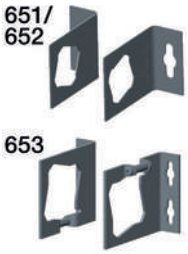	Side Mounting Brackets (Includes two brackets): Designed for mounting single products to wall or panel, but is capable of handling up to 3 stations. Material is stainless steel.			**651**	P651AT503860001
				652	P652AT503860002
				653	P653AT503860003
	Panel Nut: Used for Regulators and Filter-Regulators where adjustment knob is fed through a panel and the panel nut is then used to secure the product to the panel. Material is polyamide.			**651**	P651AT513928001
				652	P652AT513177001
	Panel Nut & Bracket: The panel nut and bracket are used to mount a Regulator or Filter-Regulator to a wall or panel. Materials are stainless steel and polyamide.			**651**	P651AT503861001
				652	P652AT503861002
	Series Transition Kit: Includes two body clamps, transition plate and o-rings.	NBR O-Ring		**651 to 652**	T651AT519193001
				652 to 653	T652AT519194001
		FKM O-Ring		**651 to 652**	T651AT519193002
				652 to 653	T652AT519194002
	Series Transition Kit: Includes two body clamps, transition plate and o-rings.	NBR O-Ring		**652 to 651**	T652AT519193003
				653 to 652	T653AT519194003
		FKM O-Ring		**652 to 651**	T652AT519193004
				653 to 652	T653AT519194004
	651 Adapter Kit for L1 Valve Series			**651**	M651AY528751001
	652 Adapter Kit for L2 Valve Series			**652**	M652AY528750001

Repair Kits and Service Parts - Spare Parts Kits

		Description	Series	Kit Number
No Gauge		No Gauge Cover Kit - NBR Seal. Includes gauge cover, screw and O-Ring	**651/652/653**	M699AG503396001
		No Gauge Cover Kit - FKM Seal. Includes gauge cover, screw and O-Ring	**651/652/653**	M699AG503396002
Low Profile Gauges*		Low Profile Gauge - Series 651/652/653: 0–90 PSI Scale with NBR seals	**651/652/653**	M699AG438047005
		Low Profile Gauge - Series 651/652/653: 0–90 PSI Scale with FKM seals	**651/652/653**	M699AG438047017
		Low Profile Gauge - Series 651/652/653: 0–175 PSI Scale with NBR seals	**651/652/653**	M699AG438047004
		Low Profile Gauge - Series 651/652/653: 0–175 PSI Scale with FKM seals	**651/652/653**	M699AG438047016
		Low Profile Gauge - Series 651/652/653: 0–375 PSI Scale with NBR seals	**651/652/653**	M699AG438047006
		Low Profile Gauge - Series 651/652/653: 0–375 PSI Scale with FKM seals	**651/652/653**	M699AG438047018
		Low Profile Gauge - Series 651/652/653: 0–6 bar Scale with NBR seals	**651/652/653**	M699AG438047002
		Low Profile Gauge - Series 651/652/653: 0–6 bar Scale with FKM seals	**651/652/653**	M699AG438047014
		Low Profile Gauge - Series 651/652/653: 0–12 bar Scale with NBR seals	**651/652/653**	M699AG438047001
		Low Profile Gauge - Series 651/652/653: 0–12 bar Scale with FKM seals	**651/652/653**	M699AG438047013
		Low Profile Gauge - Series 653 and SOV for 651/652/653: 0–25 bar Scale with NBR seals	**651/652/653**	M699AG438047003
		Low Profile Gauge - Series 653 and SOV for 651/652/653: 0–25 bar Scale with FKM seals	**651/652/653**	M699AG438047015
		Pressure Range Indicators (Red/Green) for Low Profile Gauges. Desired range can be easily set in the field. This kit allows customers to add the pressure range indicator to existing low profile gauges in the field.	**651/652/653**	M699AG500179001
		Low Profile Gauge with Pressure Range Indicator - Series 651/652/653: 0–90 PSI Scale with NBR seals	**651/652/653**	M699AG438047011
		Low Profile Gauge with Pressure Range Indicator - Series 651/652/653: 0–175 PSI Scale with NBR seals	**651/652/653**	M699AG438047010
		Low Profile Gauge with Pressure Range Indicator - Series 651/652/653: 0–375 PSI Scale with NBR seals	**651/652/653**	M699AG438047012
		Low Profile Gauge with Pressure Range Indicator - Series 651/652/653: 0–6 bar Scale with NBR seals	**651/652/653**	M699AG438047008
		Low Profile Gauge with Pressure Range Indicator - Series 651/652/653: 0–12 bar Scale with NBR seals	**651/652/653**	M699AG438047007
		Low Profile Gauge with Pressure Range Indicator - Series 653 and SOV for 651/652/653: 0–25 bar Scale with NBR seals	**651/652/653**	M699AG438047009

* Each of the Low Profile and Round Gauges are dual scale; consult factory for further information. The scale that is listed in the description has the units located near the outside of the scale. The other units would be on the inside.

Repair Kits and Service Parts - Spare Parts Kits

		Description	Series	Kit Number
Digital Gauge		Digital Pressure Gauge - Series 651/652/653: 0–145 PSI Scale (User can change units; bar, MPa, Kgf/cm²) 1/8" NPTF	**651/652/653**	M699AG504650001
		Digital Pressure Gauge - Series 651/652/653: 0–145 PSI Scale (User can change units; bar, MPa, Kgf/cm²) 1/8" ISO 7/1 Rc	**651/652/653**	M699AG504650002
Round Gauges*		Round Gauge - 0–60 PSI Series 1/8 NPTF and 1.5" Face Diameter	**651/652/653**	214-116
		Round Gauge - 0–160 PSI Series 1/8 NPTF and 1.5" Face Diameter	**651/652/653**	214-103
		Round Gauge - 0–300 PSI 1/8 NPTF and 1.5" Face Diameter	**651/652/653**	214-118
		Round Gauge - 0–60 PSI 1/8 ISO 7/1 Rc and 1.5" Face Diameter	**651/652/653**	RA060
		Round Gauge - 0–160 PSI 1/8 ISO 7/1 Rc and 1.5" Face Diameter	**651/652/653**	214-153
		Round Gauge - 0–300 PSI 1/8 ISO 7/1 Rc and 1.5" Face Diameter	**651/652/653**	RA300A
		Round Gauge - 0–4 bar 1/8 ISO 7/1 Rc and 40mm Face Diameter (Europe)	**651/652/653**	34300015
		Round Gauge - 0–10 bar 1/8 ISO 7/1 Rc and 40mm Face Diameter (Europe)	**651/652/653**	34300014
		Round Gauge - 0–12 bar 1/8 ISO 7/1 Rc and 40mm Face Diameter (Europe)	**651/652/653**	34300041
		Round Gauge - 0–25 bar 1/8 ISO 7/1 Rc and 50mm Face Diameter (Europe)	**651/652/653**	34200063
		Round Gauge - 0–4 bar 1/8 ISO 7/1 Rc and 50mm Face Diameter (Europe)	**651/652/653**	34200061
		Round Gauge - 0–12 bar 1/8 ISO 7/1 Rc and 50mm Face Diameter (Europe)	**651/652/653**	34200062
		Round Gauge - 0–16 bar 1/8 ISO 7/1 Rc and 50mm Face Diameter (Europe)	**651/652/653**	34200997
		Stainless Steel Round Gauge - 0–12 bar 1/8 ISO 7/1 Rc and 50 mm Face Diameter	**651/652/653**	34303242
Port Plates		Gauge Port Plate Assembly - 1/8 NPTF	**651/652/653**	M699AG440510001
		Gauge Port Plate Assembly - 1/8 ISO 7/1 Rc	**651/652/653**	M699AG440510002
Pressure Switch/ Sensor		DPS280 Pressure Switch/Sensor - NPN M8 with Cable 1/8 ISO 7/1 Rc	**651/652/653**	DPS280NRQ8
		DPS280 Pressure Switch/Sensor - PNP M8 with Cable 1/8 ISO 7/1 Rc	**651/652/653**	DPS280PRQ8
		DPS280 Pressure Switch/Sensor - NPN M8 with Cable 1/8 NPTF	**651/652/653**	DPS280NNQ8
		DPS280 Pressure Switch/Sensor - PNP M8 with Cable 1/8 NPTF	**651/652/653**	DPS280PNQ8
	 Note: Series PS182 image	Pressure Switch: 1/8 NPTF, 20–130 PSI (1.4 to 9 bar) range, Brass/NBR 3 PIN M12 connection (12mm); IP65 (Pin out is compatible with G3 Fieldbus Digital I/O)	**651/652/653**	PS182CAN01-2
		Pressure Switch: 1/8 NPTF, 20–130 PSI (1.4 to 9 bar) range, Brass/NBR 3 PIN M12 connection (12mm); IP65	**651/652/653**	PS182CAN01
		Pressure Switch: 1/8 BSPP, 20–130 PSI (1.4 to 9 bar) range, Brass/NBR 3 PIN M12 connection (12mm); IP65	**651/652/653**	PS182CAG01
		Pressure Switch: 1/8 NPTF, 14–150 PSI (1 to 10 bar) range, Zinc Plated Steel/ NBR Polyamide Connector Material, 4 PIN DIN Connector; IP65	**651/652/653**	PS180CAN01
	–	Connector/Cord-set for PS182 - 90° Elbow: 5 Meter cable	**651/652/653**	PS182-5-90
		Connector/Cord-set for PS182 - Straight: 5 Meter cable	**651/652/653**	PS182-5-ST

* Each of the Low Profile and Round Gauges are dual scale; consult factory for further information. The scale that is listed in the description has the units located near the outside of the scale. The other units would be on the inside.

Note: For all pressure switches & round gauges that are added to series products in the field, a port plate is required. The port plate can be added at the time of order entry or as a kit.

Repair Kits and Service Parts - Spare Parts Kits

		Description	Series	Kit Number
Lubricator Repair Kits		Lubricator Dome Repair Kit - NBR seals. Includes dome cover, screw and O-Rings.	**651 652 653**	M699AY506842001
		Lubricator Dome Repair Kit - FKM seals. Includes dome cover, screw and O-Rings.	**651 652 653**	M699AY506842002
		Lubricator Level Switch assembly kit. Includes level switch, stainless steel retainer ring, O-Ring and bushing.	**651 652 653**	M699AG506837001
		Lubricator Bowl Plug assembly: Includes Lubricator bowl plug, stainless steel retainer ring and NBR O-Ring.	**651 652 653**	M699AQ440512001
Filter Kits		Particulate Filter Repair Kit - includes the filter retainer, head baffle, lower end cap and bowl baffle.	**651**	M651AY570170001
			652	M652AY506833001
			653	M653AY514105001
		Differential Pressure Pop-up Indicator (NBR Seals) This is used for the Coalescing Filters to provide visual indication when the filter element needs to be replaced.	**651 652 653**	M699AG439851001
		Differential Pressure Pop-up Indicator (FKM Seals) This is used for the Coalescing Filters to provide visual indication when the filter element needs to be replaced.	**651 652 653**	M699AG439851004
		DPI Plug (NBR Seals) This is used to plug the top port on the filter when a Differential Pressure Indicator is not used.	**651 652 653**	M699AG439851002
		DPI Plug (FKM Seals) This is used to plug the top port on the filter when a Differential Pressure Indicator is not used.	**651 652 653**	M699AG439851005

Repair Kits and Service Parts - Spare Parts Kits

		Description	Series	Kit Number
Regulator & Filter Regulator Kits		Adjusting Screw Repair Kit - includes adjusting screw, nut, washer and screw	**651**	M651AY514012001
			652	M652AY506952001
			653	M653AY514104001
		Key Lockable Adjusting Screw Repair Kit - includes adjusting screw, adjusting nut, flat washer and screw	**651**	M651AY514012002
			652	M652AY506952002
			653	M653AY514104002
		Tamper Resistant Repair Kit - includes adjusting screw, adjusting nut, flat washers and screws	**651**	M651AY514012003
			652	M652AY506952003
			653	M653AY514104003
		Replacement Knob for Regulator or Fillter/Regulators	**651**	M651AY519042001
			652	M652AY519042003
			653	M653AY519042005
		Replacement Knob for the tamper resistant or key lockable Regulator or Filter/Regulators	**651**	M651AY519042002
			652	M652AY519042004
			653	M653AY519042006
		Poppet Repair Kit (NBR Seals): Includes poppet, stem & seals	**651**	M651AY507175001
			652	M652AY506863001
			653	M653AY507270001
		Poppet Repair Kit (FKM Seals): Includes poppet, stem & seals	**651**	M651AY507175002
			652	M652AY506863002
			653	M653AY507270002
		Diaphragm Assembly Repair Kit (Pilot Operated Regulator NBR Seals)	**652**	M652AH435268001
		Diaphragm Assembly Repair Kit (Pilot Operated Regulator FKM Seals)	**652**	M652AH435268002
		Diaphragm Assembly Repair Kit (Relieving Regulator NBR Seals)	**651**	M651AH504954001
			652	M652AH434213001
			653	M653AH502120001
		Diaphragm Assembly Repair Kit (Relieving Regulator FKM Seals)	**651**	M651AH504954002
			652	M652AH434213002
			653	M653AH502120002
		Diaphragm Assembly Repair Kit (Non-relieving Regulator NBR Seals)	**651**	M651AH504954003
			652	M652AH434213003
			653	M653AH502120003
		Diaphragm Assembly Repair Kit (Non-relieving Regulator - FKM Seals)	**651**	M651AH504954004
			652	M652AH434213004
			653	M653AH502120004
		Main Spring (45 PSIG/3 bar)	**651**	M651AY514010001
			652	M652AY513313001
			653	M653AY516711001
		Main Spring (60 PSI/4 bar)	**651**	M651AY504691001
			652	M652AY438708001
			653	M653AY516710001
		Main Spring (125 PSI/8 bar)	**651**	M651AY504692001
			652	M652AY438709001
			653	M653AY516709001
		Main Spring (145 PSI/10 bar)	**651**	M651AY514011001
			652	M652AY513314001
			653	M653AY516708001

Repair Kits and Service Parts - Spare Parts Kits

		Description	Series	Part/Kit Number
3/2 Slow Start/ Quick Exhaust Valve Kits		Horizontal Solenoid Operator (190) - with Manual Override	**651 652**	19090017
		Horizontal Solenoid Operator (190) - without Manual Override	**651 652**	19090005
		24 VDC coil with 3 Pin M12 Connection, for Horizontal Solenoid Operator	**651 652**	43005525
		24 VDC coil with DIN Spade connection for Horizontal Solenoid Operator	**651 652**	43004473
		120 VAC coil with DIN Spade connection for Horizontal Solenoid Operator	**651 652**	43004471
		24 VAC coil with DIN Spade connection for Horizontal Solenoid Operator	**651 652**	43004469
		240 VAC coil with DIN Spade connection for Horizontal Solenoid Operator	**651 652**	43004472
		DIN Connector, without LED - Horizontal Solenoid Operator	**651 652**	88122602
		DIN Connector, with LED, for 24 VAC/DC coil - Horizontal Solenoid Operator	**651 652**	88122603
		DIN Connector, with LED, for 120 VAC coil - Horizontal Solenoid Operator	**651 652**	88122605
		DIN Connector, with LED, for 240 VAC coil - Horizontal Solenoid Operator	**651 652**	88122608
		Vertical Solenoid Operator (189) - without Manual Override	**651 652**	18990007
		24 VDC coil with 3 Pin M12 Connection, for Vertical Solenoid Operator	**651 652**	43005523
		24 VDC coil with DIN Spade connection for Vertical Solenoid Operator	**651 652**	43004166
		120 VAC coil with DIN Spade connection for Vertical Solenoid Operator	**651 652**	43004419
		24 VAC coil with DIN Spade connection for Vertical Solenoid Operator	**651 652**	43004416
		240 VAC coil with DIN Spade connection for Vertical Solenoid Operator	**651 652**	43004422
		DIN Connector, without LED - Vertical Solenoid Operator	**651 652**	88122404
		DIN Connector, with LED, for 24 VAC/DC coil - Vertical Solenoid Operator	**651 652**	88122405
		DIN Connector, with LED, for 120 VAC coil - Vertical Solenoid Operator	**651 652**	88122407
		DIN Connector, with LED, for 240 VAC coil - Vertical Solenoid Operator	**651 652**	88122410

Repair Kits and Service Parts - Spare Parts Kits

		Description	Series	Part/Kit Number
3/2 Slow Start/ Quick Exhaust Valve Kits		Horizontal Solenoid Operator (192) - with Manual Override	**653**	19291012
		Horizontal Solenoid Operator (192) - without Manual Override	**653**	19291010
		24 VDC coil with 3 Pin M12 Connection, for Horizontal Solenoid Operator	**653**	43005664
		24 VDC coil with DIN Spade connection for Horizontal Solenoid Operator	**653**	43005642
		120 VAC coil with DIN Spade connection for Horizontal Solenoid Operator	**653**	43005617
		24 VAC coil with DIN Spade connection for Horizontal Solenoid Operator	**653**	43005604
		240 VAC coil with DIN Spade connection for Horizontal Solenoid Operator	**653**	43005627
		DIN Connector, without LED - Horizontal Solenoid Operator	**653**	88122602
		DIN Connector, with LED, for 24 VAC/DC coil - Horizontal Solenoid Operator	**653**	88122603
		DIN Connector, with LED, for 120 VAC coil - Horizontal Solenoid Operator	**653**	88122605
		DIN Connector, with LED, for 240 VAC coil - Horizontal Solenoid Operator	**653**	88122608
Jumper Plate Kit		Jumper Plate Kit: For Air Operated Internally Piloted 3/2 Slow Start/Quick Exhaust Valve	**651 652 653**	M699AY513316001
Pilot Port Plate	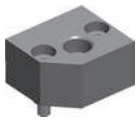	Pilot Port Plate: For Air Operated Externally Piloted 3/2 Slow Start/Quick Exhaust Valve	**651 652 653**	M699AY513318001
		Pilot Port Plate: For Air Operated Externally Piloted 3/2 Slow Start/Quick Exhaust Valve, 1/8 NPT	**651 652 653**	M699AY513318002

Accessories

		Description	Series	Kit Number
Scissor Lock		Scissor Lock for Shut Off Isolation Valve & Lockout Valve	**651 652 653**	VB-1
Mufflers/ Silencers		Metal Muffler - 1/4 NPTF (Shut Off Isolation Valves & Slow Start/Quick Exhaust Valves)	**651 652**	M2MN
		Metal Muffler - 3/8 NPTF (Shut Off Isolation Valves & Slow Start/Quick Exhaust Valves)	**653**	M3MN
		Metal Muffler - 1/2 NPTF (Slow Start/Quick Exhaust & Lockouts)	**651 652**	M4MN
		Metal Muffler - 1 NPTF (Slow Start/Quick Exhaust & Lockouts)	**653**	M6MN
		Polyethylene Muffler - 1/4 NPTF (Shut Off Isolation Valves & Slow Start/Quick Exhaust)	**651 652**	E2MN
		Polyethylene Muffler - 3/8 NPTF (Shut Off Isolation Valves)	**653**	E3MN
		Polyethylene Muffler - 1/2 NPTF (Slow Start/Quick Exhaust & Lockouts)	**651 652**	E4MN
Key Lock		Key lock for Regulator and Filter-Regulator supplied seperately with 2 keys	**651 652 653**	M699AY438663001

The right products and engineering expertise to enable you to optimize your air preparation systems

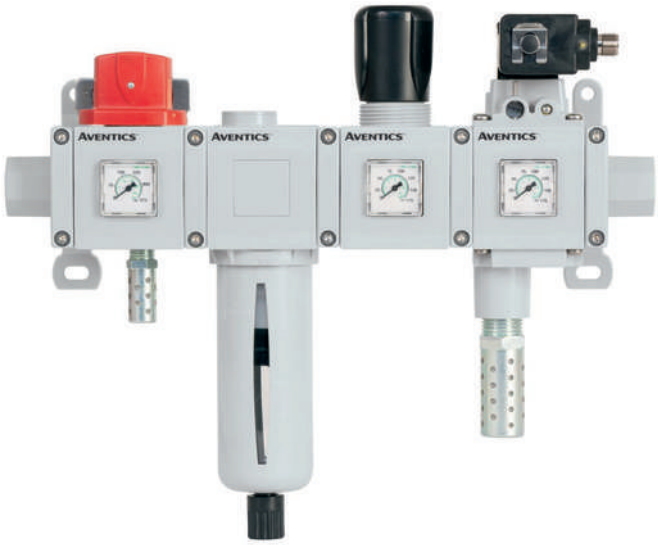

AVENTICS™

Where flow control meets pneumatics to create fluid automation solutions that maximize efficiencies, optimize applications, and enable customers to fulfill their true potential.

Our extensive product lines include a broad range of solenoid valves, pressure operated valves, pneumatic valves, valve systems, cylinders, air preparation products and accessories.

Visit us: Emerson.com
Your local contact: Emerson.com/contactus

Emerson.com
Facebook.com/EmersonAutomationSolutions
LinkedIn.com/company/Emerson-Automation-Solutions
Twitter.com/EMR_Automation

The Emerson logo is a trademark and service mark of Emerson Electric Co. Brand logotype are registered trademarks of one of the Emerson family of companies. All other marks are the property of their respective owners. © 2020 Emerson Electric Co. All rights reserved. BR000011ENUS-17-10-2023 / Printed in the U.S.A.

EMERSON™

CONSIDER IT SOLVED™