PRA/882000/M/EX, IVAC Clean Line cylinder Magnetic piston, double acting

- ø 32 ... 100 mm
- Complete functional unit with LED display
- These cylinders are applicable in zones 2 (gas) & 22 (dust) , ATEX Cat. II 3G and 3D
- Central electrical connector, polarity-safe
- Integrated 5/2 or 5/3 valve
- Additional output ports (2 & 4)
- Integrated flow regulator for speed control
- Integrated reed or solid state switches

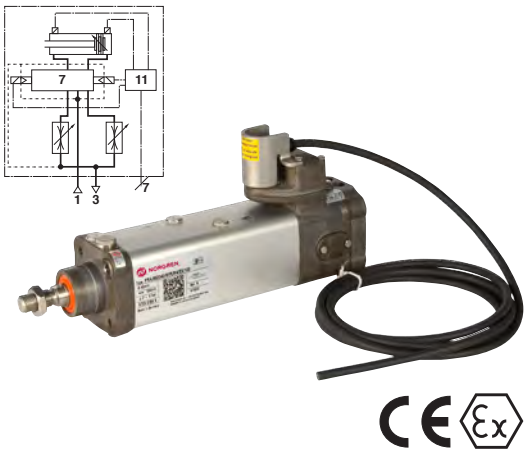

Technical features

Medium:
Compressed air, filtered, lubricated or non-lubricated
Particles size: Class 7, ISO 8573 – 1 (dated 2001)
Humidity and water content: Air supply must be dry. Corresponding of the application and working conditions the air must be dry enough to avoid condensate. The pressure dewpoint must be minimum 15°C under the application and working conditions. Oil: Class 4, ISO 8573 – 1 (dated 2001)

Standard:
Based on ISO 15552 (length , mounting pitch and thread dimensions according to ISO 15552. Some outside dimensions different to ISO 15552)

Operation:
Double acting, magnetic piston, adjustable cushioning

Operating pressure:
2 ... 8 bar (29 ... 116 psi)

Port size:
G1/8, G1/4, G3/8

Cylinder diameters:
32, 40, 50, 63, 80, 100 mm

Standard strokes:
See below

Non-standard strokes:
Available (25 ... 1000 mm)

Ambient temperature:
-5 ... +50°C (+23 ... +122°F) max.

Operating temperature:
-5 ... +70°C max. (+23 ... +158°F)

ATEX-Protection:
Details see page 4

Supply voltage:
24 V d.c.

Multipole connection:
M12 x 1 connector 90°, 8 pin, 5 m Cable

Power consumption:
1 W max

Rating:
100 % E.D.

Protection class:
IP67
For outdoor installation please protect all connections against the penetration of moisture!

Materials:
Profile barrel: anodised aluminium,
End covers: pressure diecast anodised aluminium
Piston rod: stainless steel, see page 3
Piston rod seals: PUR
Piston seals: PUR
O-rings: NBR

Technical data

Cylinder ø (mm)	32	40	50	63	80	100
Port size	G1/8	G1/8	G1/8	G1/4	G1/4	G3/8
Piston rod ø (mm)	12	16	20	20	25	25
Piston rod thread	M10 x 1,25	M12 x 1,25	M16 x 1,5	M16 x 1,5	M20 x 1,5	M20 x 1,5
Cushion length (mm)	11	14	14	19	19	26
Theoretical thrusts at 6 bar outstroke (N)	482	754	1178	1870	3016	4710
Theoretical thrusts at 6 bar instroke (N)	414	633	990	1680	2722	4416
Air consumption at 6 bar outstroke (l/cm)	0,056	0,088	0,137	0,218	0,35	0,55
Air consumption at 6 bar instroke (l/cm)	0,05	0,076	0,117	0,198	0,324	0,514

Standard strokes

Cylinder ø (mm)	Stroke length (mm) 25	50	80	100	125	160	200	250	320	400	500
32	•	•	•	•	•	•	•	•	•	•	•
40	•	•	•	•	•	•	•	•	•	•	•
50	•	•	•	•	•	•	•	•	•	•	•
63	•	•	•	•	•	•	•	•	•	•	•
80	•	•	•	•	•	•	•	•	•	•	•
100	•	•	•	•	•	•	•	•	•	•	•

Our policy is one of continued research and development. We therefore reserve the right to amend, without notice, the specifications given in this document. (2013 - 1237h) © 2024 Norgren Ltd.

Explosion protection according to EU-directive 2014/34/EU

EN ISO 80079 Non-electrical equipment for potentally explosive atmospheres

Range of application		All range of application other than mines		
Equipment group		II		
Potentially explosive atmosphere		Mixture of air and gases, vapours, mists G (gas)		
(compustible materials)		Dust/air - mixture D (dust)		
Probability risk for a potentially explosive atmosphere		Continuous or long-term or frequent	Occasional	Rarely and briefly
Equipment categories		1	2	3
Equipment safety		very high	high	normal
Gas	Equipment-identification Ex...	Ex II 1G	Ex II 2G	Ex II 3G
	ATEX-zone	Zone 0	Zone 1	Zone 2
Dust	Equipment-identification Ex...	Ex II 1D	Ex II 2D	Ex II 3D
	ATEX-zone	Zone 20	Zone 21	Zone 22

Equipment identification for Norgren pneumatic cylinder: (Example for standard cylinder)

II 2G Ex h IIC T4 Gb
II 2D Ex h IIIC T120°C Db

Equipment group:	II	All application other than mines
Equipment categorie:	2	High level of equipment safety
Usability for zones:	G and D	Gas and dust
Explosions groups	IIC and IIIC	Max. ignitability gas- and dust groups
Temperature class for gas:	T4	Max. surface temperature 135°C
Temperature data for dust:	120°C	Max. surface temperature
Equipment Protection Level (EPL)	Gb and Db	Gas and dust, save by normal operation and expected equipment fault

Our policy is one of continued research and development. We therefore reserve the right to amend, without notice, the specifications given in this document. (2013 - 1237h) © 2024 Norgren Ltd.

Cylinder variants

Symbol	R	S	C	D	E	V	Model with magnetic piston	Description	Dimensions Page
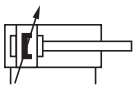	•	•	•	•	•	•	PRA/882000/MI	Standard cylinder	8
	•	•	•	•	•	•	PRA/882000/W2	Cylinder with special wiper/seal (suitable for appl. with cement, plaster (stucco), arizona sand, hoar-frost or ice)	8
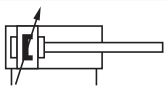	•	•	•	•	•	•	PRA/882000/MU	Cylinder with extended piston rod	8
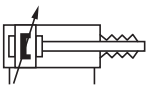	•	•	•	•	•	•	PRA/882000/MG	Cylinder with piston rod bellow	9

For the cylinder models style C, D, E, S and V see options selector

Option selector

P★A/882★★★/★★★/M★/★X/★★★★

Piston rod material	Substitute
Stainless steel (martensitic); Standard wiper seal	R
Stainless steel (austenitic); Standard wiper seal	S
Hard chromium plated; Standard wiper seal	C
Stainless steel (austenitic); hard chromium plated; Standard wiper seal	D
Stainless steel (austenitic); Smooth wiper seal	V
Stainless steel (austenitic); hard chromium plated; Smooth wiper seal	E
Cylinder ø (mm)	**Substitute**
032, 040, 050, 063, 080, 100	
Variants (magnetic piston)	**Substitute**
Standard	MI
Piston rod bellow	MG
Special wiper seal	W2
Extended piston rod,	MU
P*A/882***/MU*/M*/EX/****/*** → Extension (mm)	

Strokes (mm)	
1000 max.	
Pilot control	**Substitute**
Pilot valve & magnet coil	E
Without *1)	I
Switch variants	**Substitute**
Without	0
Adjustable Reed switch position *2)	3
Adjustable solid state switch position	4
Valve function *3)	**Substitute**
5/2 way solenoid/spring, cylinder instroke without current 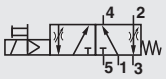	R
5/2 way solenoid/spring, cylinder outstroke without current 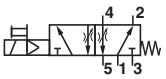	E
5/2 way solenoid operated, solenoid return, bistable 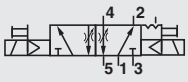	B
5/3 way solenoid operated, solenoid return, all ports blocked (APB) 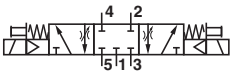	A
5/3 way solenoid operated, solenoid return, centre open exhaust (COE) 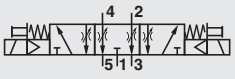	C

Caution!
Please note the information on the next page!

*1) Without pilot control
Operation of the cylinder is only possible
with an additional pilot control.
A separate specification is available on request

*2) For ø 40 ... 100 mm only

*3) External pilot pressure on request

Our policy is one of continued research and development. We therefore reserve the right to amend, without notice, the specifications given in this document. (2013 - 1237h) © 2024 Norgren Ltd.

ATTENTION:

A cylinder is a module consisting of several parts:
1. Cylinder with pilot control module (VCM)
2. Accessories: sensors (optional)

- Each part is separate classified according ATEX for use in potentially explosive atmospheres.
- The resulting range of approved applications for the module corresponds to that of the individual part assigned to the lowest category.
- The result concerns the device category, potentially explosive atmosphere G or D, max. surface temperature and explosion classification if applicable.

Cylinder variants *4)	Magnetically switches	Resulting ATEX-Data *1)	
MI W2 MU MG	Without Reed: M/50/LXU/5V Solid state: M/50/EXP/5V	Zone 2 and 22	T amb. -5 ... +50°C max

*1) The permissible ATEX zones and temperatures may changed when a different pilot contol with separate specification is used (substitute .../IX/...).

*4) ATEX-marking only of the mechanical cylinder variants:

MI, W2, MU, MG (Ex) II 3G Ex h IIC T4 Gc (with pilot control)
II 3D Ex h IIIC T120°C Dc

MI, W2, MU (Ex) II 2G Ex h IIC T4 Gb (without magnetically switches, without pilot control)
II 2D Ex h IIIC T120°C Db (Option selector: .../M0/IX/...)

ATEX-marking of electric valve control modul (VCM):
II 3G Ex ec IIC T4 Gc X
II 3D Ex tc IIIC T120°C Dc X
ATEX-marking of magnetically operated switches see page 14 and 15

Wiring diagram for M12 male connector

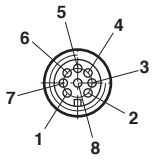

Valves		Wiring diagram for connector cable M/P74582
Pin 1	Not used	White
Pin 2	Solenoid 2 (instroke)	Brown
Pin 3	0 V	Green
Pin 4	Solenoid 1 (outstroke)	Yellow

Switches		Wiring diagram for connector cable M/P74582
Pin 5	+ 24 V d.c.	Grey
Pin 6	Switch 2 (rear end cover)	Pink
Pin 7	0 V	Blue
Pin 8	Switch 1 (front end cover)	Red

Our policy is one of continued research and development. We therefore reserve the right to amend, without notice, the specifications given in this document. (2013 - 1237h) © 2024 Norgren Ltd.

Reduced Installation Time & Cost

To connect the IVAC you simply run a single ring main to provide an air supply to each unit. There is no mounting of valve islands to the machine framework or inside a cabinet and there is no pipework to run arround the machine to connect each valve to each actuator.

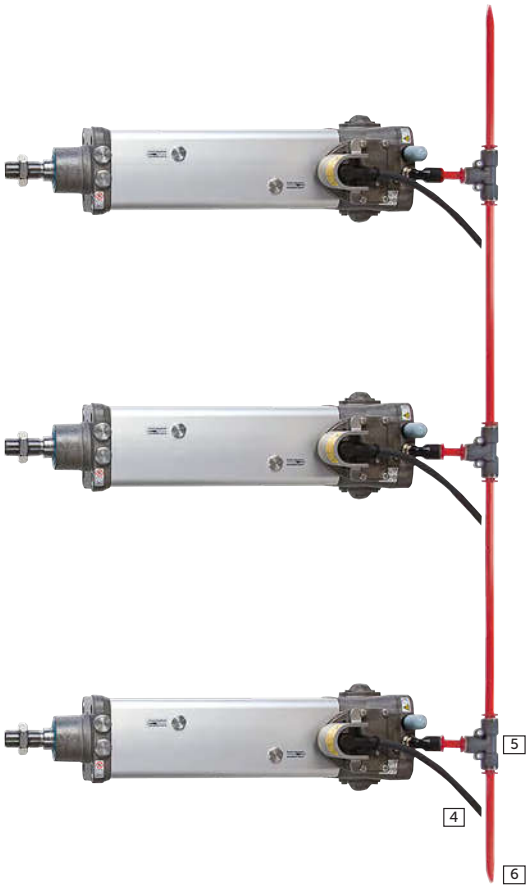

4 Electrical connection, cable lengh 5 m
5 Tee fitting
6 Air supply

One of the advantages of the IVAC cylinders is to use the output ports (2 & 4) from the main valve to operate an additional cylinder.

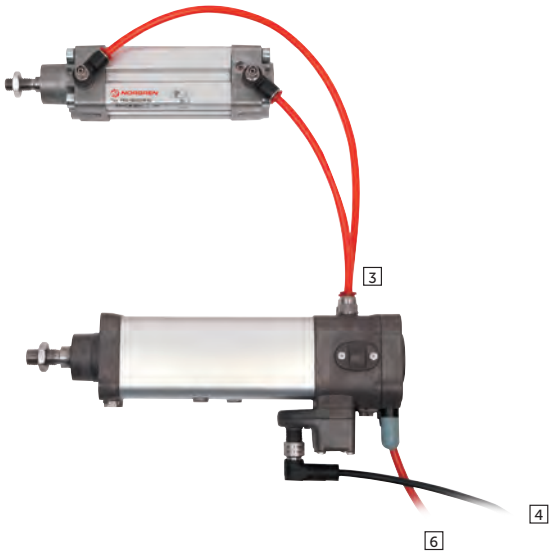

3 Output ports (2 & 4)
4 Electrical connection, cable lengh 5 m
6 Air supply

Our policy is one of continued research and development. We therefore reserve the right to amend, without notice, the specifications given in this document. (2013 - 1237h) © 2024 Norgren Ltd.

Mountings and service kit

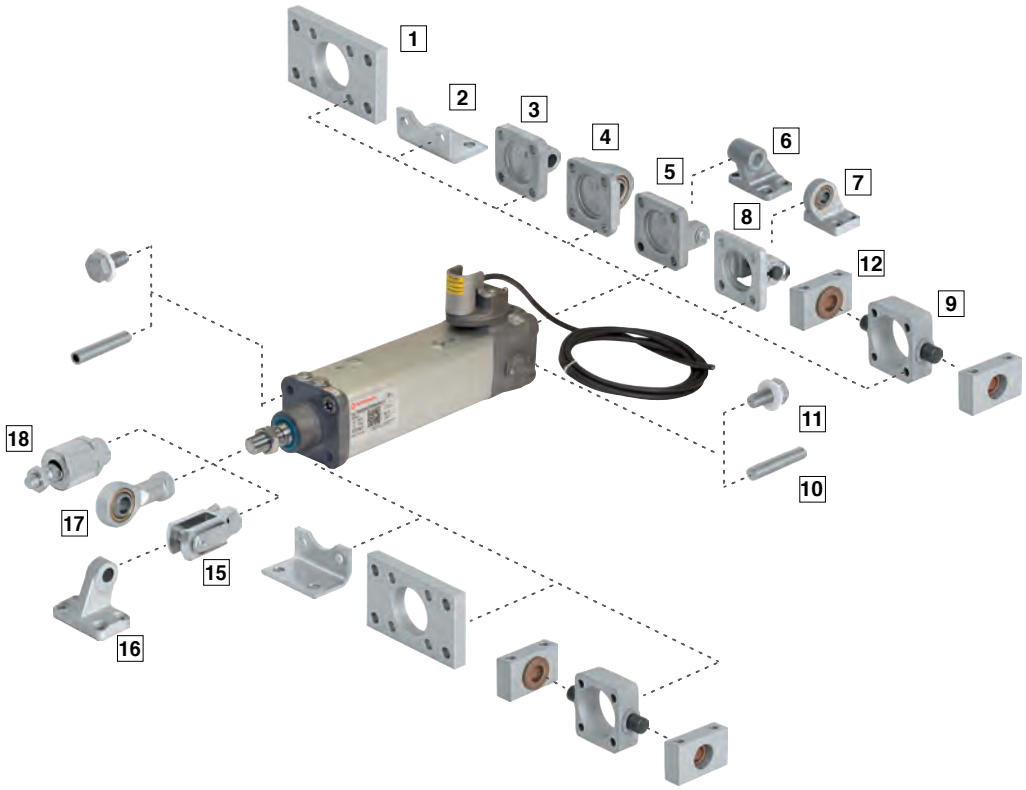

Position	Style	Standard	Corrosion protected	Stainless steel
1	B, G	Clear anodised aluminium	Clear anodised aluminium. Screws: A2	X 5 Cr Ni 18 10 (1.4301; AISI 304). Screws: A2
2	C	Galvanized steel (ø 32 ... 63 mm) Painted steel (ø 80 & 100 mm)	–	X 5 Cr Ni 18 10 (1.4301; AISI 304). Screws: A2
3	R	Diecast aluminium	Black corrosion protected diecast aluminium. Certified for the food industry. Screws: A2	-
4	UR	Galvanized aluminium Inner ring: steel Outer ring: brass	Black corrosion protected diecast aluminium Certified for the food industry Inner ring: stainless Steel (austenitic) Outer ring: nickel plated hardened steel	-
5	D	Diecast aluminium Bolt: galvanized steel (martensitic) Circlip: galvanized steel	Black corrosion protected diecast aluminium Certified for the food industry Bolt: X 10 Cr Ni S 18 9 (1.4305, AISI 303) Circlip: Stainless steel (martensitic). Screws: A2	X 5 Cr Ni 18 10 (1.4301; AISI 304). Screws: A2 Bolt: X 10 Cr Ni S 18 9 (1.4305; AISI 303)
6	SW	Diecast aluminium	Black corrosion protected diecast aluminium Certified for the food industry	X 6 Cr Ni 18 9 (1.4308; AISI 304)
7	US	Galvanized aluminium. Inner ring: steel Outer ring: brass	–	–
8	D2	Painted cast iron. Bolt: stainless steel (martensitic) Circlip: galvanized steel	–	–
9	FH	Cast iron	–	–
10	A	Galvanized steel	–	–
11	Screw	–	–	X 10 Cr Ni S 18 9 (1.4305, AISI 303)
12	S	Clear anodised aluminium Bearing: brass		
15	F	Galvanized steel Bolt: galvanized steel Circlip: Galvanized steel	Nickel plated steel Circlip: X 10 Cr Ni S 18 9 (1.4305, AISI 303) Bolt: X 10 Cr Ni S 18 9 (1.4305, AISI 303)	X 10 Cr Ni S 18 9 (1.4305; AISI 303) Bolt: X 10 Cr Ni S 18 9 (1.4305; AISI 303) Eyebolt: X 10 Cr Ni S 18 9 (1.4305; AISI 303)
16	SS	Painted cast iron	–	–
17	UF	Galvanized steel. Inner ring: steel Outer ring: brass	Nickel plated steel. Inner ring: stainless steel (austenitic) Outer ring: nickel plated hardened steel.	X 10 Cr Ni S 18 9 (1.4305; AISI 303), Inner ring X 105 Cr Co Mo 18-2 (1.4528), Outer ring X 5 Cr Ni 18 10 (1.4301; AISI 304)
18	AK	Galvanized steel	–	–

Our policy is one of continued research and development. We therefore reserve the right to amend, without notice, the specifications given in this document. (2013 - 1237h) © 2024 Norgren Ltd.

Mountings

Model	A	AK	B, G	C	D	D2	F	FH	R
									
Cyl. ø	10 Page 10	18 Page 10	1 Page 10	2 Page 10	5 Page 11	8 Page 11	15 Page 11	9 Page 11	3 Page 12
32	QM/8032/35	QM/8025/38	QA/8032/22	QA/8032/21	QA/8032/23	QA/8032/42	QM/8025/25	QA/8032/34	QA/8032/27
40	QM/8032/35	QM/8040/38	QA/8040/22	QA/8040/21	QA/8040/23	QA/8040/42	QM/8040/25	QA/8040/34	QA/8040/27
50	QM/8050/35	QM/8050/38	QA/8050/22	QA/8050/21	QA/8050/23	QA/8050/42	QM/8050/25	QA/8050/34	QA/8050/27
63	QM/8050/35	QM/8050/38	QA/8063/22	QA/8063/21	QA/8063/23	QA/8063/42	QM/8050/25	QA/8063/34	QA/8063/27
80	QM/8080/35	QM/8080/38	QA/8080/22	QA/8080/21	QA/8080/23	QA/8080/42	QM/8080/25	QA/8080/34	QA/8080/27
100	QM/8080/35	QM/8080/38	QA/8100/22	QA/8100/21	QA/8100/23	QA/8100/42	QM/8080/25	QA/8100/34	QA/8100/27
Corrosion protected									
32	–	–	PVQA/8032/22	–	PVQA/8032/23	–	PVQM/8025/25	–	PVQA/8032/27
40	–	–	PVQA/8040/22	–	PVQA/8040/23	–	PVQM/8040/25	–	PVQA/8040/27
50	–	–	PVQA/8050/22	–	PVQA/8050/23	–	PVQM/8050/25	–	PVQA/8050/27
63	–	–	PVQA/8063/22	–	PVQA/8063/23	–	PVQM/8050/25	–	PVQA/8063/27
80	–	–	PVQA/8080/22	–	PVQA/8080/23	–	PVQM/8080/25	–	PVQA/8080/27
100	–	–	PVQA/8100/22	–	PVQA/8100/23	–	PVQM/8080/25	–	PVQA/8100/27
Stainless steel									
32	–	–	KQA/8032/22	KQA/8032/21	KQA/8032/23	–	KQM/55433/25	–	–
40	–	–	KQA/8040/22	KQA/8040/21	KQA/8040/23	–	KQM/55441/25	–	–
50	–	–	KQA/8050/22	KQA/8050/21	KQA/8050/23	–	KQM/55451/25	–	–
63	–	–	KQA/8063/22	KQA/8063/21	KQA/8063/23	–	KQM/55451/25	–	–
80	–	–	KQA/8080/22	KQA/8080/21	KQA/8080/23	–	KQA/8080/25	–	–
100	–	–	KQA/8100/22	KQA/8100/21	KQA/8100/23	–	KQA/8080/25	–	–

	S	SS	SW	UF	UR	US	Cover screws	Plug protection	Service kit
									
Cyl. ø	12 Page 12	16 Page 13	6 Page 12	17 Page 12	4 Page 13	7 Page 13	11 Page 13		
32	QA/8032/41	M/P19931	M/P19493	QM/8025/32	QA/8032/33	M/P40310		M/P74654	PRQA/882032/00
40	QA/8040/41	M/P19932	M/P19494	QM/8040/32	QA/8040/33	M/P40311		M/P74654	PRQA/882040/00
50	QA/8040/41	M/P19933	M/P19495	QM/8050/32	QA/8050/33	M/P40312		M/P74654	PRQA/882050/00
63	QA/8063/41	M/P19934	M/P19496	QM/8050/32	QA/8063/33	M/P40313		M/P74654	PRQA/882063/00
80	QA/8063/41	M/P19935	M/P19497	QM/8080/32	QA/8080/33	M/P40314		M/P74654	PRQA/882080/00
100	QA/8100/41	M/P19936	M/P19498	QM/8080/32	QA/8100/33	M/P40315		M/P74654	PRQA/882100/00
Corrosion protected									
32	–	–	M/P40459	PVQM/8025/32	PVQA/8032/33	–	–	–	–
40	–	–	M/P40460	PVQM/8040/32	PVQA/8040/33	–	–	–	–
50	–	–	M/P40461	PVQM/8050/32	PVQA/8050/33	–	–	–	–
63	–	–	M/P40462	PVQM/8050/32	PVQA/8063/33	–	–	–	–
80	–	–	M/P40463	PVQM/8080/32	PVQA/8080/33	–	–	–	–
100	–	–	M/P40464	PVQM/8080/32	PVQA/8100/33	–	–	–	–
Stainless steel									
32	–	–	M/P72288	KQM/8032/32	–	–	PVQA/882032/88	–	–
40	–	–	M/P72289	KQM/8040/32	–	–	PVQA/882032/88	–	–
50	–	–	M/P72290	KQM/8050/32	–	–	PVQA/882050/88	–	–
63	–	–	M/P72291	KQM/8050/32	–	–	PVQA/882050/88	–	–
80	–	–	M/P72292	KQM/8080/32	–	–	PVQA/882080/88	–	–
100	–	–	M/P72293	KQM/8080/32	–	–	PVQA/882080/88	–	–

Our policy is one of continued research and development. We therefore reserve the right to amend, without notice, the specifications given in this document. (2013 - 1237h) © 2024 Norgren Ltd.

Dimensions

Dimensions in mm
Projection/First angle

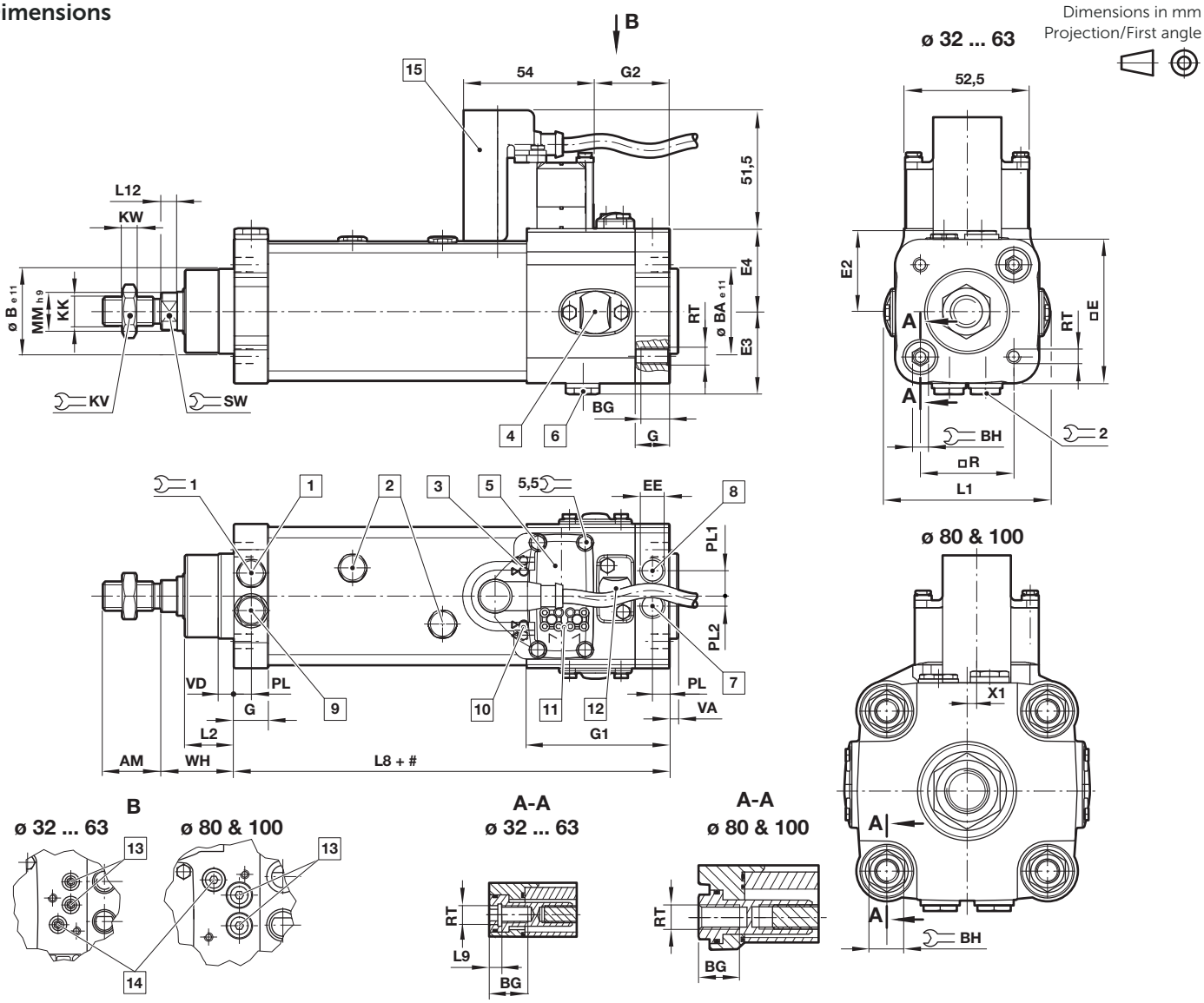

Stroke
1 Cushion adjustment front end cover
2 Magnetically operated switches (AF 11)
3 LED - magnetically operated switches
4 Main valve
5 Valve control module (VCM)
6 Output ports (2&4)
7 Air supply
8 Exhaust position, do not obstruct
9 Without function - do not use
10 LED - pilot valve
11 Manual override
12 Cover for cushion and Speed control adjustment
13 Speed control adjustment
14 Cushion adjustment rear end cover
15 Plug protection

ø	AM	ø B e11	ø BA e11	BG	BH	... E	E2	E3	E4	EE	G	G1	G2	KK	KW	L1	L2	L8	L9	L12
32	22	30	30	16	6	53	31	31	32	G1/8	14	59	30,5	M10x1,25	5	68,5	20	94	4	4,5
40	24	35	35	16	6	60	34,5	34	34	G1/8	14	59	30,5	M12x1,25	6	68,5	21	105	4	6,5
50	32	40	40	16	8	71,5	40	39	39	G1/8	14	63	34,5	M16x1,5	8	92,5	28	106	5	6,5
63	32	45	45	16	8	82	46	45,5	45,5	G1/4	19	66	38	M16x1,5	8	91,5	28	121	5	6,5
80	40	45	45	17	16	99	54	54	57	G1/4	19	74,5	46,5	M20x1,5	10	110	35	128	-	7,5
100	40	55	55	17	16	119	65	65	65	G3/8	24,5	81	53	M20x1,5	10	144,5	38	138	-	10

ø	ø MM h9	PL	PL1	PL2	... R	RT	VA	VD	WH	X1	KV	SW	1	2	at 0 mm	per 25 mm	Model
32	12	7	10,5	4	32,5	M 6	3	6	26	0	17	10	11	12	0,66 kg	0,07 kg	PRA/882032/MI+/M-/EX/*
40	16	7	10,5	4	38	M 6	3,5	6	30	0	19	13	11	12	1,03 kg	0,11 kg	PRA/882040/MI+/M-/EX/*
50	20	7	12,5	4	46,5	M 8	3,5	6	37	1,5	24	17	13	12	1,58 kg	0,18 kg	PRA/882050/MI+/M-/EX/*
63	20	9,5	14,5	6	56,5	M 8	4	6	37	0	24	17	13	15	2,42 kg	0,19 kg	PRA/882063/MI+/M-/EX/*
80	25	9,5	14	6	72	M 10	4	6	46	6	30	22	17	15	4,12 kg	0,29 kg	PRA/882080/MI+/M-/EX/*
100	25	12	16,5	8,5	89	M 10	4	6	51	6,5	30	22	17	19	6,34 kg	0,35 kg	PRA/882100/MI+/M-/EX/*

* Please insert standard stroke length
\+ Please insert valve function
\- Please insert switch variants (Reed switches for ø 40 ... 100 mm only)

Our policy is one of continued research and development. We therefore reserve the right to amend, without notice, the specifications given in this document. (2013 - 1237h) © 2024 Norgren Ltd.

P.A/882000/MG./M+/*; Cylinder with piston rod bellow

Dimensions in mm
Projection/First angle

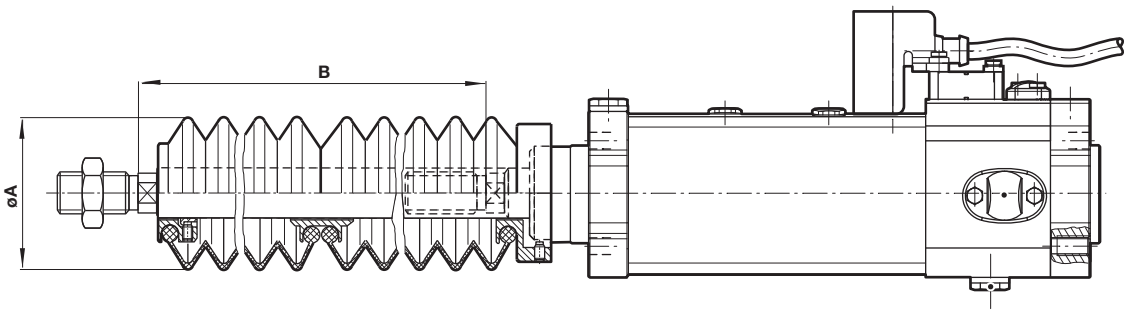

Cyl. ø	ø A	Stroke max per bellow	Piston rod extention B for first bellow	for further bellows	Model
32	40	60	30	25	P#A/882032/MG+/M./*
40	63	145	50	32	P#A/882040/MG+/M./*
50	63	145	40	32	P#A/882050/MG+/M./*
63	63	145	40	32	P#A/882063/MG+/M./*
80	80	250	50	45	P#A/882080/MG+/M./*
100	80	250	50	45	P#A/882100/MG+/M./*

* Standard stroke length
# Piston rod material
+ Valve function
. Magnetic switch (Reed switches for ø 40 ... 100 mm only)

Our policy is one of continued research and development. We therefore reserve the right to amend, without notice, the specifications given in this document. (2013 - 1237h) © 2024 Norgren Ltd.

Mountings
Front or rear stud mounting A
Conforms to ISO 15552, type MX1



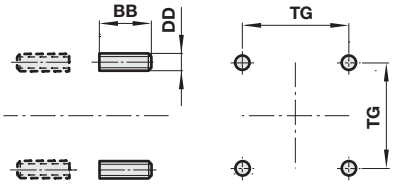

Standard

ø	BB	DD	TG	kg	Model (A)
32/40	17	M6	32,5/38	0,02	QM/8032/35
50/63	23	M8	46,5/56,5	0,05	QM/8050/35
80/100	28	M10	72/89	0,08	QM/8080/35

Dimensions in mm
Projection/First angle



Piston rod swivel AK



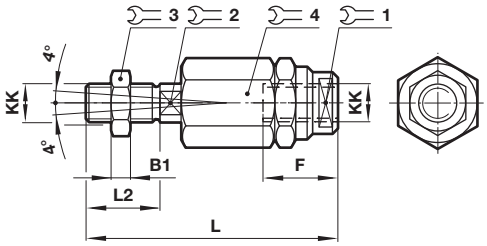

Standard

ø	KK	B1	F	L	L2	1	2	3	4	kg	Model (AK)
32	M10x1,25	5	26	73	20	19	12	17	30	0,20	QM/8025/38
40	M12x1,25	6	26	77	24	19	12	19	30	0,20	QM/8040/38
50/63	M16x1,5	8	34	106	32	30	19	24	42	0,65	QM/8050/38
80/100	M20x1,5	10	42	122	40	30	19	30	42	0,72	QM/8080/38

Front flange B, G
Conforms to ISO 15552, type MF1 and MF2



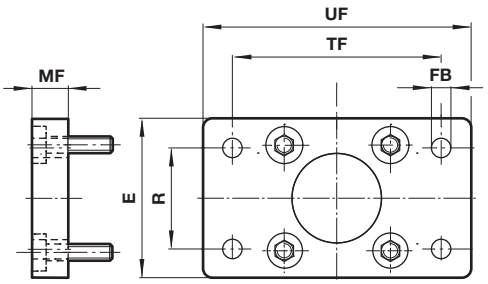

Standard

ø	E	ø FB	MF	R	TF	UF	kg	Model (B, G)
32	50	7	10	32	64	80	0,25	QA/8032/22
40	55	9	10	36	72	90	0,35	QA/8040/22
50	65	9	12	45	90	110	0,70	QA/8050/22
63	75	9	12	50	100	125	0,80	QA/8063/22
80	100	12	16	63	126	154	1,35	QA/8080/22
100	120	14	16	75	150	186	2,20	QA/8100/22
Corrosion protected version								
32	50	7	10	32	64	80	0,25	PVQA/8032/22
40	55	9	10	36	72	90	0,35	PVQA/8040/22
50	65	9	12	45	90	110	0,7	PVQA/8050/22
63	75	9	12	50	100	125	0,8	PVQA/8063/22
80	100	12	16	63	126	154	1,35	PVQA/8080/22
100	120	14	16	75	150	186	2,2	PVQA/8100/22
Stainless steel								
32	50	7	10	32	64	80	0,26	KQA/8032/22
40	55	9	10	36	72	90	0,31	KQA/8040/22
50	65	9	12	45	90	110	0,56	KQA/8050/22
63	75	9	12	50	100	125	0,73	KQA/8063/22
80	100	12	16	63	126	154	1,73	KQA/8080/22
100	120	14	16	75	150	186	2,51	KQA/8100/22

Foot mounting C
Conforms to ISO 15552, type MS1

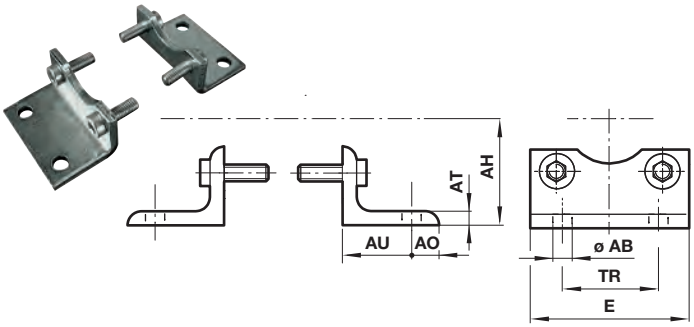

Standard

ø	ø AB	AH	AO	AT	AU	E	TR	kg	Model (C)
32	7	32	8	4	24	48	32	0,15	QA/8032/21
40	10	36	9	4	28	53	36	0,18	QA/8040/21
50	10	45	10	5	32	64	45	0,30	QA/8050/21
63	10	50	12	5	32	74	50	0,39	QA/8063/21
80	12	63	19	5	41	98	63	0,80	QA/8080/21
100	14	71	19	5	41	115	75	0,95	QA/8100/21
Stainless steel									
32	7	32	11	4	24	48	32	0,16	KQA/8032/21
40	9	36	12	5	28	53	36	0,19	KQA/8040/21
50	9	45	13	5	32	64	45	0,32	KQA/8050/21
63	9	50	13	5	32	74	50	0,41	KQA/8063/21
80	12	63	19	6	41	98	63	0,83	KQA/8080/21
100	14	71	19	6	41	115	75	0,98	KQA/8100/21

Our policy is one of continued research and development. We therefore reserve the right to amend, without notice, the specifications given in this document. (2013 - 1237h) © 2024 Norgren Ltd.

Rear clevis D
Conforms to ISO 15552, type MP2

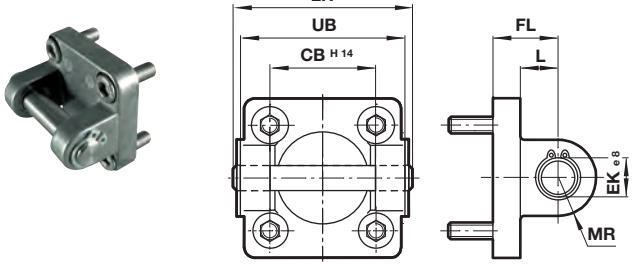

Standard

ø	CB H14	ø EK e8	FL	L	LH	MR	UB	kg	Model (D)
32	26	10	22	13	52	9	45	0,11	QA/8032/23
40	28	12	25	16	60	12	52	0,16	QA/8040/23
50	32	12	27	17	68	12	60	0,22	QA/8050/23
63	40	16	32	22	79	15	70	0,34	QA/8063/23
80	50	16	36	22	99	15	90	0,54	QA/8080/23
100	60	20	41	27	119	20	110	0,90	QA/8100/23
Corrosion protected version									
32	26	10	22	13	52	9	45	0,11	PVQA/8032/23
40	28	12	25	16	60	12	52	0,16	PVQA/8040/23
50	32	12	27	17	68	12	60	0,22	PVQA/8050/23
63	40	16	32	22	79	15	70	0,34	PVQA/8063/23
80	50	16	36	22	99	15	90	0,54	PVQA/8080/23
100	60	20	41	27	119	20	110	0,9	PVQA/8100/23
Stainless steel									
32	26	10	22	13	52	9	45	0,11	KQA/8032/23
40	28	12	25	16	60	12	52	0,16	KQA/8040/23
50	32	12	27	17	68	12	60	0,22	KQA/8050/23
63	40	16	32	22	79	15	70	0,34	KQA/8063/23
80	50	16	36	22	99	15	90	0,54	KQA/8080/23
100	60	20	41	27	119	20	110	0,9	KQA/8100/23

Rear clevis D2
Conforms to ISO 15552, type AB6

Dimensions in mm
Projection/First angle

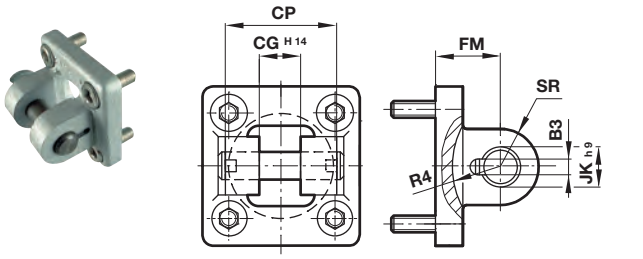

Standard

ø	B1 H14	B2	B3	ø EK h9	FL	R1	R2	kg	Model (D2)
32	14	34	3,3	10	22	11	17	0,20	QA/8032/42
40	16	40	4,3	12	25	12	20	0,23	QA/8040/42
50	21	45	4,3	16	27	14,5	22	0,36	QA/8050/42
63	21	51	4,3	16	32	18	25	0,55	QA/8063/42
80	25	65	4,3	20	36	22	30	0,90	QA/8080/42
100	25	75	4,3	20	41	22	32	1,45	QA/8100/42

Piston rod clevis F
Conforms to DIN ISO 8140

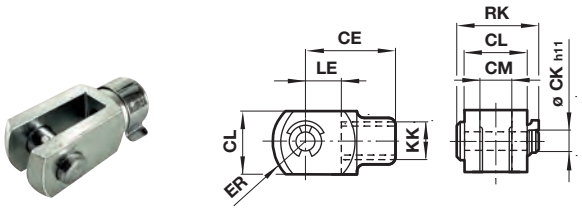

Standard

ø	KK	CE	ø CKh11	CL	CM	ER	LE	RK	kg	Model (F)
32	M10x1,25	40	10	20	10	16	20	28	0,09	QM/8025/25
40	M12x1,25	48	12	24	12	19	24	32	0,13	QM/8040/25
50/63	M16x1,5	64	16	32	16	25	32	41,5	0,33	QM/8050/25
80/100	M20x1,5	80	20	40	20	32	40	50	0,67	QM/8080/25
Corrosion protected version										
32	M10x1,25	40	10	20	10	16	20	28	0,09	PVQM/8032/25
40	M12x1,25	48	12	24	12	19	24	32	0,13	PVQM/8040/25
50/63	M16x1,5	64	16	32	16	25	32	41,5	0,33	PVQM/8050/25
80/100	M20x1,5	80	20	40	20	32	40	50	0,67	PVQM/8080/25
Stainless steel										
32	M10x1,25	40	10	20	10	16	20	28	0,09	KQM/55433/25
40	M12x1,25	48	12	24	12	19	24	32	0,13	KQM/55441/25
50/63	M16x1,5	64	16	32	16	25	32	41,5	0,33	KQM/55451/25
80/100	M20x1,5	80	20	40	20	32	40	50	0,67	KQM/8080/25

Front or rear detachable trunnion FH
Conforms to VDMA 24562 part 2, type MT 5/6

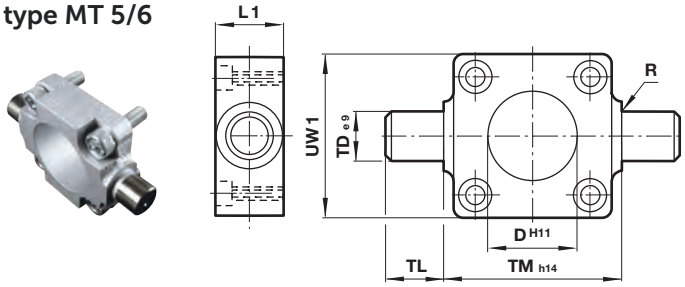

Standard

ø	ø D h11	L1	R	ø TD e9	TL	TM h14	UW1	kg	Model (FH)
32	30	16	1	12	12	50	45	0,20	QA/8032/34
40	35	20	1,6	16	16	63	55	0,38	QA/8040/34
50	40	24	1,6	16	16	75	65	0,60	QA/8050/34
63	45	24	1,6	20	20	90	75	1,10	QA/8063/34
80	45	28	1,6	20	20	110	100	1,90	QA/8080/34
100	55	38	2	25	25	132	120	3,50	QA/8100/34

Our policy is one of continued research and development. We therefore reserve the right to amend, without notice, the specifications given in this document. (2013 - 1237h) © 2024 Norgren Ltd.

Rear eye R
Conforms to ISO 15552, type MP4



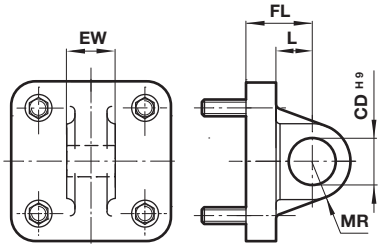

Standard

ø	ø CD H9	EW	FL	L	MR	kg	Model (R)
32	10	25,8	22	13	9	0,09	QA/8032/27
40	12	27,8	25	16	12	0,11	QA/8040/27
50	12	31,7	27	17	12	0,17	QA/8050/27
63	16	39,7	32	22	15	0,24	QA/8063/27
80	16	49,7	36	22	15	0,37	QA/8080/27
100	20	59,7	41	27	20	0,59	QA/8100/27
Corrosion protected version							
32	10	25,8	22	13	9	0,09	PVQA/8032/27
40	12	27,8	25	16	12	0,11	PVQA/8040/27
50	12	31,7	27	17	12	0,17	PVQA/8050/27
63	16	39,7	32	22	15	0,24	PVQA/8063/27
80	16	49,7	36	22	15	0,37	PVQA/8080/27
100	20	59,7	41	27	20	0,59	PVQA/8100/27

Trunnion support S
Conforms to ISO 15552, type AT4

Dimensions in mm
Projection/First angle



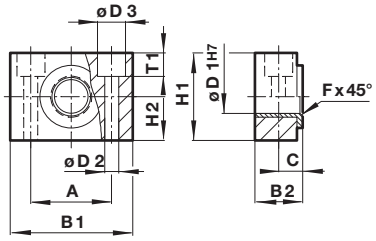

Standard

ø	A	B 1	B 2	C	ø D1H7	ø D2	ø D3	F x 45°	H 1	H 2	T1	kg	Model (S)
32	32	46	18	10,5	12	6,6	11	1	30	15	6,8	0,10	QA/8032/41
40/50	36	55	21	12	16	9	15	1,6	36	18	9	0,14	QA/8040/41
63/80	42	65	23	13	20	11	18	1,6	40	20	11	0,18	QA/8063/41
100	50	75	28,5	16	25	14	20	2	50	25	13	0,34	QA/8100/41

Universal piston rod eye UF
Conforms to DIN ISO 8139



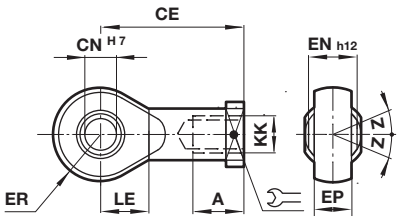

Standard

ø	Thread KK	AX	CE	ø CN H7	EN -0,1	ER	LE	Z	kg	Model (UF)
32	M10x1,25	20	43	10	14	14	15	13°	0,09	QM/8025/32
40	M12x1,25	22	50	12	16	16	17	13°	0,13	QM/8040/32
50/63	M16x1,5	28	64	16	21	21	22	15°	0,33	QM/8050/32
80/100	M20x1,5	33	77	20	25	25	26	15°	0,67	QM/8080/32
Corrosion protected version										
32	M10x1,25	20	43	10	14	14	15	13°	0,09	PVQM/8025/32
40	M12x1,25	22	50	12	16	16	17	13°	0,13	PVQM/8040/32
50/63	M16x1,5	28	64	16	21	21	22	15°	0,33	PVQM/8050/32
80/100	M20x1,5	33	77	20	25	25	26	15°	0,4	PVQM/8080/32
Stainless steel										
32	M10x1,25	20	43	10	14	14,5	14	13°	0,07	KQM/8032/32
40	M12x1,25	22	50	12	16	16,5	16	13°	0,11	KQM/8040/32
50/63	M16x1,5	28	64	16	21	21,5	21	15°	0,21	KQM/8050/32
80/100	M20x1,5	33	77	20	25	25,5	25	15°	0,38	KQM/8080/32

Wide hinge SW
Conforms to ISO 15552, type AB7



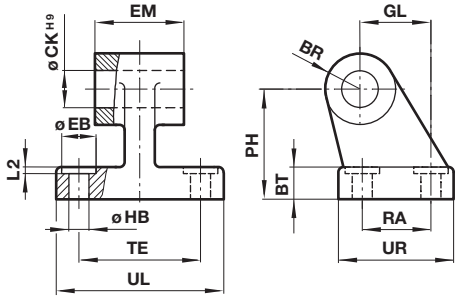

Standard

ø	CA	ø CKH9	ø D	H 2	EM	G 1	G 2	G 3	K 1	K 2	L 1	R	ø S	kg	Model (SW)
32	32	10	11	7	25,5	21	18	31	38	50	1,6	10	6,6	0,05	M/P19493
40	36	12	11	9	27,5	24	22	35	41	54	1,6	11	6,6	0,07	M/P19494
50	45	12	15	11	31,5	33	30	45	50	65	1,6	13	9	0,14	M/P19495
63	50	16	15	12	39,5	37	35	50	52	67	1,6	15	9	0,18	M/P19496
80	63	16	18	14	49,5	47	40	60	66	84	2,5	15	11	0,28	M/P19497
100	71	20	18	15	59,5	55	50	70	76	94	2,5	19	11	0,42	M/P19498
Corrosion protected version															
32	32	10	11	8	26,5	21	18	31	38	51	1,6	10	6,6	0,05	M/P40459
40	36	12	11	10	28,5	24	22	35	41	54	1,6	11	6,6	0,07	M/P40460
50	45	12	15	12	32,5	33	30	45	50	65	1,6	13	9	0,14	M/P40461
63	50	16	15	12	40,5	37	35	50	52	67	1,6	15	9	0,18	M/P40462
80	63	16	18	14	50,5	47	40	60	66	86	2,5	15	11	0,28	M/P40463
100	71	20	18	15	60,5	55	50	70	76	96	2,5	19	11	0,42	M/P40464
Stainless steel															
32	32	10	11	8	26	21	18	31	38	51	1,6	10	6,6	0,15	M/P72288
40	36	12	11	10	28	24	22	35	41	53	1,6	11	6,6	0,21	M/P72289
50	45	12	15	12	32	33	30	45	50	65	1,6	13	9	0,41	M/P72290
63	50	16	15	12	40	37	35	50	52	67	1,6	15	9	0,53	M/P72291
80	63	16	18	14	50	47	40	60	66	86	2,5	15	11	0,82	M/P72292
100	71	20	18	15	60	55	50	70	76	96	2,5	19	11	1,22	M/P72293

Our policy is one of continued research and development. We therefore reserve the right to amend, without notice, the specifications given in this document. (2013 - 1237h) © 2024 Norgren Ltd.

Universal rear eye UR
Conforms to ISO 15552, type MP6



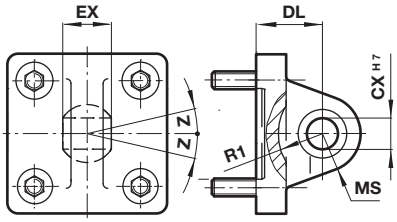

Standard

ø	ø CN H7	EN	ER	FL	R	Z	kg	Model (UR)
32	10	14	16	22	14,5	13°	0,15	QA/8032/33
40	12	16	18	25	18	13°	0,25	QA/8040/33
50	16	21	21	27	19	15°	0,40	QA/8050/33
63	16	21	23	32	24	15°	0,55	QA/8063/33
80	20	25	28	36	24	15°	0,90	QA/8080/33
100	20	25	30	41	29	15°	1,50	QA/8100/33
Corrosion protected version								
32	10	14	16	22	14,5	13°	0,15	PVQA/8032/33
40	12	16	19	25	18	13°	0,25	PVQA/8040/33
50	16	21	21	27	19	13°	0,4	PVQA/8050/33
63	16	21	24	32	24	15°	0,55	PVQA/8063/33
80	20	25	28	36	24	15°	0,9	PVQA/8080/33
100	20	25	30	41	29	15°	1,5	PVQA/8100/33

Narrow hinge SS

Dimensions in mm
Projection/First angle



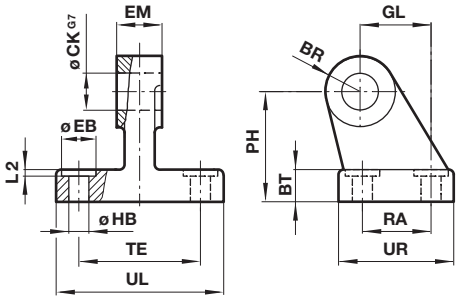

Standard

ø	CA	ø CNG7	ø D	H2	EM	G1	G2	G3	K1	K2	L1	R	ø S	kg	Model (SS)
32	32	10	11	8	10	21	18	31	38	51	1,6	10	6,6	0,15	M/P19931
40	36	12	11	10	12	24	22	35	41	54	1,6	11	6,6	0,20	M/P19932
50	45	16	15	12	16	33	30	45	50	65	1,6	13	9	0,48	M/P19933
63	50	16	15	12	16	37	35	50	52	67	1,6	15	9	0,50	M/P19934
80	63	20	18	14	20	47	40	60	66	86	2,5	15	11	0,75	M/P19935
100	71	20	18	15	20	55	50	70	76	96	2,5	19	11	1,20	M/P19936

Swivel hinge US
Conforms to VDMA 24562 part 2



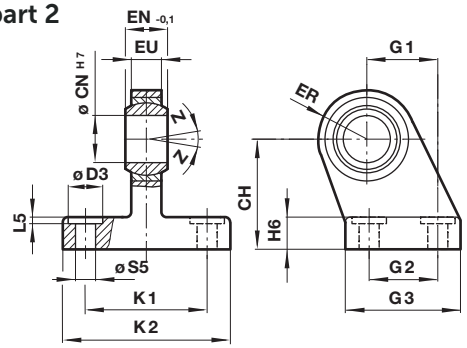

Standard

ø	CH	ø CN H7	ø D	EN -0,1	ER	EU	G1	G2	G3	H2	K1	K2	L1	ø S	Z	kg	Model (US)
32	32	10	11	14	16	10,5	21	18	31	10	38	51	1,6	6,6	13°	0,19	M/P40310
40	36	12	11	16	18	12	24	22	35	10	41	54	1,6	6,6	13°	0,24	M/P40311
50	45	16	15	21	21	15	33	30	45	12	50	65	1,6	9	13°	0,46	M/P40312
63	50	16	15	21	23	15	37	35	50	12	52	67	1,6	9	15°	0,59	M/P40313
80	63	20	18	25	28	18	47	40	60	14	66	86	2,5	11	15°	1,03	M/P40314
100	71	20	18	25	30	18	55	50	70	15	76	96	2,5	11	15°	1,40	M/P40315

Cover screw (stainless steel)



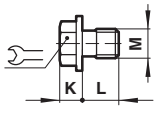

ø	M		K	L	kg	Model
32/40	M6	10	5,5	10,5	0,018	PVQA/882032/88
50/63	M8	13	6,8	10,5	0,041	PVQA/882050/88
80/100	M10	17	8,4	10	0,072	PVQA/882080/88

Our policy is one of continued research and development. We therefore reserve the right to amend, without notice, the specifications given in this document. (2013 - 1237h) © 2024 Norgren Ltd.

- ATEX - Magnetically operating switch, reed contact
- Suitable for all cylinder ranges with magnetic piston
- LED indicator
- CE verificated



Technical features

Operation:
Normal open with LED (yellow)
Switching voltage (Ub):
10 ... 240 V a.c./170 V d.c.
Switching voltage output:
Ub - 2,7 V
Switching current (see graph overleaf):
0,18 A max.
Switching power:
10 W/10 VA max.

Contact resistance:
150 mΩ
Response time:
1,8 ms
Operating temperatur:
-20 ... +50°C (-4 ... +122°F)
Ex-Identification:
II 3G Ex nC IIC T5 Gc X
II 3D Ex tc IIIC T120°C Dc X
Protection rating (EN 60529):
IP67

Cable type:
PVC 2 x 0,25 mm²
Cable length:
5 m
Electromagnetic compatibility according to:
EN 60947-5-2

Materials:
Body: plastic
Cable: see table below

Technical data - Reed switches - additional information see data sheet en 4.3.015

Symbol	Voltage (V a.c.)	Voltage (V d.c.)	Current maximum (mA)	Function	Operating temperature (°C)	LED	Protection class	Cable length (m)	Cable type	Weight (g)	Model
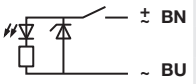	10 ... 240	10 ... 170	180	Closer	-20 ... +50	•	IP67	5	PVC 2 x 0,25	40	M/50/LXU/5V

Color code: BN = brown, BU = blue

Switching current and switching voltage

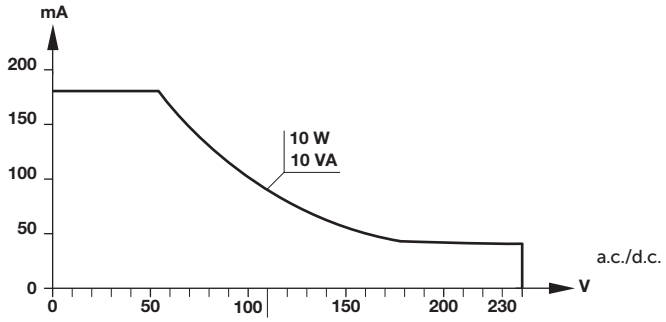

Dimensions
Cable length L = 5 m

Dimensions in mm
Projection/First angle

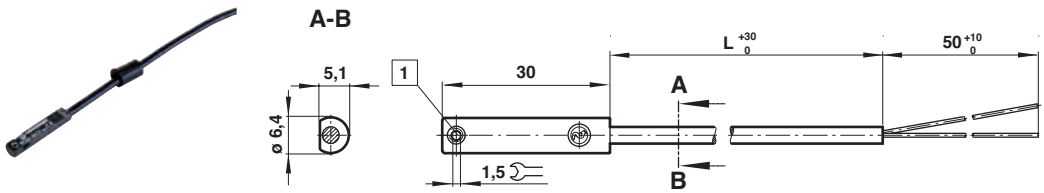

1 Fixing screw

ATTENTION:
The setting of magnetic switches on a cylinder barrel forms an ATEX assembly:
- Each part is separate classified according ATEX for use in potentially explosive atmospheres.
- The resulting range of approved applications for the module corresponds to that of the individual part assigned to the lowest category.
- The result concerns the device category, potentially explosive atmosphere G or D, max. surface temperature and explosion classification if applicable.

Our policy is one of continued research and development. We therefore reserve the right to amend, without notice, the specifications given in this document. (2013 - 1237h) © 2024 Norgren Ltd.

- ATEX - Magnetically operating switch, solid state
- Suitable for all cylinder ranges with magnetic piston
- LED indicator
- Resistant, reliable switching with a very fast response time
- Particularly suited for use in high levels of vibration
- CE verificated
- UL certificated



Technical features

Operation:
PNP-output with LED (yellow)
Switching voltage (Ub):
10 ... 30 V d.c.
Switching voltage output:
< 2,5V
Switching current (see graph):
150 mA max.
Switching power:
4,5 W max.

Response time:
< 0,1 ms
Switching frequency:
1 kHz
Operating temperatur:
-20 ... +50°C (-4 ... +122°F)
Ex-Identification:
II 3G Ex ec IIC T4 Gc X
II 3D Ex tc IIIC T110°C Dc X
Protection rating (EN 60529):
IP67

Cable type:
PVC 3 x 0,14 mm²
Cable length:
5 m
Electromagnetic compatibility according to:
EN 60947-5-2

Materials:
Body: plastic
Cable: see table below

Technical data - Solid state switches - additional information see data sheet en 4.3.017

Symbol	Voltage (V d.c.)	Current maximum (mA)	Function	Operating temperature (°C)	LED	Protection class	Cable length (m)	Cable type	Weight (g)	Model
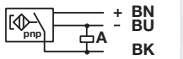	10 ... 30	150	PNP	-20 ... +50	•	IP67	5	PVC 3 x 0,14	40	M/50/EXP/5V

Color code: BK = black, BN = brown, BU = blue

Switching current and switching voltage

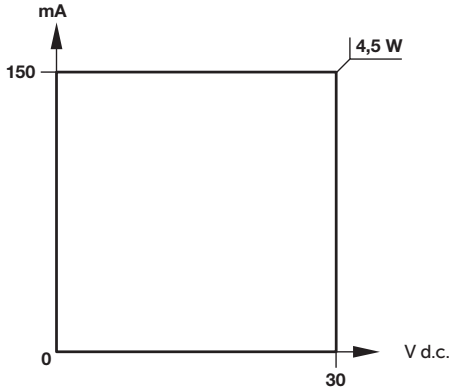

Dimensions
Cable length L = 5 m

Dimensions in mm
Projection/First angle



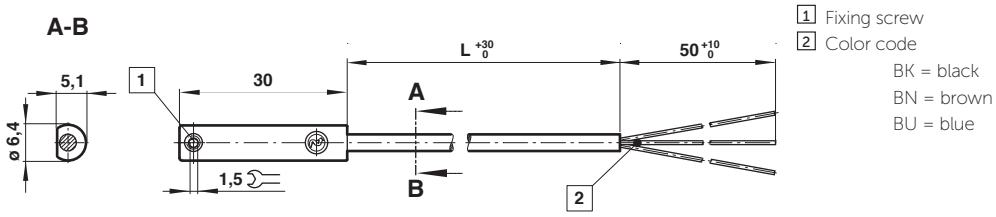

1 Fixing screw
2 Color code
BK = black
BN = brown
BU = blue

ATTENTION:
The setting of magnetic switches on a cylinder barrel forms an ATEX assembly:
- Each part is separate classified according ATEX for use in potentially explosive atmospheres.
- The resulting range of approved applications for the module corresponds to that of the individual part assigned to the lowest category.
- The result concerns the device category, potentially explosive atmosphere G or D, max. surface temperature and explosion classification if applicable.

Our policy is one of continued research and development. We therefore reserve the right to amend, without notice, the specifications given in this document. (2013 - 1237h) © 2024 Norgren Ltd.

Warning

These products are intended for use in industrial compressed air systems only. Do not use these products where pressures and temperatures can exceed those listed under **»Technical features/data«**. Before using these products with fluids other than those specified, for non-industrial applications, life-support systems or other applications not within published specifications, consult Norgren.

Through misuse, age, or malfunction, components used in fluid power systems can fail in various modes.

The system designer is warned to consider the failure modes of all component parts used in fluid power systems and to provide adequate safeguards to prevent personal injury or damage to equipment in the event of such failure.
System designers must provide a warning to end users in the system instructional manual if protection against a failure mode cannot be adequately provided.
System designers and end users are cautioned to review specific warnings found in instruction sheets packed and shipped with these products.

Our policy is one of continued research and development. We therefore reserve the right to amend, without notice, the specifications given in this document. (2013 - 1237h) © 2024 Norgren Ltd.