Brand of NTN corporation

Technical data

BBET25UU

Super ball bushings



VISUAL (S)

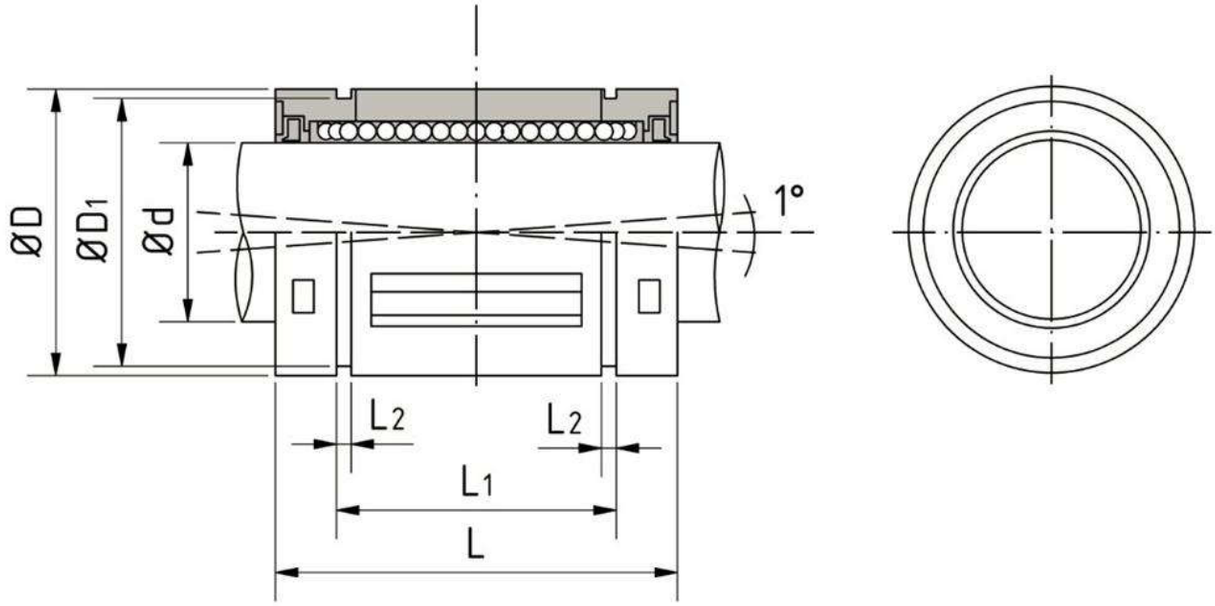

PRODUCT DEFINITION

Brand	SNR
Design type	BBET
Ball bushings category	Super ball bushings, closed
Standard	ISO dimension
Number of seals	2
Material outer cylinder or steel segments	100Cr6
Material Cage	PA
Initial greasing	Non/No
Re-lubricable	Oui/Yes

NTN Europe
1 rue des Usines · BP 2017 · 74010 Annecy Cedex · France · Tel. +33 (0)4 50 65 30 00
S.A. au capital de 322 639 919 € · RCS ANNECY B 325 821 072 · Id. Fiscale : FR 48 325 821 072
SIRET 325 821 072 00015 · Code APE 2815 Z · Code NACE 28.15

BBET25UU
Super ball bushings

PRODUCT DEFINITION	
d - Internal diameter	25 mm
d - Internal diameter tolerance	0,011/-0,001
D - External diameter	40 mm
L - Length	58 mm
L - Length tolerance	0,2/-0,2
L1	44,1 mm
L1 tolerance	0/-0,3
D1 - Diameter	37,5 mm
L2	1,85 mm
Diameter F H11	3 mm
G	1,5 mm
J	1,5 mm
Number of ball rows	6
Mass	0,123 kg

PRODUCT PERFORMANCE	
Cmin	3,78 kN
Cmax	4,838 kN
C0min	4,72 kN
C0max	6,042 kN
Tmin - Min operating temperature	-20 °C
Tmax - Max operating temperature	80 °C

ESHOPDONOTDISPLAY	
Reference	BBET25UU

ESHOPDONOTDISPLAY	
Image	BBET_1.JPG, BBET_3.JPG
Send to Eshop	Yes
Send to Paper Catalog	Yes
Tracepart	Oui/Yes