PARTS LIST			
ITEM	QTY	PART NUMBER	DESCRIPTION
1	2	M5605005	Front/Rear Bezel
2	1	M5601034	Base/Chassis Assembly
3	1	M5602013	Rear Panel
4	8	M5700202	Rack Card Guide
5	1	M5601070	Top Cover
6	1	M5600025	Handle Bar
7	8	M4 x 10 mm CSK	Bezel Fixing Screws
8	4	M3 x 8 mm Pan Screw	Rear Panel Screws
9	2	AS054231	Side Arm Kit

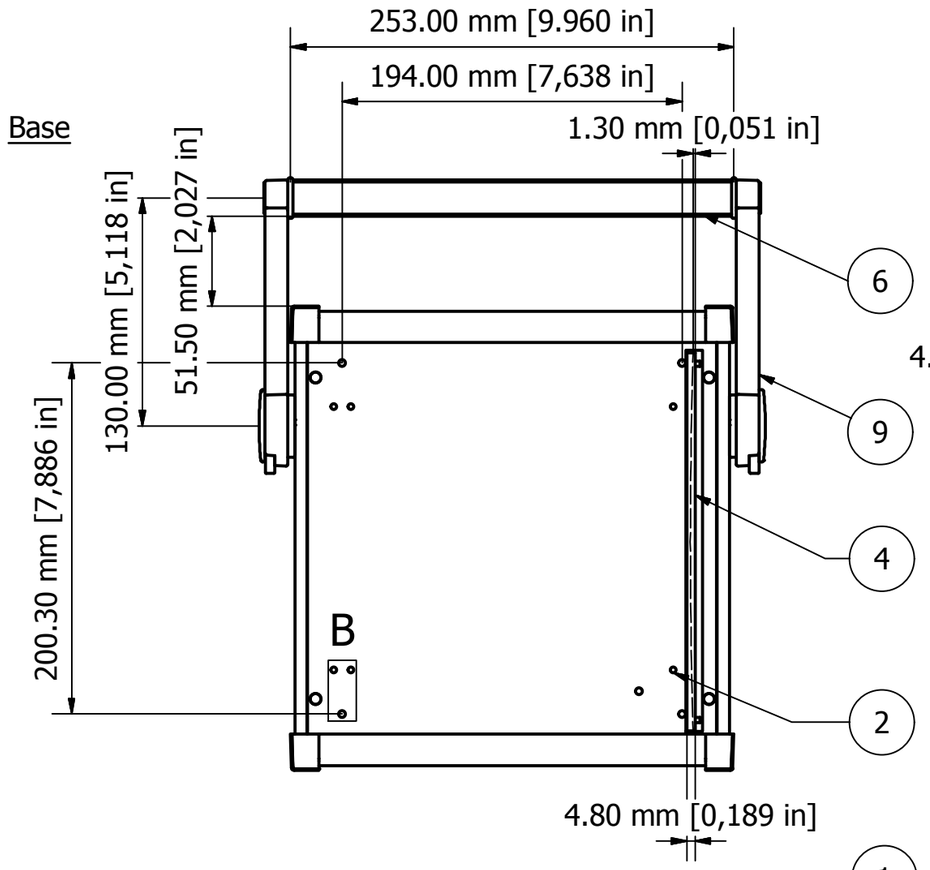

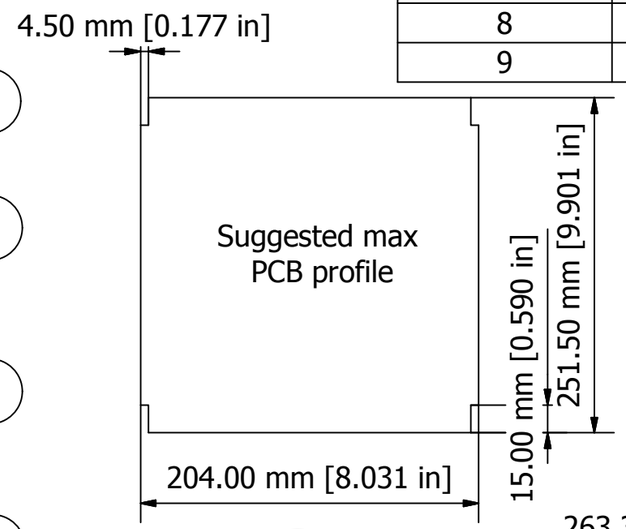

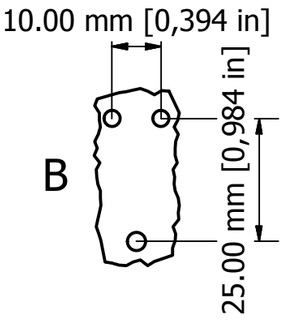

Foot hole detail:
2 holes Ø3.3 mm [0.13 in] & 1 hole Ø 3.8 mm [0.15 in]

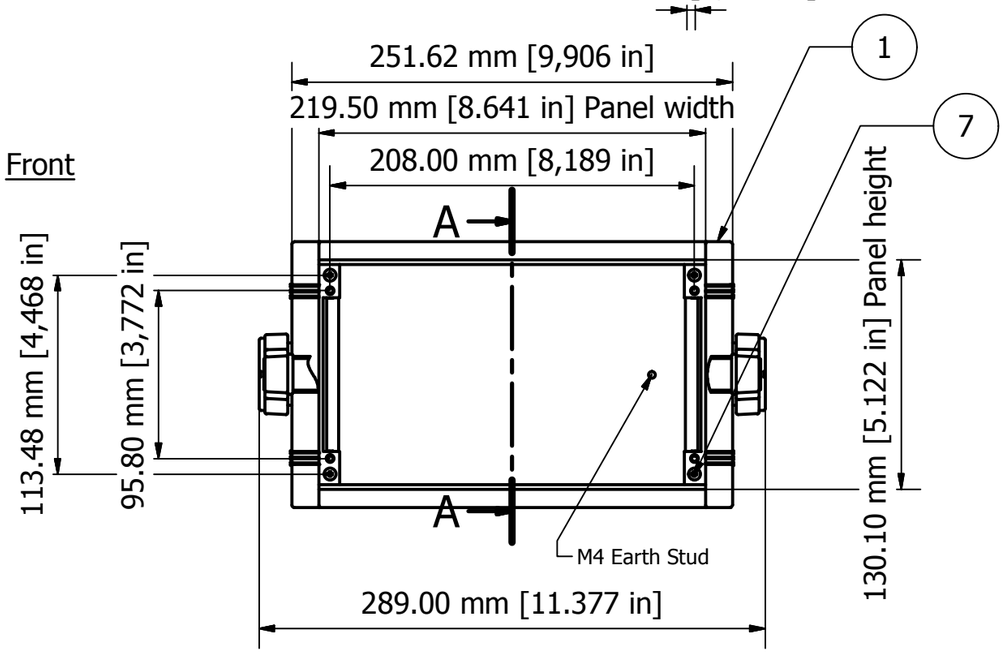

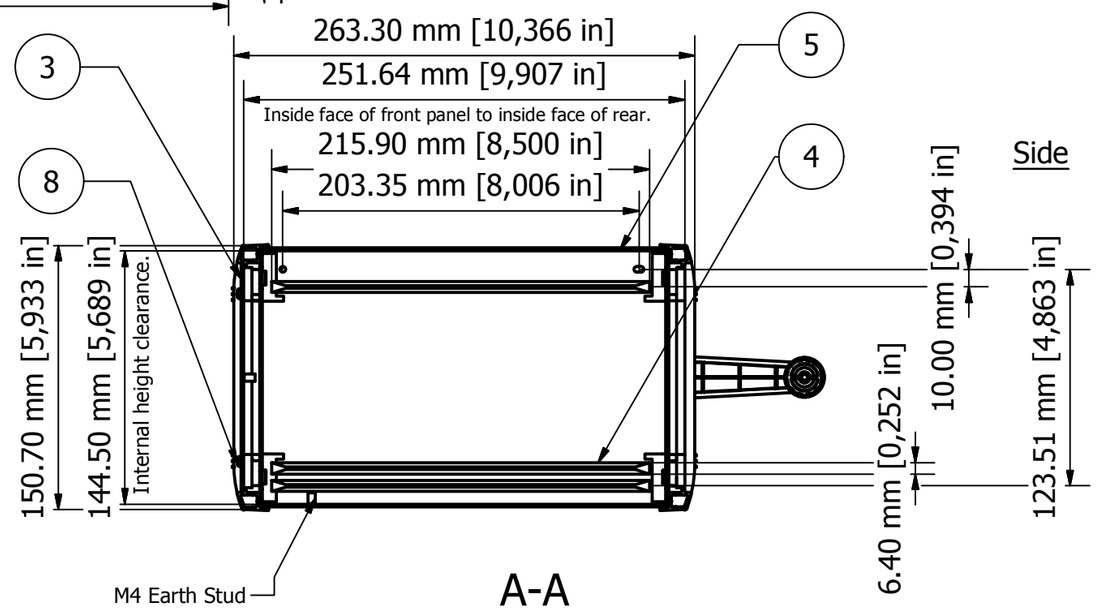

Notes:
1) Case is fabricated from 1.5 mm aluminium sheet with die cast & extrusion bezels.
2) Case is powder coat painted fine texture with RAL 7040 bezels and RAL 7035 panelwork.
3) Cover, base and rear panel all have M4 x 8 mm studs for earthing points.
4) Case supplied with 4 off plastic card guides - M5700203.

FIRST ANGLE PROJECTION

Designed by	Description	Date	Scale
L Clark	Unimet-Plus 5H	25/04/2012	1:3.5

METCASE ENCLOSURES
15 Brunel Way, Segensworth East, Fareham, Hampshire, UK. PO15 5TX
Tel: +44 (0)1489 583858 Email: metcase@okw.co.uk
www.metcase.com

Part Number	Issue	Sheet
M5625335	1	1 / 1

© OKW Enclosures Ltd (Date as shown). This drawing contains proprietary information of OKW Enclosures Ltd and is tendered subject to the following conditions. The information be retained in confidence, not be reproduced or copied, and not be used or incorporated in any product, unless permission is obtained in writing from OKW Enclosures Ltd.