Differential pressure gauge
Nominal size 63
Model A2G-mini

Applications

- For monitoring the differential pressure of air and dry, clean and non-aggressive gases
- Differential pressure monitoring in filters
- Overpressure monitoring in cleanrooms
- For very low pressures

Special features

- Optimal readability with minimal space requirements
- All-metal design
- Available as a built-in or add-on version
- All-metal design (built-in version)
- Simple and quick mounting
- Silicone-free



Differential pressure gauge with mounting bracket, model A2G-mini

Description

The model A2G-mini differential pressure gauge is used for monitoring differential pressures of the filter units in small and medium-sized central air-handling units. Further application cases are in industrial air extraction units and dust extraction plants as well as in the cleanroom industry. Its compact design and flush panel mounting enable an optimal integration in the enclosure structures of ventilation equipment.

The pure metal design of the built-in version – with the case from stainless steel and the measuring system and movement from copper alloy – ensures maximum hygiene. Due to its silicone-free materials the instrument can also be used in the painting industry and its applications.

The high IP68 ingress protection and the UV-stabilised window also enable operation in outdoor areas.

Data sheets showing similar products:
Differential pressure gauge Eco; model A2G-05; see data sheet PM 07.42
Differential pressure gauge; model A2G-10; see data sheet PM 07.40

Part of your business

Specifications

Differential pressure gauge, model A2G-mini	Built-in version	Add-on version
Version	■ Built-In version ■ Add-on version	
Nominal size in mm	63	
Measuring range	■ 0 ... 250 Pa ■ 0 ... 400 Pa ■ 0 ... 500 Pa ■ 0 ... 750 Pa ■ 0 ... 1,000 Pa ■ 0 ... 1,250 Pa ■ 0 ... 1,500 Pa ■ 0 ... 2,000 Pa ■ 0 ... 2,500 Pa ■ 0 ... 3,000 Pa ■ 0 ... 4,000 Pa ■ 0 ... 5,000 Pa ■ 0 ... 6,000 Pa ■ 0 ... 7,000 Pa ■ 0 ... 8,000 Pa ■ 0 ... 9,000 Pa ■ 0 ... 10,000 Pa	
Accuracy	±5 %	
Process connection	Back mount	Lower mount
	For hoses with inner diameter 4 ... 6 mm	
Pressure limitation	Steady: Full scale value Fluctuating: 0.9 x full scale value	
Temperature effect	When the temperature of the measuring system deviates from the reference temperature (+20 °C [+68 °C]): Max. ±0.5 %/10 K of full scale value	
Material		
Case	Stainless steel	
Case bottom	-	Plastic
Front bezel	■ Steel, black painted (other colours on request) ■ Stainless steel	Steel, black painted
Window	Plastic, transparent	
Process connection	Copper alloy	Plastic
Dial	Aluminium, scale angle 180°	
Pointer	Aluminium, black	
Movement, pressure element	Copper alloy	
Premissible temperatures		
Medium	Max. 60 °C [140 °F]	
Ambient	-20 … +60 °C [-4 … +140 °F]	
Ingress protection per IEC/EN 60529	IP68	
Weight	200 g	
Mounting	By means of mounting bracket	By means of mounting lugs

Dimensions in mm

Built-in version with mounting bracket, back mount

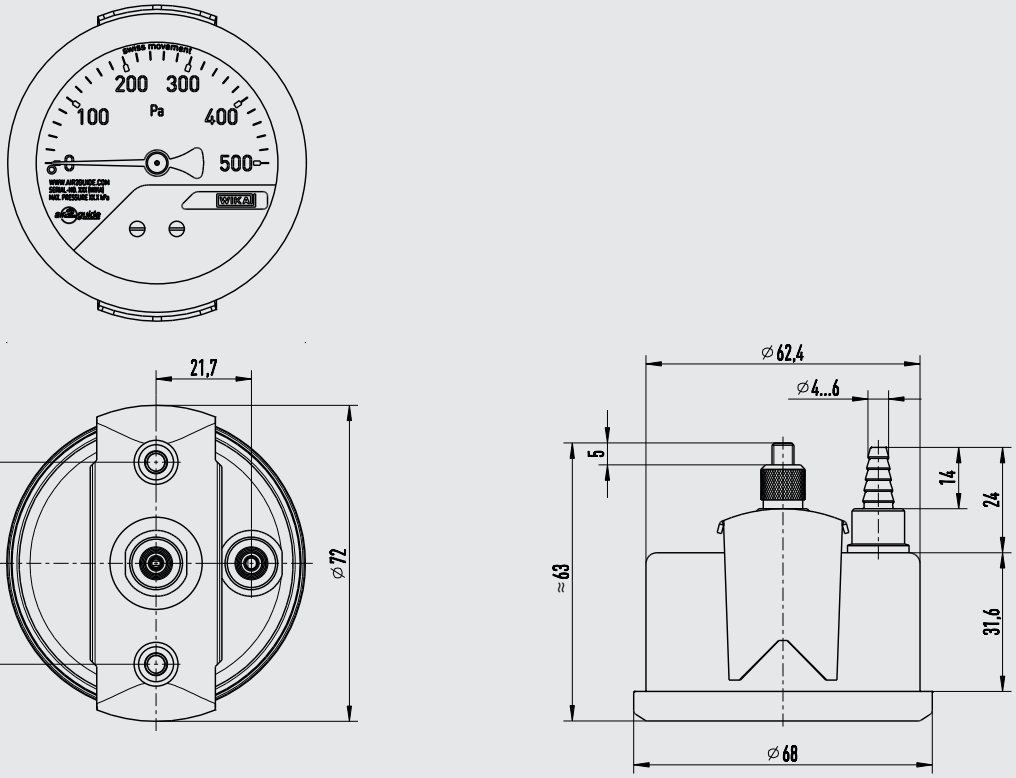

40409102.02

Add-on version with mounting lugs, lower mount

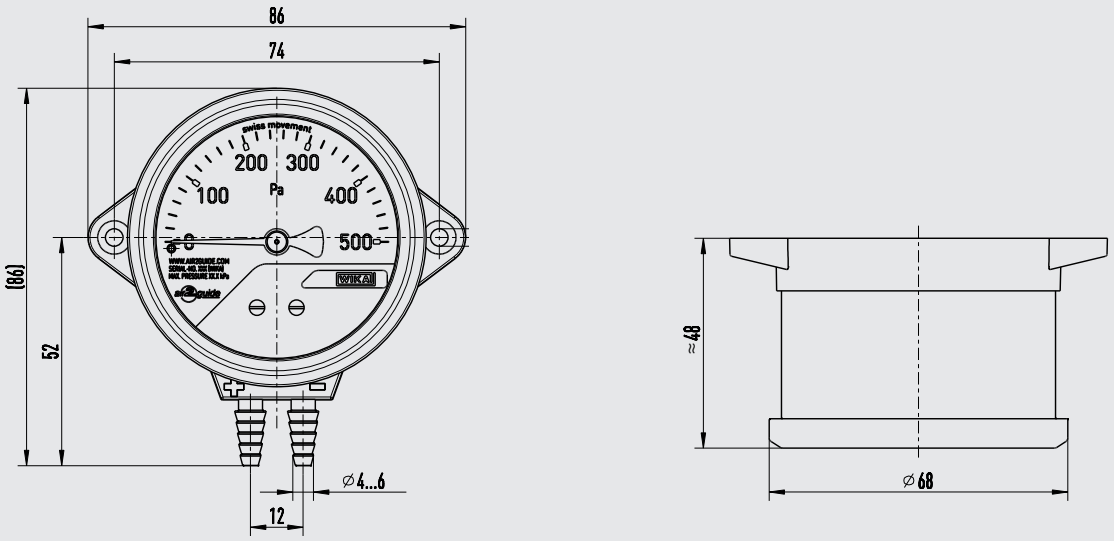

40424660.02

Accessories

Description		Order number
	**Measuring hoses**	
	PVC hose, inner diameter 4 mm, roll at 25 m	40217841
	PVC hose, inner diameter 6 mm, roll at 25 m	40217850
	Silicone hose, inner diameter 4 mm, roll at 25 m	40208940
	Silicone hose, inner diameter 6 mm, roll at 25 m	40208958
	**Duct connectors for measuring hoses Ø 4 … 6 mm**	40217507

Ordering information

Model / Version / Scale range / Options

© 03/2017 WIKA Alexander Wiegand SE & Co. KG, all rights reserved.
The specifications given in this document represent the state of engineering at the time of publishing.
We reserve the right to make modifications to the specifications and materials.

WIKA Alexander Wiegand SE & Co. KG
Alexander-Wiegand-Straße 30
63911 Klingenberg/Germany
Tel. +49 9372 132-0
Fax +49 9372 132-406
info@wika.de
www.wika.de