lumbergautomation
A BELDEN BRAND



Product: RKMWV/LED A 3-224

M8 Standard Sensor/Actuator Single-Ended Cordset: Female, angled, 3-pin, A-coded, translucent body, 10-30 V DC, 4 A, with 2xLEDs (PNP); PUR black cable, 3-wires, 0.34 mm²

Product Description

M8 Standard Sensor/Actuator Single-Ended Cordset: Female, angled, 3-pin, A-coded, translucent body, 10-30 V DC, 4 A, with 2xLEDs (PNP); PUR black cable, 3-wires, 0.34 mm²

Technical Drawing

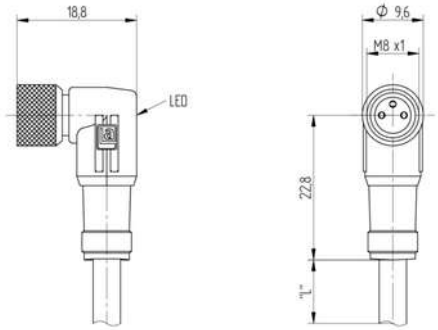

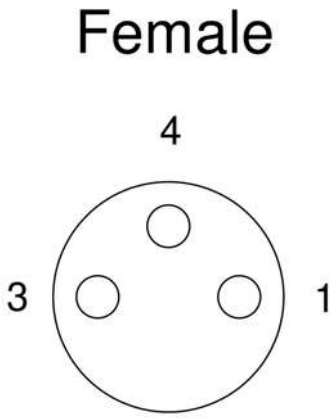

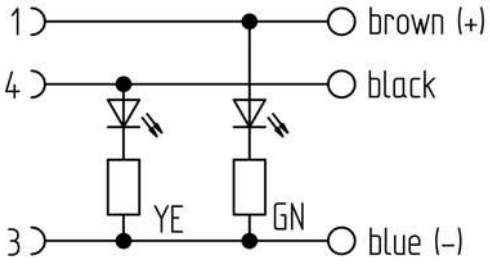

Technical Specifications

Face View

Pin 1	Pin 3	Pin 4
brown	blue	black

Technical Data

Product Family:	Sensor / Actuator Connectors

Product Sub Family:	M8 Standard
Brand:	Lumberg Automation
Connector Type:	Cordset, single ended
Type of Contact / Gender:	Female
Connector Design:	Angled
Number of Pins:	3
Coding:	A
Shielding:	Unshielded
Attachment Type:	Coupling Nut
Rated Voltage:	30 V
Rated Voltage (UL):	30 V DC
Rated Impulse Voltage:	0.5 kV
Operating Voltage:	10-30 V DC
Rated Current:	4 A
Rated Current (UL):	4 A
Contact Resistance:	≤ 10 mOhm
Insulation Resistance:	> 10^9 Ohm
Mating Cycles:	≤ 100
Ambient Temperature (Operation):	- 40 °C - + 90 °C
Operating Temperature (UL):	max. + 70 °C
Protection Degree / IP Rating:	IP65, IP67, IP69K
Design Standard:	IEC 61076-2-104
Pollution Degree:	3 acc. to DIN EN 60664-1 (VDE 0110-1)
Overvoltage Category:	III acc. to DIN EN 60664-1 (VDE 0110-1)

Materials

Contact Base Material:	CuSn
Contact Plating:	Cu/Au
Contact Bearer Material:	TPU
Contact Bearer Color:	Orange
Flammability Class (Contact Bearer):	UL 94 HB
Molded Body Material:	TPU
Molded Body Color:	Translucent
Flammability Class (Molded Body):	UL 94 HB
Attachment Material:	CuZn
Attachment Plating:	Nickel-plated
O-Ring Material:	FKM, green

Protection Circuitry

Function Indicator:	2xLEDs (PNP)

Additional Technical Data

Fastening Torque (Attachment):	M 8x1: 30 Ncm, hand-tight

Cable Data

Cable Number:	224
Number of Wires:	3
Minimal Bending Radius (Fixed Inst):	> 5 x D
Minimal Bending Radius (Flexible Inst):	> 10 x D
Cycles (Bending):	> 5 M
Cycles (Torsion):	> 5 M @ ± 360 °/1 m
Conductor material:	Cu
Cable Jacket Material:	PUR
Cable Jacket Color:	black matt similarly RAL 9005
Cable Diameter D:	ø 4.30 ± 0.20 mm
Wire Insulation Material:	PP
Insulated Wire Diameter:	ø 1.30 ± 0.10 mm

Ambient Temperature (Fixed Installation):	- 50 °C - + 80 °C
Ambient Temperature (Flex Installation):	- 25 °C - + 80 °C
Ambient Temperature (Drag Chain Inst):	- 25 °C - + 60 °C
UL Cable Type:	AWM: 20549
Flammability Class (Cable Jacket):	DIN EN 50265-2-2, VDE 0482-265-2-2, IEC 60332-2-2, CSA FT2
Cable Characteristics:	Good microbes and hydrolysis resistance; Mainly plasticizer diffusion free; Exclusion of PVC and silicone; Free of lacquer wetting disturbing substances; Coldness Flexibilty

Approvals

UL-File:	E315587
UL:	UL 2238; cURus

Safety & Environmental Compliance

RoHS Compliant:	yes

Resistances

Halogenfree:	DIN EN 50267-2-1, IEC 60754-1, VDE 0482-267-2-1
Oil Resistance:	Good chemical and oil resistance

Notes

Protection Degree / IP Rating Note:	only if mounted and locked in combination with Hirschmann / Lumberg Automation connector
Note Derating:	Notice derating
Note:	Do not connect or disconnect under load.

Variants

Item #	Item Description	Cable Length
105228	RKMWV/LED A 3-224/0,6 M	0.6 m
44064	RKMWV/LED A 3-224/1 M	1 m
14007	RKMWV/LED A 3-224/2 M	2 m
44432	RKMWV/LED A 3-224/3 M	3 m
14005	RKMWV/LED A 3-224/5 M	5 m
14006	RKMWV/LED A 3-224/10 M	10 m
44385	RKMWV/LED A 3-224/15 M	15 m
92476	RKMWV/LED A 3-224/20 M	20 m
934636074	RKMWV/LED A 3-224/25 M	25 m
15378	RKMWV/LED A 3-224/30 M	30 m

© 2019 Belden, Inc

All Rights Reserved.

Although Belden makes every reasonable effort to ensure their accuracy at the time of this publication, information and specifications described here in are subject to error or omission and to change without notice, and the listing of such information and specifications does not ensure product availability.

Belden provides the information and specifications herein on an "ASIS" basis, with no representations or warranties, whether express, statutory or implied. In no event will Belden be liable for any damages (including consequential, indirect, incidental, special, punitive, or exemplary damages) whatsoever, even if Belden has been advised of the possibility of such damages, whether in an action under contract, negligence or any other theory, arising out of or in connection with the use, or inability to use, the information or specifications described herein.

All sales of Belden products are subject to Belden's standard terms and conditions of sale.

Belden believes this product to be in compliance with all applicable environmental programs as listed in the data sheet. The information provided is correct to the best of Belden's knowledge, information and belief at the date of its publication. This information is designed only as a general guide for the safe handling, storage, and any other operation of the product itself or the one that it becomes a part of. The Product Disclosure is not to be considered a warranty or quality specification. Regulatory information is for guidance purposes only. Product users are responsible for determining the applicability of legislation and regulations based on their individual usage of the product.