Brand of NTN corporation

Technical data

UCF209

Bearing units



Grey cast housing, radial insert ball bearing with socket set screws,seal with slinger

KIT CONTENT

UC209G2, F209

VISUAL (S)

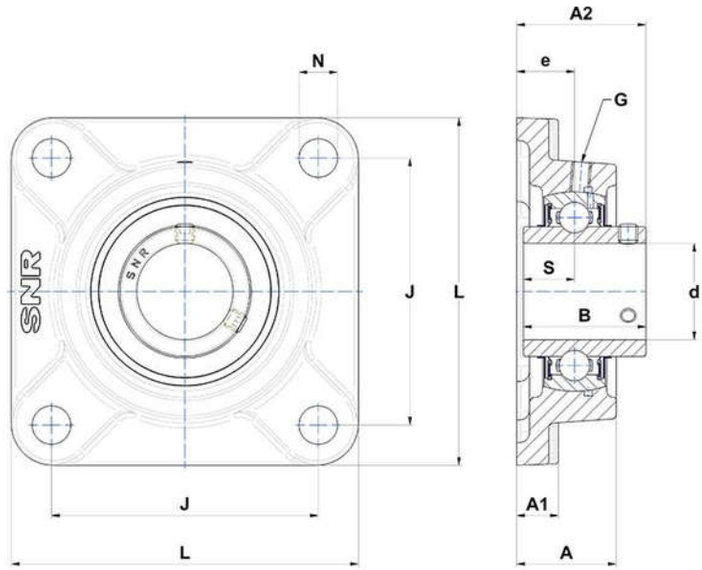

PRODUCT DEFINITION

Brand	SNR
A - Housing height	38 mm
A1 - Housing foot height / flange height	16 mm
A2 - Total height from mounting surface	52,2 mm
B - Width of Inner Ring	49,2 mm
d - Shaft diameter	45 mm

PRODUCT DEFINITION	
e - Distance mounting surface to bearing center	22 mm
G - Grease fitting	M6x1
J - Mounting holes distance	105 mm
L - Housing width / diameter	137 mm
N - Mounting hole dimension	16 mm
S - Distance front side/bearing centre	19 mm

PRODUCT PERFORMANCE	
C - Dynamic load rating	31850000 mN
C0 - Static load rating	20800000 mN
Operating temperature min.	253,15 °K
Operating temperature max.	373,15 °K

OTHER FEATURES	
Mass	2,12 kg
Recommended tightening torque for set screw	11.5 N-m