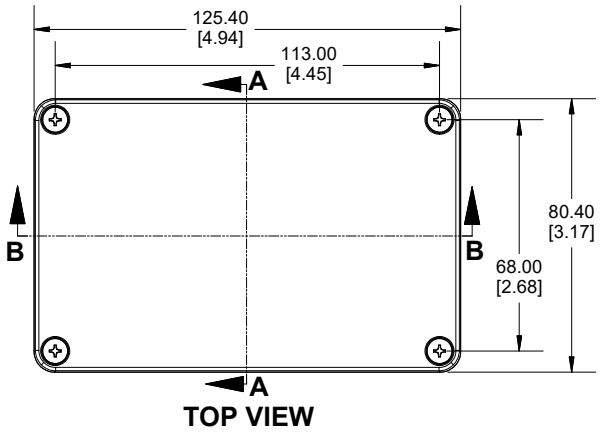

TOP VIEW

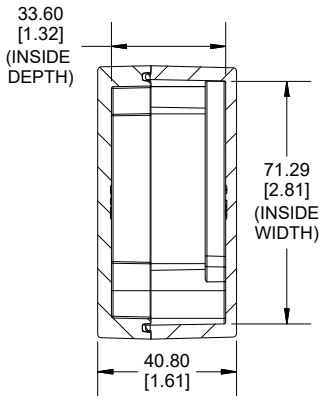

SECTION A-A
END VIEW

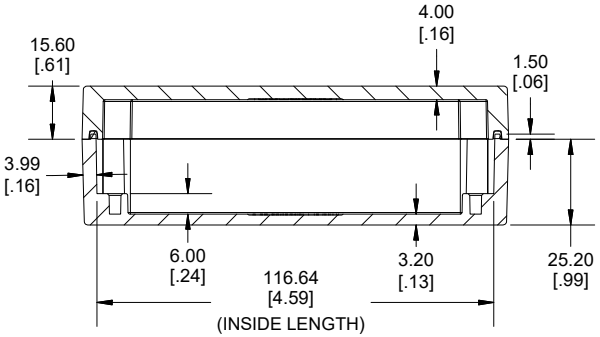

SECTION B-B
SIDE VIEW

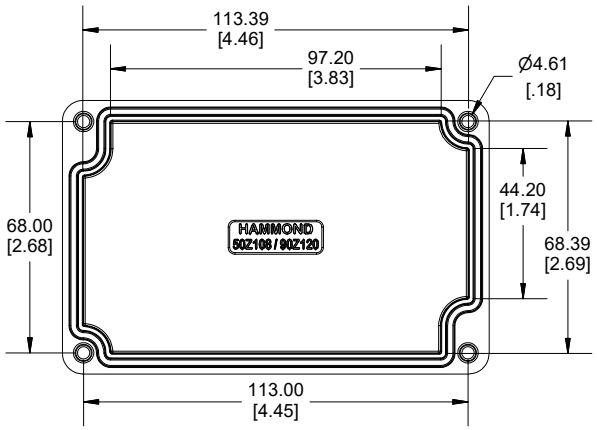

INSIDE LID

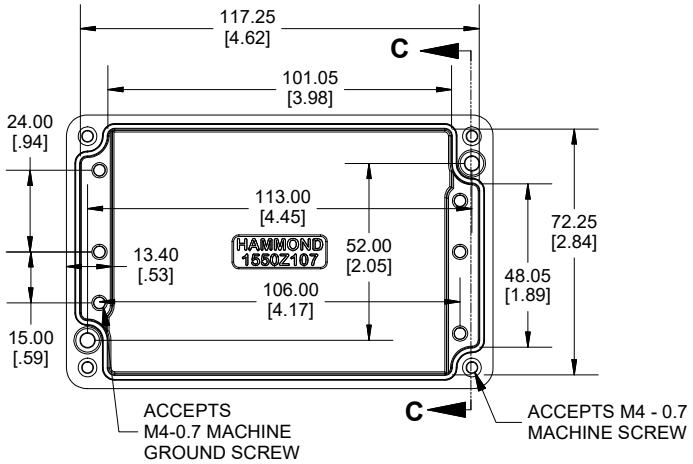

INSIDE BOX

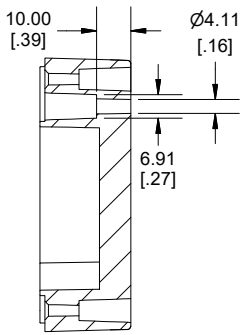

SECTION C-C
MOUNTING HOLE

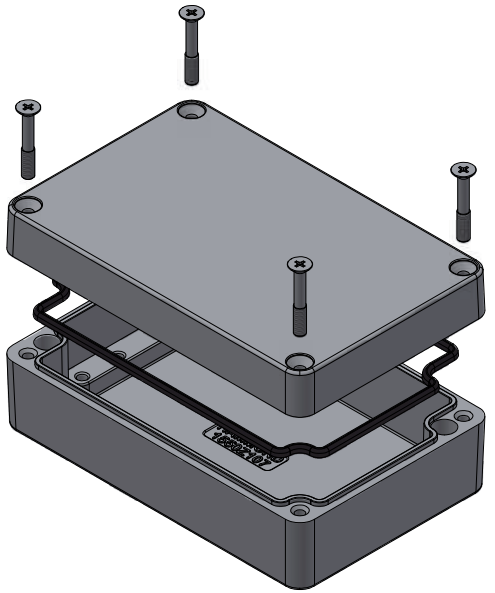

c UL US LISTED
FILE #E71073
NEMA 4, 4X

Enclosures can be Factory Modified (Milling, Drilling, Printing etc.)
Contact Factory (modshop@hammfg.com) for quotes
Solid models of this enclosure available in .stp or .x_t
(Part number and text placement/orientation on our products are subject to change, we do not recommend using them as a locating reference for modification purposes)

NOTE
Purchased assembly includes box, lid, silicone gasket, and 4 cover screws. Box and lid are made from Diecast Aluminum Alloy.
Recommended Cover screw torque 5-7.5 lbf.in (50 -75 cN.m)

PART NUMBERS	
1550Z107 Enclosure	
Natural Finish Enclosure	1550Z107
Black Textured Enclosure	1550Z107BK
ACCESSORIES	
Stainless Steel Cover screws [M4 - 0.7 x 25mm] (50 Pack)	SC1550Z107-50
Copper plate Ground Hardware M4 - 0.7 X 6mm screw M4 Washer (50 Pack)	SCGM4-50
Pre-Formed Silicone Gasket (2 Pack)	1550Z107GASKET

Dimensions:
mm
[inches]

HAMMOND®

1550Z107

www.hammondmfg.com

REV: 08.07.2024