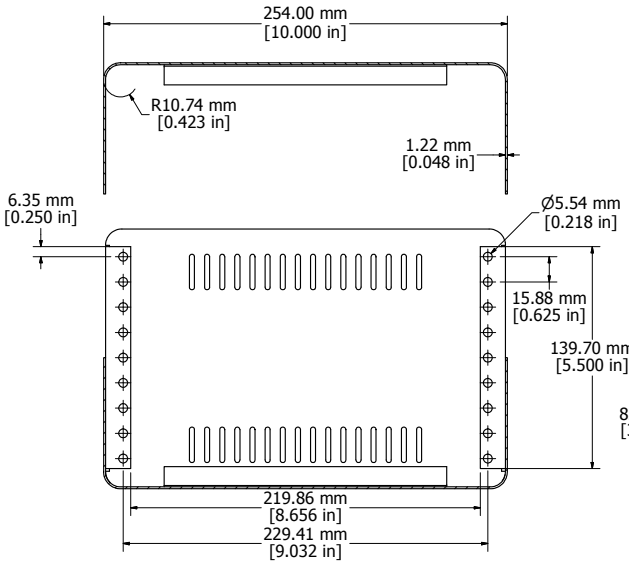

SECTION GG-GG

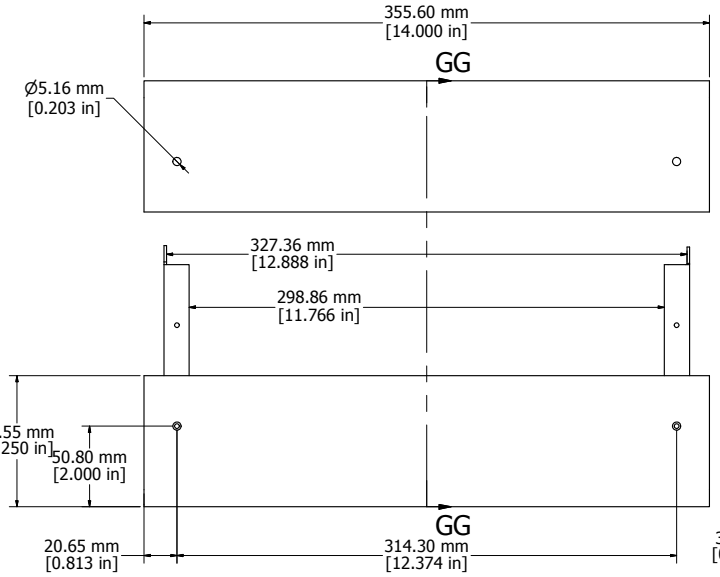

ASSEMBLY - VIEW FROM SIDE (OPEN)

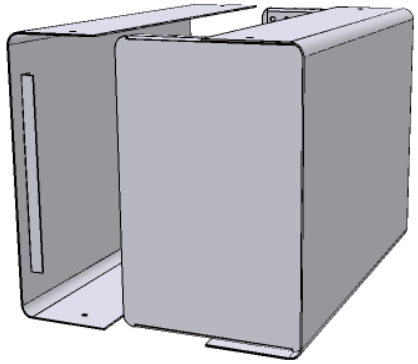

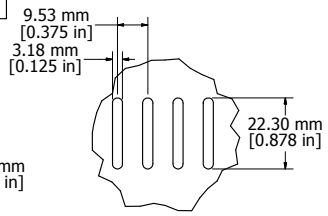

DETAIL HH





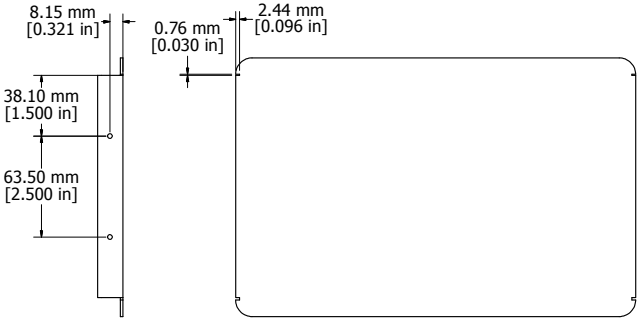

FRONT PANEL - VIEW FROM OUTSIDE

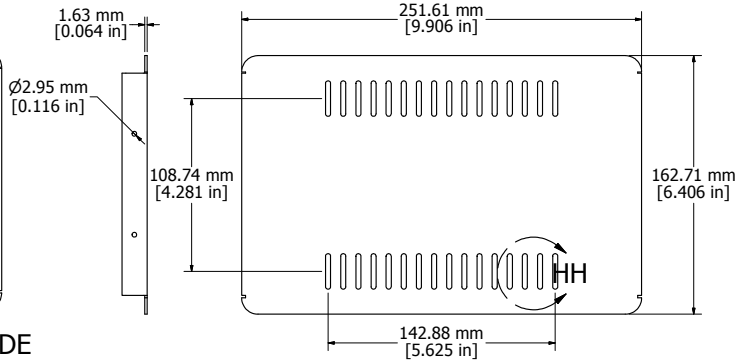

REAR PANEL - VIEW FROM OUTSIDE

- 20 GAUGE STEEL BODY PAINTED (RAL 7032)
- EIGHT 6-32 NICKEL PLATED SCREWS
- 0.064" THICK ALUMINUM PANELS PAINTED (FRONT PANEL BLACK, REAR PANEL RAL 7032)
- FOUR SELF ADHESIVE RUBBER FEET
EXTRA SCREWS - 1421J6 (6-32 x 1/4 SHEET METAL SCREWS)

Contact Factory mjm@hammondmfg.com for quotes
Enclosures can be Factory Modified (Milling, Drilling, Printing etc.)
Solid models of this enclosure available in STEP or IGES.

HAMMOND MANUFACTURING™

1401K

www.hammondmfg.com