ACE rotary dampers are maintenance-free and ready to install. The damping direction of the rotary dampers with continuous rotation can be clockwise, counter clockwise, or in both directions. The outer body is either of metal or plastic. Rotary dampers with continuous rotation ensure the controlled opening and closing of small hoods, compartments and drawers. They can damp directly at the rotation point or linearly by means of a rack and pinion, in order to produce a smooth and even movement. Sensitive components remain unstressed. The harmonious gentle movement process enhances the quality and value of the product. Plastic racks (modules 0.5 to 1.0) are available for the rotary dampers with pinions. Particularly suitable for flaps, closing hoods, CD-player drawers, vehicle glove compartments, the furniture industry etc.

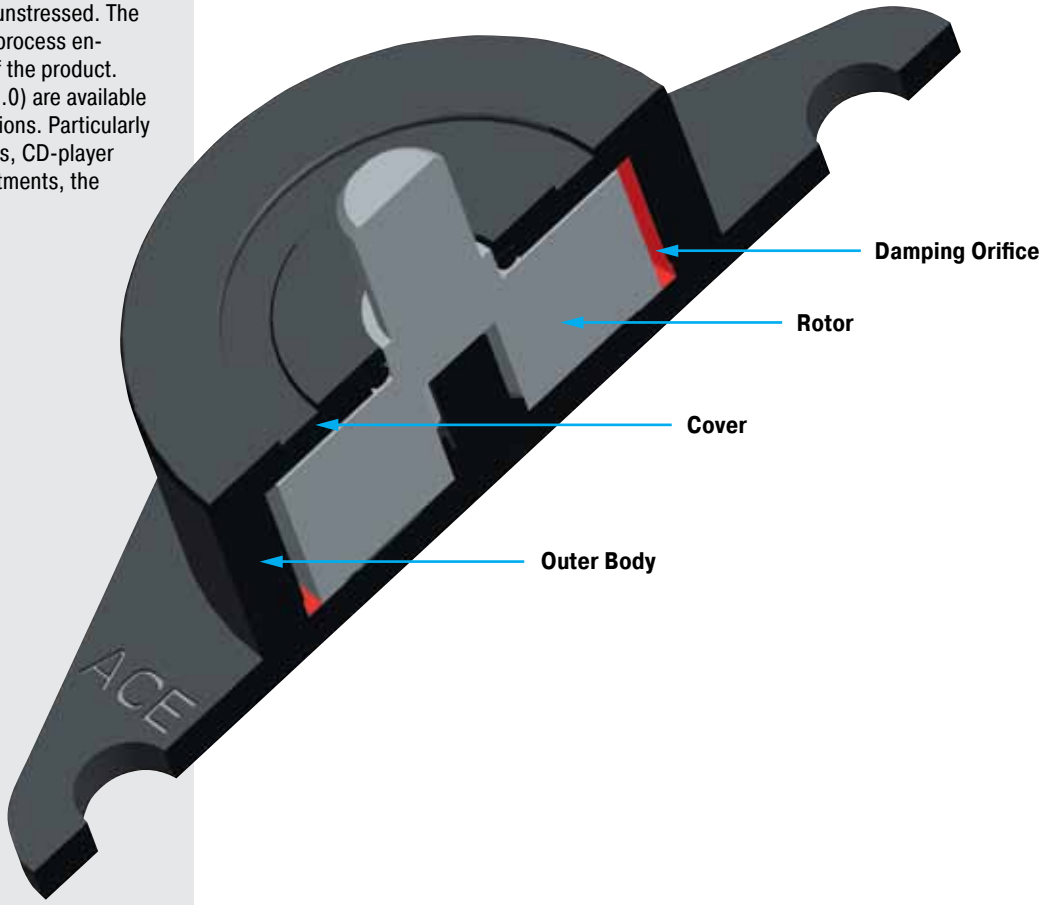

Function: In rotary dampers with continuous rotation, a fluid damping is produced by the shearing of thin silicon layers between the surfaces of a rotor and a stator. The damping moment is determined by the viscosity of the fluid and the dimensioning of the throttle gap. The specified damping moments refer to a speed of 20 rpm and an ambient temperature of 23 °C.



Note: In general, ACE rotary dampers are tested for a service life of 50 000 cycles. Even after this time, the dampers still produce over approx. 80 % of their original damping moment. The service life may be significantly higher or lower, depending on the application. Much higher service lives have however been achieved in practice.

Issue 1.2013 Specifications subject to change

FRT-E2



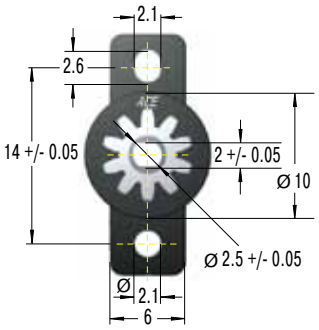

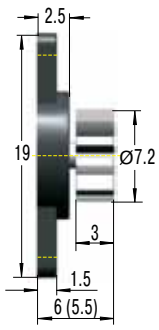

Dims. in ( ) without gear

Technical Data

Pressure angle:	20 °
Material:	Polycarbonate plastic
Tooth:	Involute
P.C.D.:	6 mm
No. of teeth:	10
Module:	[1] 0.6
Operating temperature range:	0 °C to 50 °C

FRT-E2 (at 23 °C)

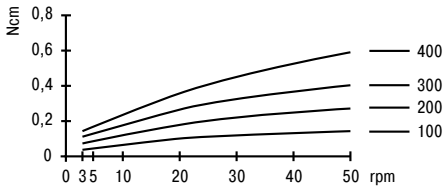

FRT-E2 (at 20 rpm)

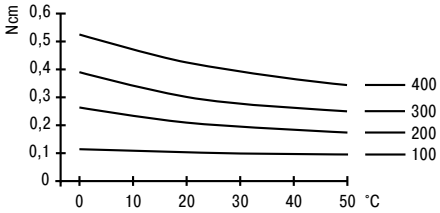

[1] A 250 mm long plastic rack is available for use with this part see page 124.

Damping in both Directions of Rotation	Nominal 20 rpm. 23 °C
Without Gear	Damping Torque **Ncm**
FRT-E2-100	0.10 +/- 0.05
FRT-E2-200	0.20 +/- 0.07
FRT-E2-300	0.30 +/- 0.08
FRT-E2-400	0.40 +/- 0.10

Damping in both Directions of Rotation	Nominal 20 rpm. 23 °C
With Gear	Damping Torque **Ncm**
FRT-E2-100-G1	0.10 +/- 0.05
FRT-E2-200-G1	0.20 +/- 0.07
FRT-E2-300-G1	0.30 +/- 0.08
FRT-E2-400-G1	0.40 +/- 0.10

FRT-G2



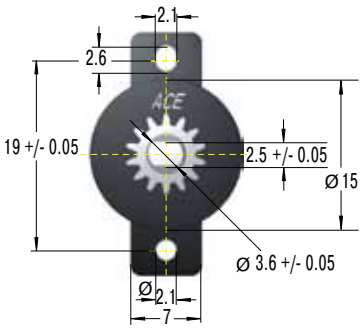

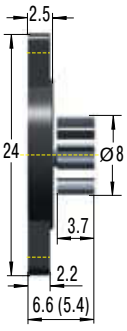

Dims. in ( ) without gear

Technical Data

Pressure angle:	20 °
Material:	Polycarbonate plastic
Tooth:	Involute
P.C.D.:	7 mm
No. of teeth:	14
Module:	[1] 0.5
Operating temperature range:	0 °C to 50 °C

FRT-G2 (at 23 °C)

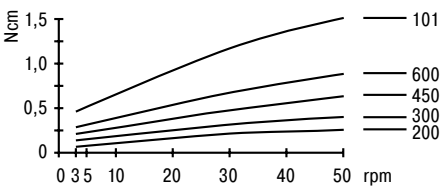

FRT-G2 (at 20 rpm)

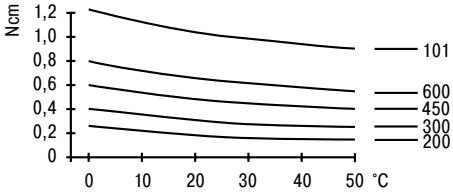

[1] A 250 mm long plastic rack is available for use with this part see page 124.

Damping in both Directions of Rotation	Nominal 20 rpm. 23 °C
Without Gear	Damping Torque **Ncm**
FRT-G2-200	0.20 +/- 0.07
FRT-G2-300	0.30 +/- 0.08
FRT-G2-450	0.45 +/- 0.10
FRT-G2-600	0.60 +/- 0.12
FRT-G2-101	1.00 +/- 0.20

Damping in both Directions of Rotation	Nominal 20 rpm. 23 °C
With Gear	Damping Torque **Ncm**
FRT-G2-200-G1	0.20 +/- 0.07
FRT-G2-300-G1	0.30 +/- 0.08
FRT-G2-450-G1	0.45 +/- 0.10
FRT-G2-600-G1	0.60 +/- 0.12
FRT-G2-101-G1	1.00 +/- 0.20

Issue 1.2013 Specifications subject to change

FRT-C2 and FRN-C2



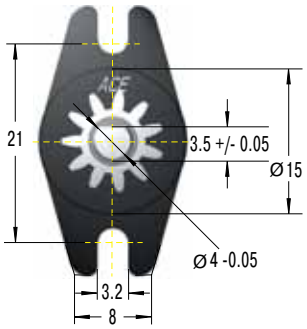

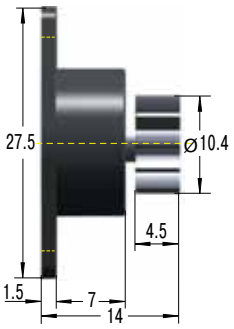

Technical Data

Pressure angle: 20 °
Material: Polycarbonate plastic
Tooth: Involute
P.C.D.: 8.8 mm
No. of teeth: 11
Module: [1] 0.8
Operating temperature range: 0 °C to 50 °C

FRT/N-C2 (at 23 °C)

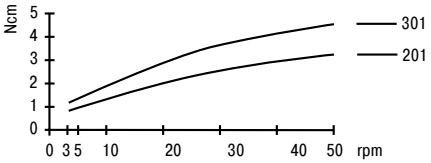

FRT/N-C2 (at 20 rpm)

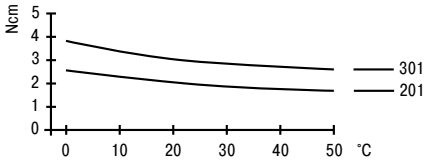

[1] A 170 mm long flexible plastic rack and a 250 mm long rigid rack are available for use with this part see page 124.

				Nominal 20 rpm. 23 °C
Bidirectional Damping	**Right-Hand Damping** (clockwise)	**Left-Hand Damping** (anti-clockwise)	Gear	Damping Torque **Ncm**
FRT-C2-201	FRN-C2-R201	FRN-C2-L201	without	2 +/- 0.6
FRT-C2-201-G1	FRN-C2-R201-G1	FRN-C2-L201-G1	with	2 +/- 0.6
FRT-C2-301	FRN-C2-R301	FRN-C2-L301	without	3 +/- 0.8
FRT-C2-301-G1	FRN-C2-R301-G1	FRN-C2-L301-G1	with	3 +/- 0.8

FRT-D2 and FRN-D2



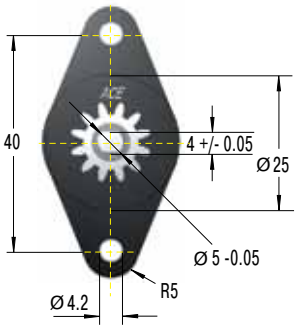

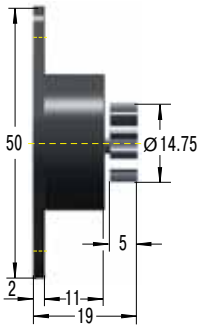

Technical Data

Pressure angle: 20 °
Material: Polycarbonate plastic
Tooth: Involute
P.C.D.: 12 mm
No. of teeth: 12
Module: [1] 1.0
Operating temperature range: 0 °C to 50 °C

FRT/N-D2 (at 23 °C)

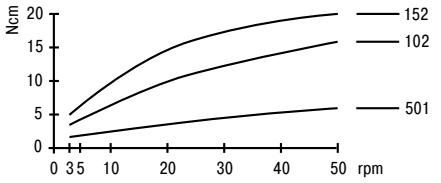

FRT/N-D2 (at 20 rpm)

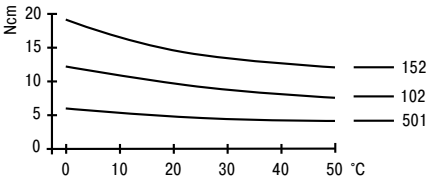

[1] A 250 mm and 500 mm long plastic rack are available for use with this part see page 124.

				Nominal 20 rpm. 23 °C
Bidirectional Damping	**Right-Hand Damping** (clockwise)	**Left-Hand Damping** (anti-clockwise)	Gear	Damping Torque **Ncm**
FRT-D2-102	FRN-D2-R102	FRN-D2-L102	without	10 +/- 2
FRT-D2-102-G1	FRN-D2-R102-G1	FRN-D2-L102-G1	with	10 +/- 2
FRT-D2-152	FRN-D2-R152	FRN-D2-L152	without	15 +/- 3
FRT-D2-152-G1	FRN-D2-R152-G1	FRN-D2-L152-G1	with	15 +/- 3
FRT-D2-501	FRN-D2-R501	FRN-D2-L501	without	5 +/- 1
FRT-D2-501-G1	FRN-D2-R501-G1	FRN-D2-L501-G1	with	5 +/- 1

Issue 1.2013 Specifications subject to change

FDT-47 to 70



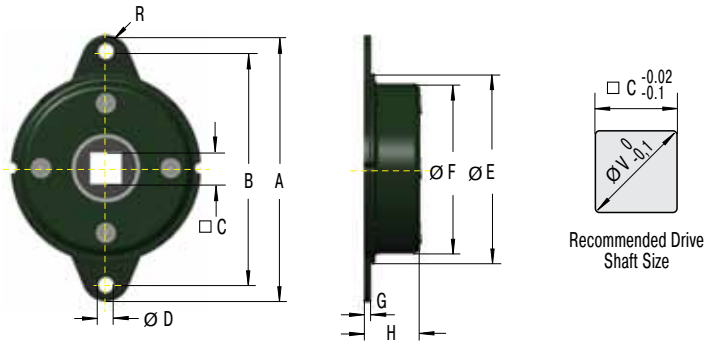

Technical Data

Max. weight:	0.11 kg
Material:	Steel. Output shaft sleeve: Nylon
Rotational speed max.:	50 rpm
Cycle rate max.:	12 cycles per minute
Operating temperature range:	-10 °C to 50 °C

FDT (at 23 °C)

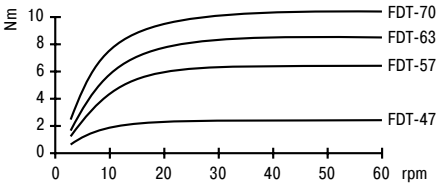

FDT (at 20 rpm)

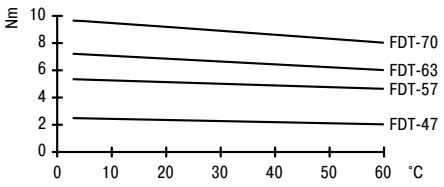

There is no support for the output shaft within the damper structure. External support must be provided for the shaft.

Damping in both Directions of Rotation

Type	at 20 rpm. 23 °C Damping Torque Nm	Dimensions A	B	C	D	E	F	G	H	R	V
FDT-47	2.0 +/- 0.3	65	56	8	4.5	47	42.8	1.6	10.3	4.5	10
FDT-57	4.7 +/- 0.5	79	68	10	5.5	57	52.4	1.6	11.2	5.5	13
FDT-63	6.7 +/- 0.7	89	76	12.5	6.5	63	58.6	1.6	11.3	6.5	17
FDT-70	8.7 +/- 0.8	95	82	12.5	6.5	70	65.4	1.6	11.3	6.5	17

FDN-47 to 70



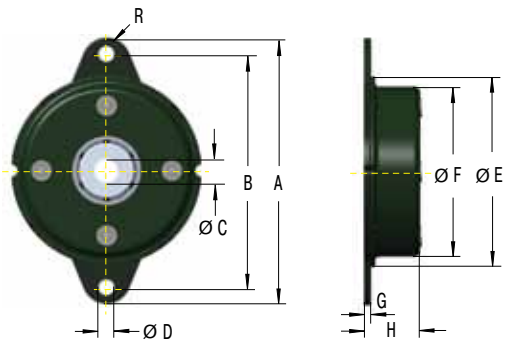

Technical Data

Max. weight:	0.12 kg
Material:	Steel. Output shaft sleeve: Nylon
Rotational speed max.:	50 rpm
Cycle rate max.:	12 cycles per minute
Operating temperature range:	-10 °C to 50 °C

There is no support for the output shaft within the damper structure. External support must be provided for the shaft.

Recommended shaft details:

for FDN-47: Ø 6 $^{+0}_{-0.03}$

for FDN-57 to FDN-70: Ø 10 $^{+0}_{-0.03}$

Hardness > HRC55, surface smoothness R_Z < 1 µm

Right-Hand Damping (clockwise)	Left-Hand Damping (anti-clockwise)	at 20 rpm. 23 °C Damping Torque Nm	Dimensions A	B	C	D	E	F	G	H	R
FDN-47-R	FDN-47-L	2.0 +/- 0.3	65	56	6	4.5	47	42.8	1.6	10.3	4.5
FDN-57-R	FDN-57-L	5.5 +/- 0.3	79	68	10	5.5	57	52.4	1.6	14	5.5
FDN-63-R	FDN-63-L	8.5 +/- 0.8	89	76	10	6.5	63	58.6	1.6	13.9	6.5
FDN-70-R	FDN-70-L	11.0 +/- 1.0	95	82	10	6.5	70	65.4	1.6	13	6.5

Issue 1.2013 Specifications subject to change